(Table lamp)

Touch Control Dimmable Set of 2 Ceramic Table lamp And 2 Fast USB Charging Ports

■Specification

Voltage: 110-130V
Wattage: 60 Watt Max
Material:Ceramic
Color:Grey mud
USB Port: 5V/2.1A
USB Ports: Two
Lamp holder: E26
Bulb info: A19 6W 2700K
Touch control: 4 settings (Low,Medium, High, Off)
Dimensions:12in/280mm(D)*21.75in/554mm(H)
Shade size:12in/280mm(D)*9in/228mm(H)
Base size:4.72in/120mm(D)*1.38in/35mm(H)
Wire Length: 59in/1500mm
Usage: Indoor use only

■Package Include

2 x Lampshade
2 x Lamp Base
4 x Metal rings
2 x Finial
2 x Harp
1 x User Manual

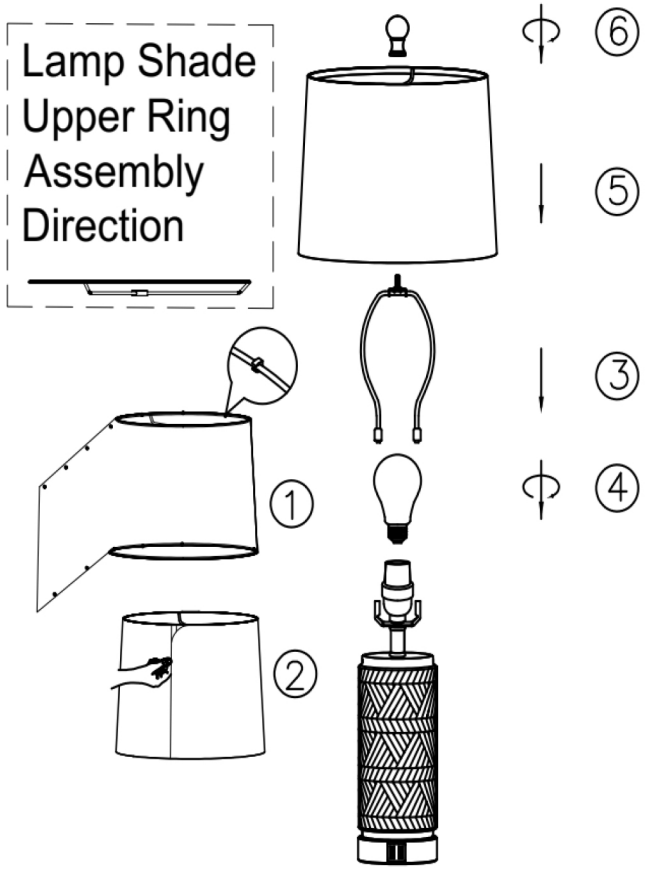

■Easy Installation

1.Put the bottom ring on the table,then attach 3/4 lampshade around the bottom ring.
2.Attach the top ring to the upper lampshade and the rest 1/4 lampshade to the bottom ring.Then fix the place where the lampshade is joined end to end.
3.Attach two legs of the lamp harp to the saddle.
4.Install the bulb.
5.Fix the lampshade on the lamp harp.
6.Screw the finial to secyre the lampshade.

■ Attention

1.If you want to change the 2700K vintage Led bulb included, incandescent light bulbs less than 60W are greatly recommended. Not all Led bulbs are fully compatible with the dimmer system of the lamp, so it may cause to flicker or lose dimming function with other Led bulbs.
2.The bulb will increase the brightness when it is reaching its lifespan or has partial short-circuit. At that moment, please switch off, change a bulb and use it as you would normally.
3.The total current of two usb charging ports is 2.1A. If two devices are charged at the same time, the current will be distributed.
4.Please shut off the power and unplug it before you screw in a new bulb.
5.Don't put the lamp in overheating working condition or cast it into fire.