SKU:W00588

THE BED
ASSEMBLY INSTRUCTIONS

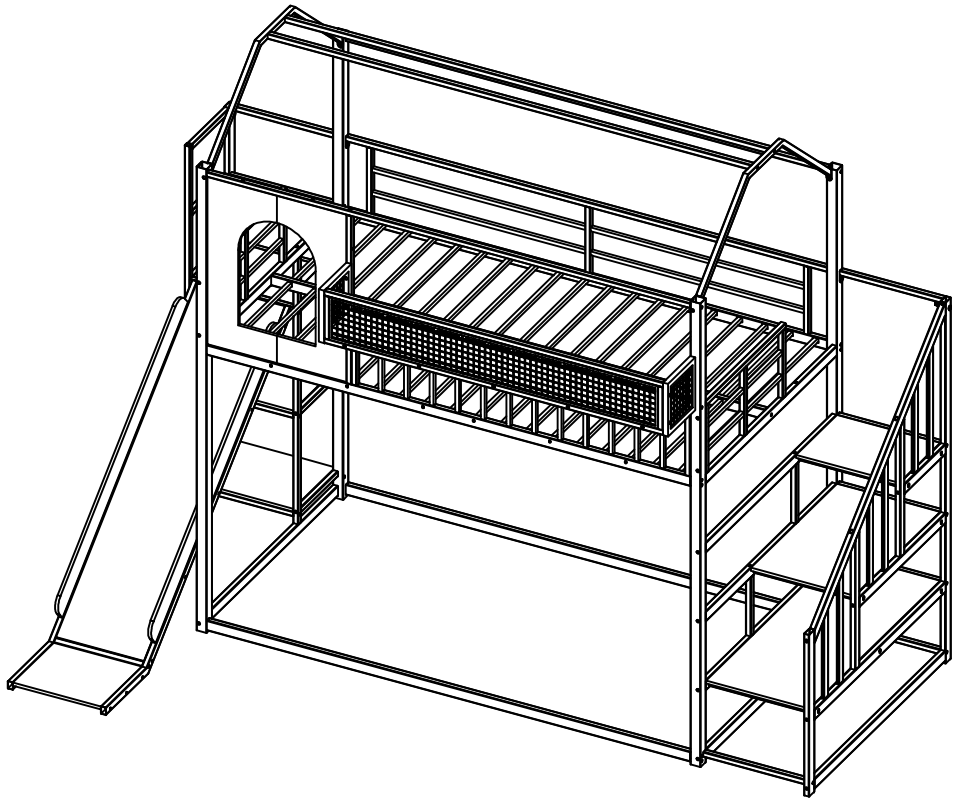

SAFETY WARNINGS AND GENERAL NOTES:

1. Follow the information on the warnings on the bunk bed end structure and on the carton. Do not remove the warning label from the bed.
2. Always use the recommended size mattress on mattress support, or both, to help prevent the likelihood of entrapment or falls.
3. Do not allow children under 6 years of age to use the upper bunk.
4. Periodically check and ensure the guardrail, ladder and other components are in their proper position, free from damage, and all connectors are tight.
5. Do not allow horseplay on or under beds.
6. Always prohibit jumping on the bed.
7. Prohibit more than one person on upper bunk.
8. Always use the ladder for entering and leaving the upper bunk.
9. Do not use substitute parts. Contact the manufacturer or dealer for replacement parts.
10. Use of a night-tight may provide added safety precaution for a child using the upper bunk.
11. Always use guardrails on both long sides of the upper bunk.
12. If the bunk bed will be placed next to a wall, the guardrail that runs the full length of the bed should be placed against the wall to prevent entrapment between the bed and the wall.
The use of water or sleep flotation mattresses is prohibited.
13. **STRANGULATION HAZARD**-Never attach or hang items to any part of the bunk bed that are not designed for use with the bed; for example, but not limited to, hooks, belts and jump ropes.
14. Keep these instructions for future reference.
15. We recommend assembling your bunk bed on the shipping carton to protect your floor or carpet.
16. Be certain all staples are out of the box before beginning assembly on the shipping carton.
17. USE ONLY MATTRESSES WHICH ARE AS THE TABLE BELOW ON UPPER AND ON LOWER BUNKS.
Up bed (bunk bed and tribed included)

Mattress size	Length	Width	Thickness
TWIN Standard	74"-75"	38"-39"	6"

18. SURFACE OF MATTRESS MUST BE AT LEAST 5"(127MM) BELOW THE UPPER EDGE OF GUARDRAILS.
19. Replacement Parts:
Replacement Parts, including additional guardrails, may be obtained from any of our （Shenzhen Yuefeng Zhiqi Technology Co., Ltd）dealers.

Bed parts view

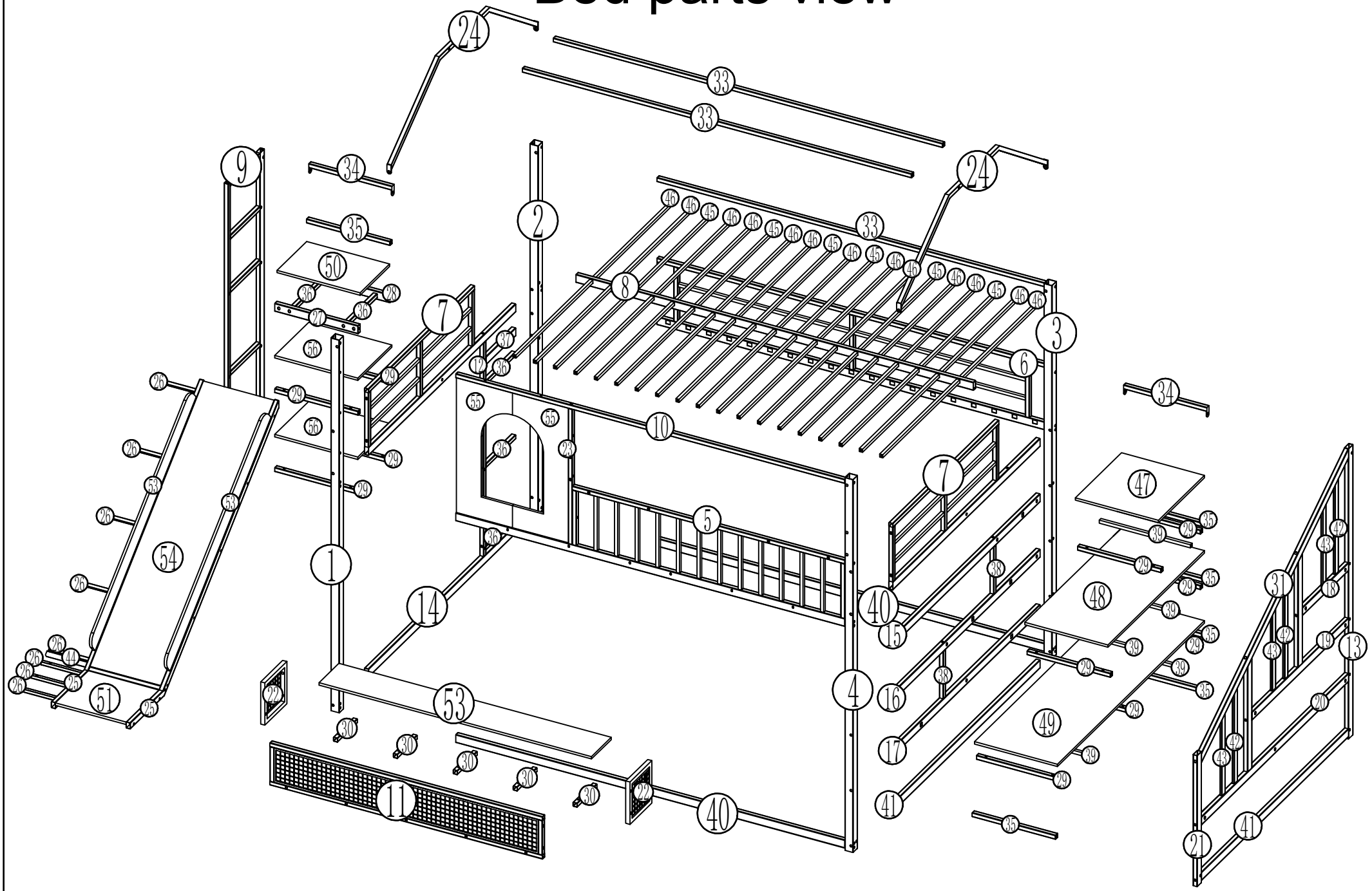

Part List

 1-1pcs	 2-1pcs	 3-1pcs	 4-1pcs	 5-1pcs	 6-1pcs	 7-2pcs	8-1pcs
 9-1pcs	10-1pcs	 11-1pcs	12-1pcs	13-1pcs	14-1pcs	15-1pcs	16-1pcs
17-1pcs	 18-1pcs	 19-1pcs	 20-1pcs	 21-1pcs	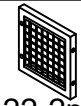 22-2pcs	23-1pcs	 24-2pcs
 25-2pcs	26-8pcs	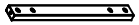 27-1pcs	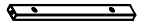 28-1pcs	29-11pcs	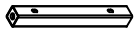 30-5pcs	31-1pcs	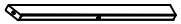 32-2pcs
33-3pcs	 34-2pcs	 35-6pcs	 36-5pcs	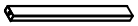 37-1pcs	 38-2pcs	 39-5pcs	40-2pcs
41-2pcs	42-3pcs	43-3pcs	44-1pcs	45-6pcs	46-13pcs	47-1pcs	48-1pcs
49-1pcs	50-1pcs	51-1pcs	52-2pcs	53-1pcs	54-1pcs	55-2pcs	56-2pcs

Hardware List

C 8*35 71PCS	H 4*50 16PCS	D 8*55 72PCS	E 6*25 28PCS	B 8*18 2PCS	F 8*18 20PCS	K 38PCS	R 4*25 32PCS	G 4*35 4PCS	Y 6*30 16PCS	W 6*3 16PCS	O 1PCS	Z 2PCS	M 1PCS	L M8=2PCS M6=1PCS

Step 1

Attention

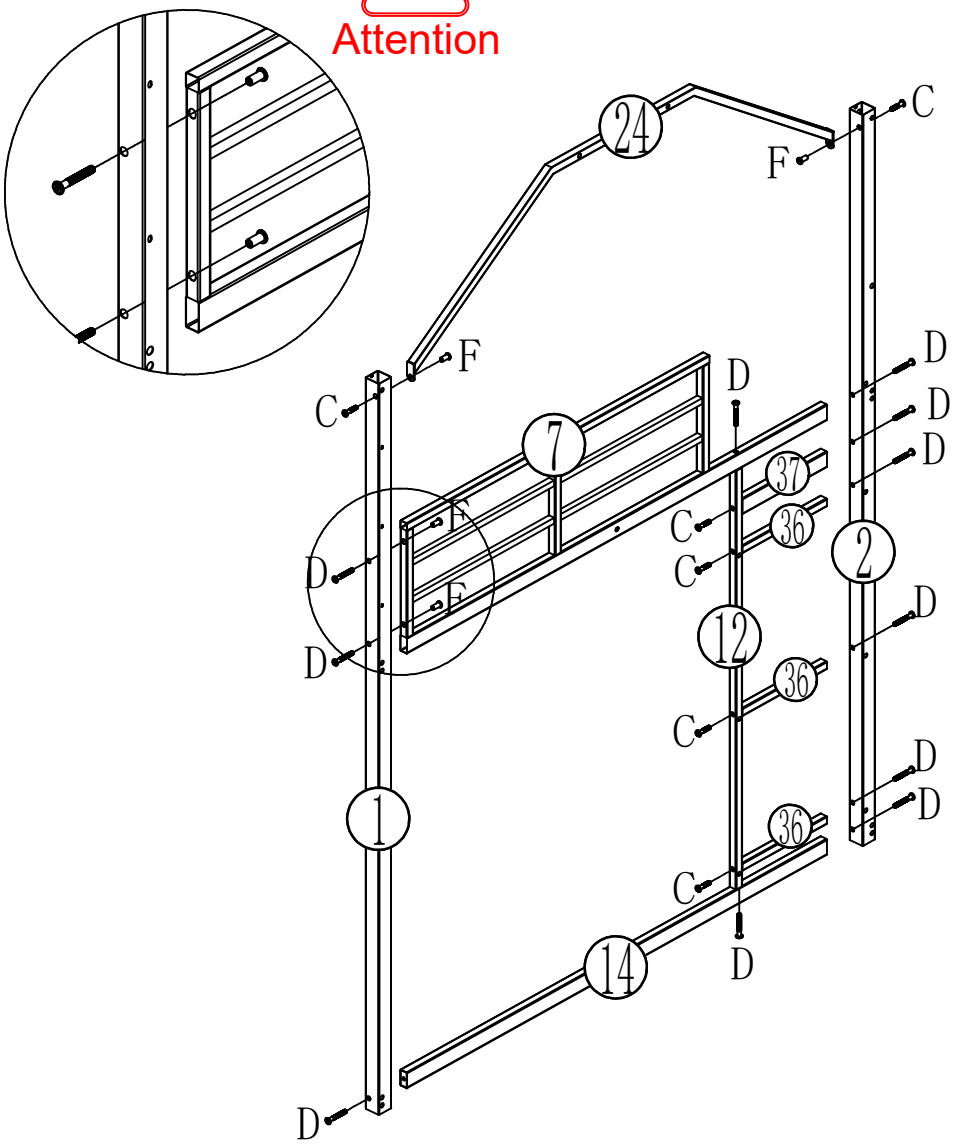

D 8*55-11PCS	C 8*35-6PCS	F 8*18-4PCS	L

Step 2

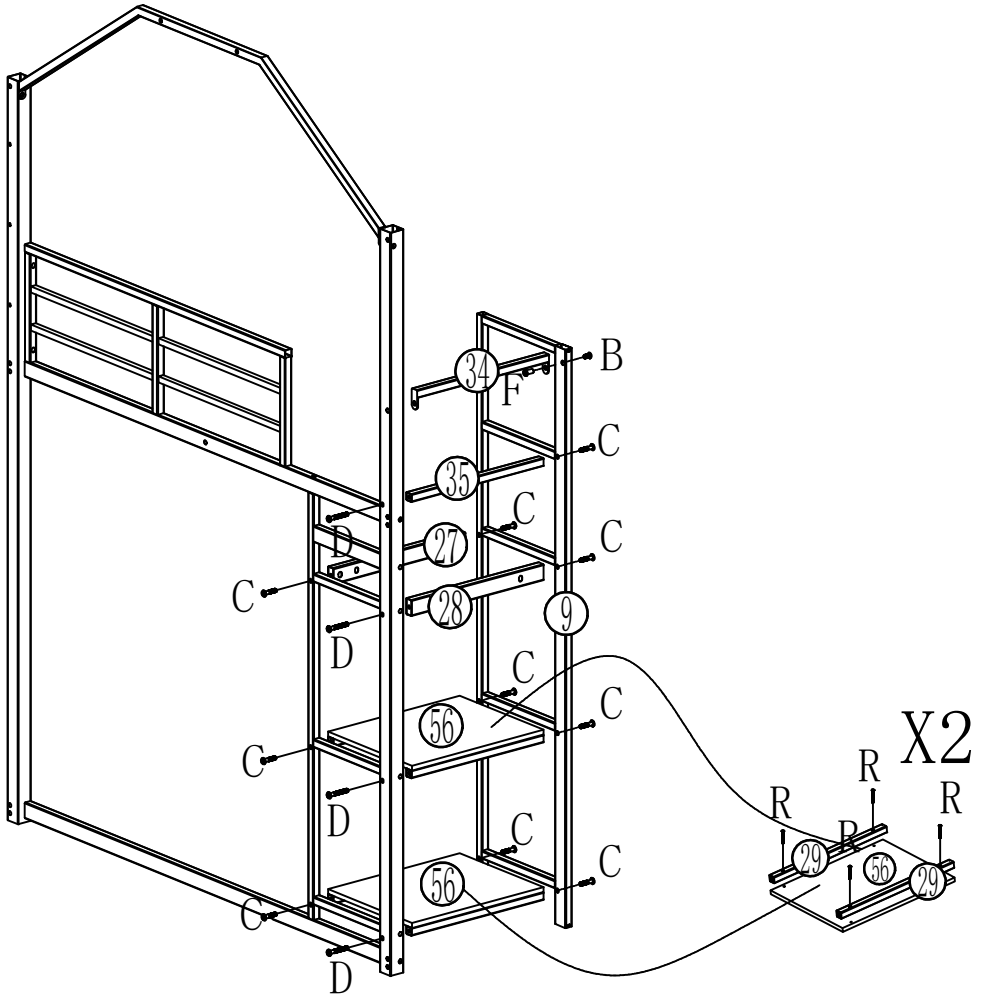

R 4*25-8PCS	C 8*35-10PCS	D 8*55-4PCS	F 8*18-1PCS	B 8*15-1PCS	L 1PCS	M 1PCS

Step 3

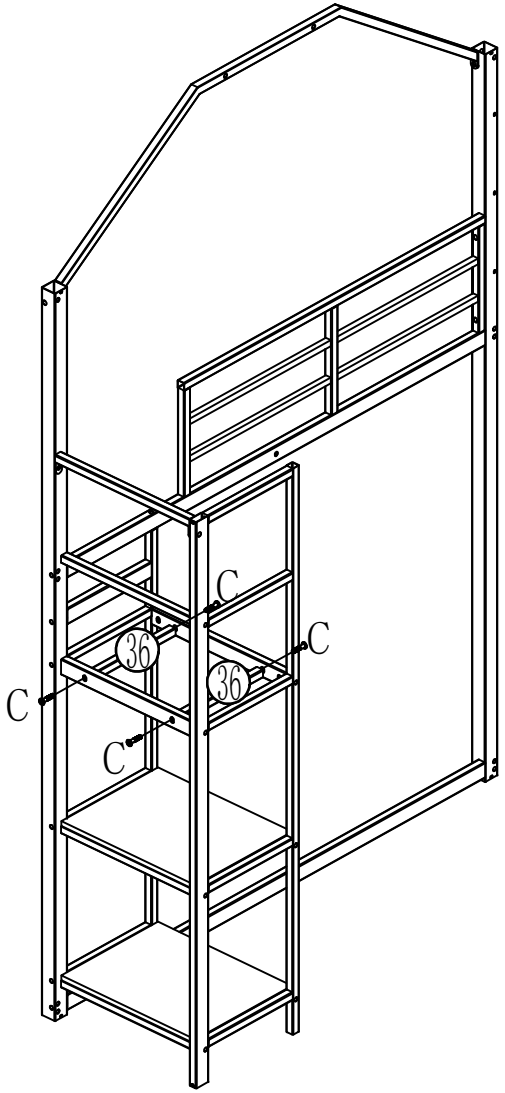

C 8*35-4PCS	L

Step 4

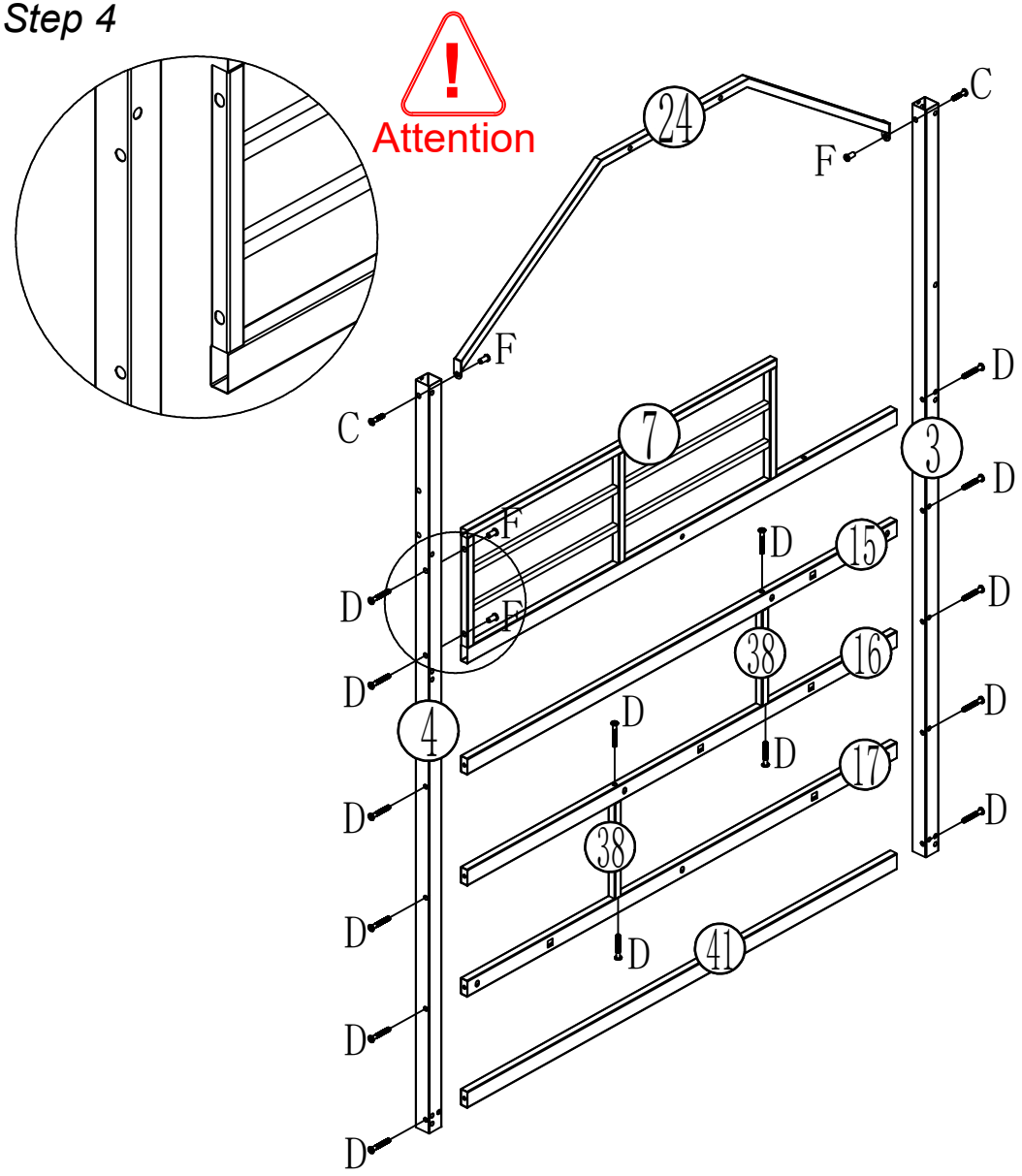

D 8*55-15PCS	C 8*35-2PCS	F 8*18-4PCS	L

Step 5

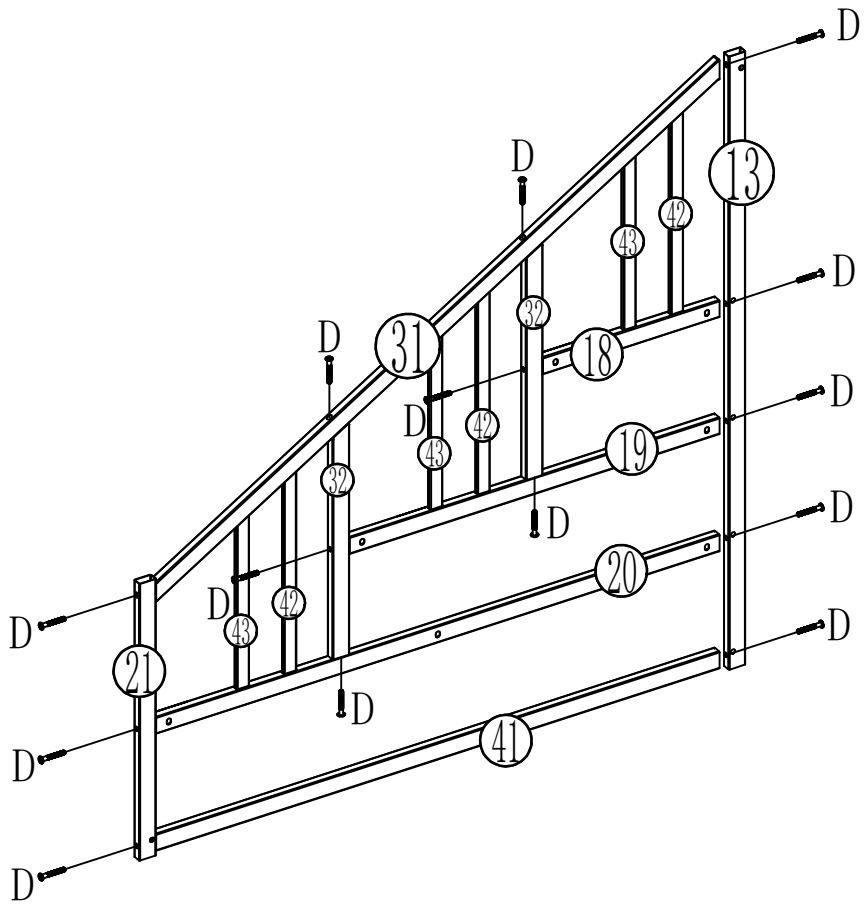

D 8*55-14PCS	L

Step 6

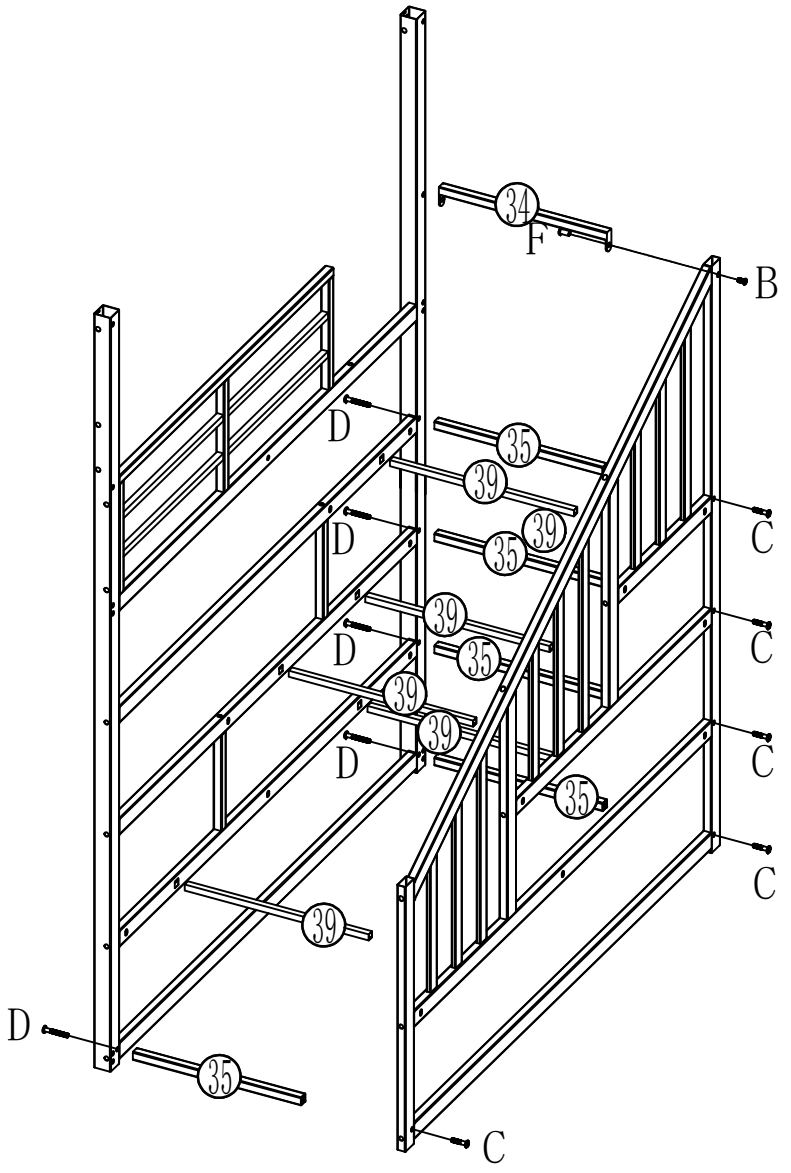

F 8*18-1PCS	D 8*55-5PCS	C 8*35-5PCS	B 8*15-1PCS	L

Step 7

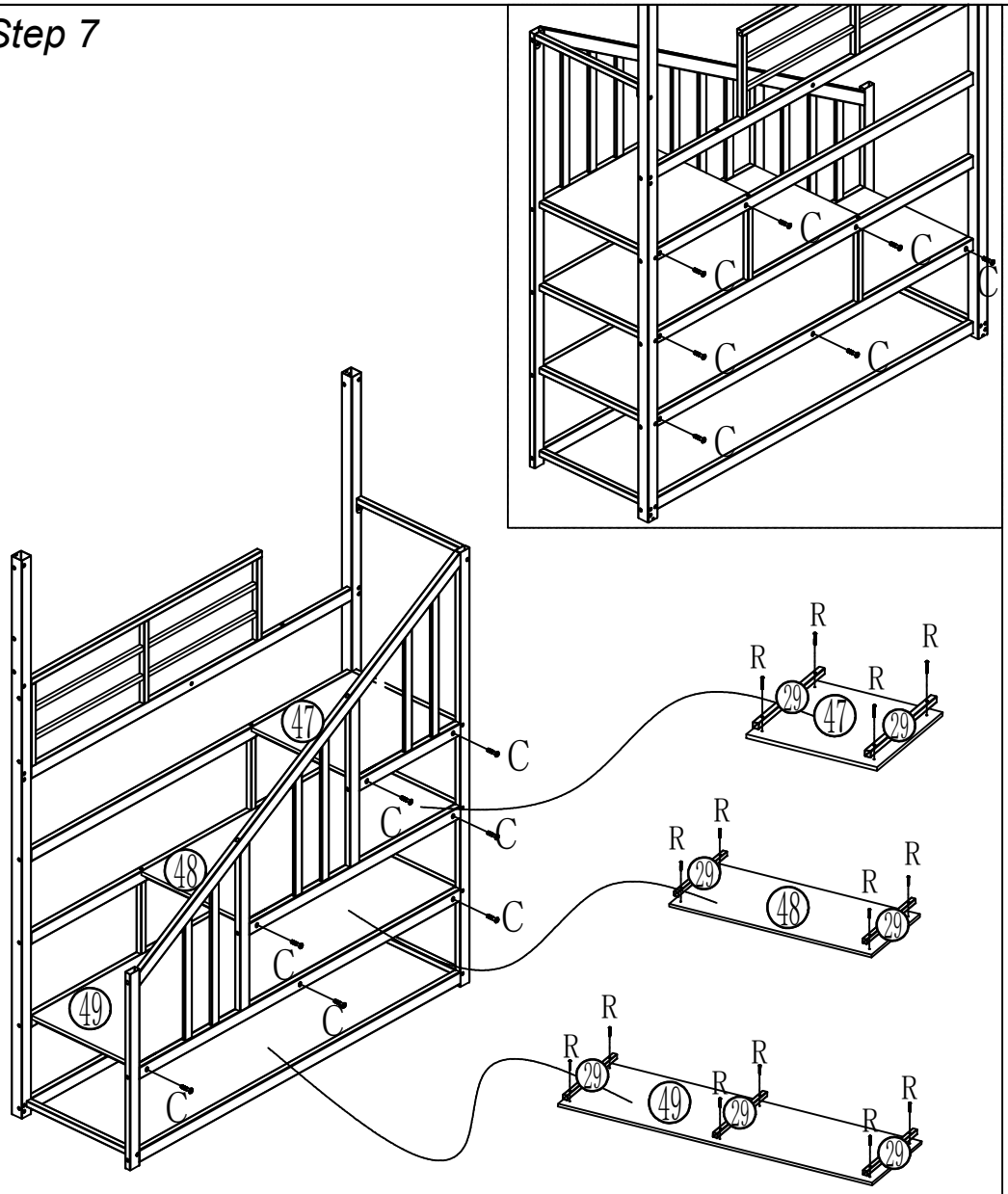

R 4*25-14PCS	C 8*35-14PCS	M 1PCS	L

Step 8

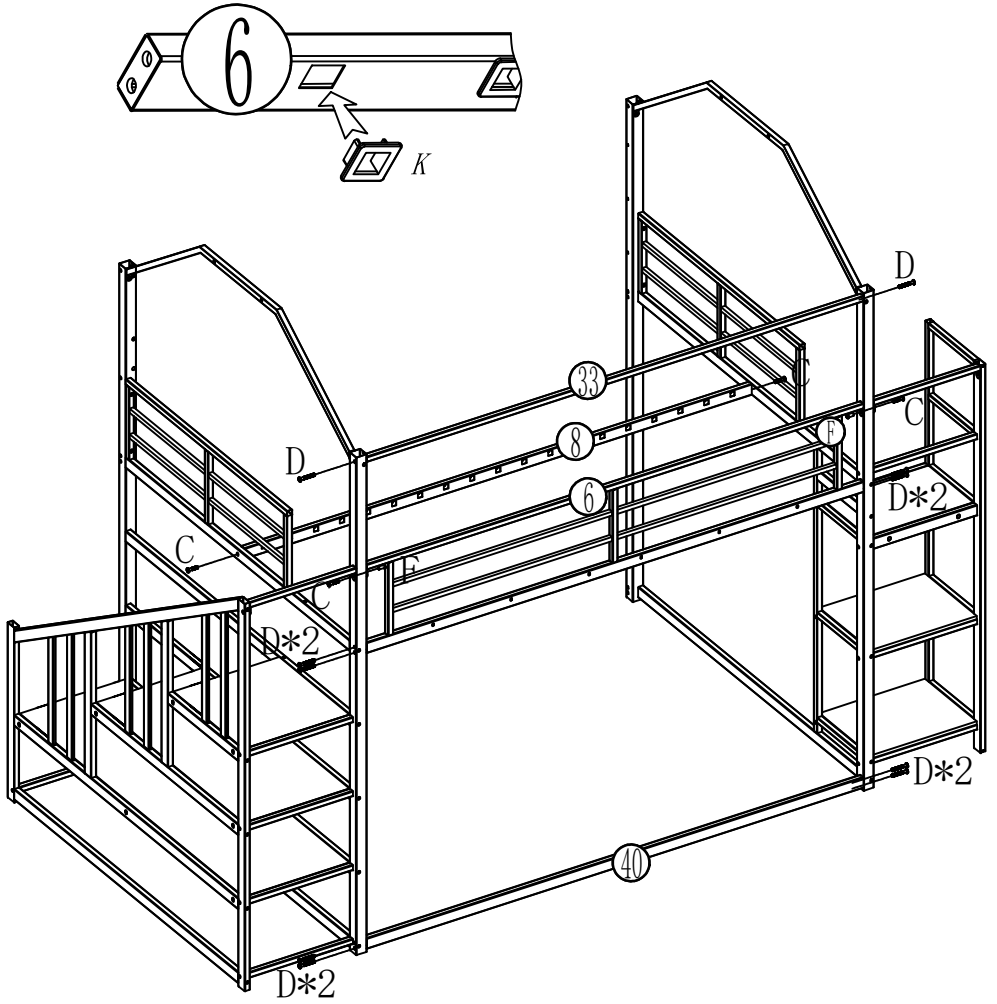

D 8*55-10PCS	C 8*35-4PCS	K 19PCS	F 8*18-2PCS	L

Step 9

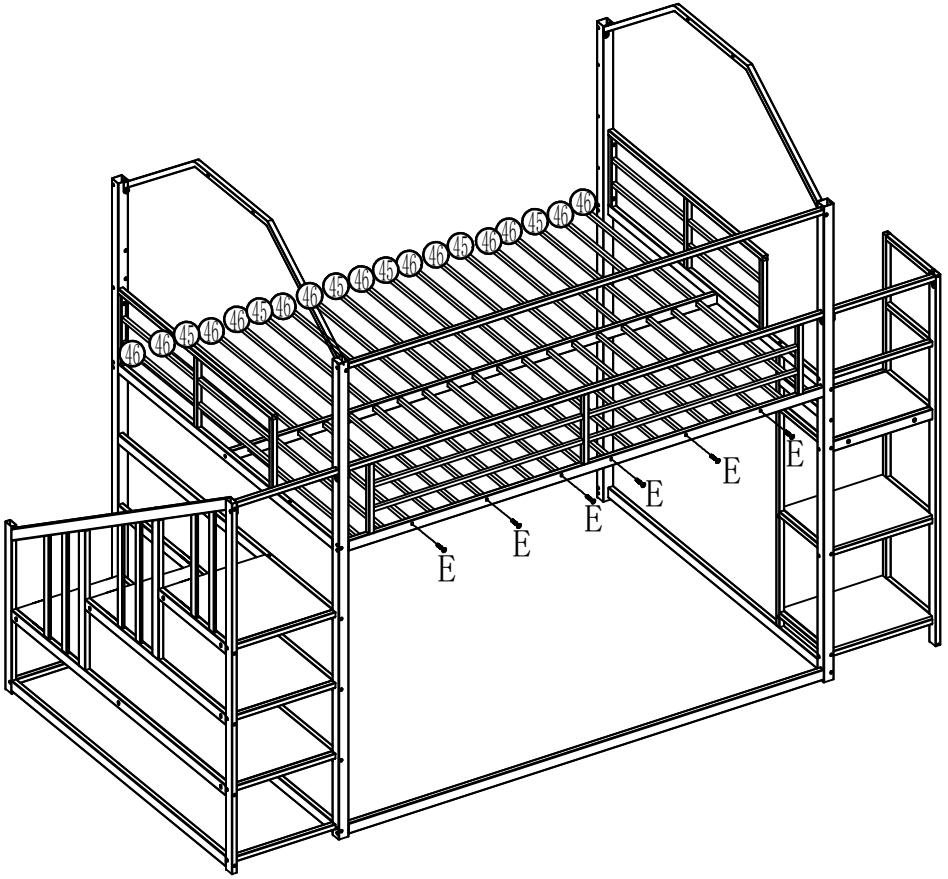

E 6*25 6PCS	L

Step 10

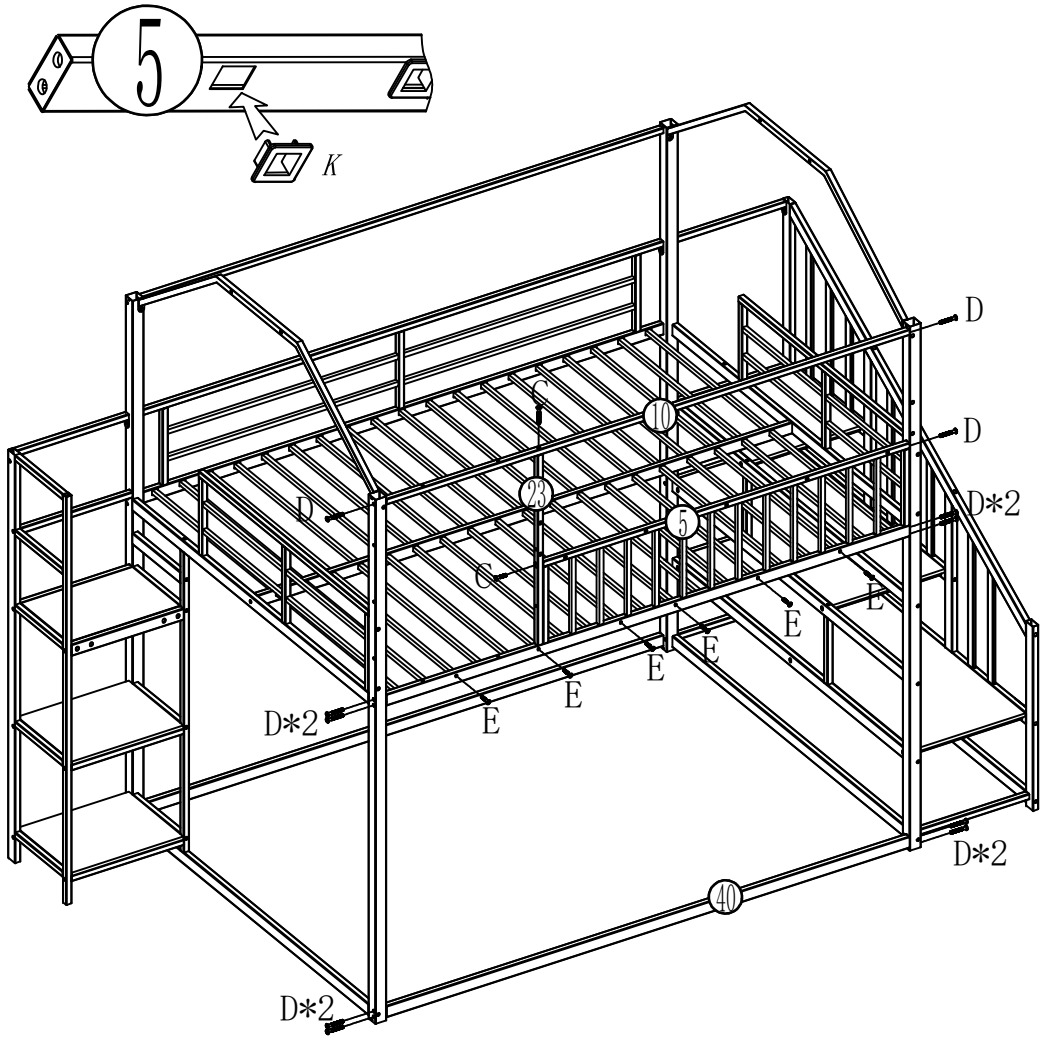

D 8*55-11PCS	C 8*35-2PCS	E 6*25 6PCS	K 19PCS	L

Step 11

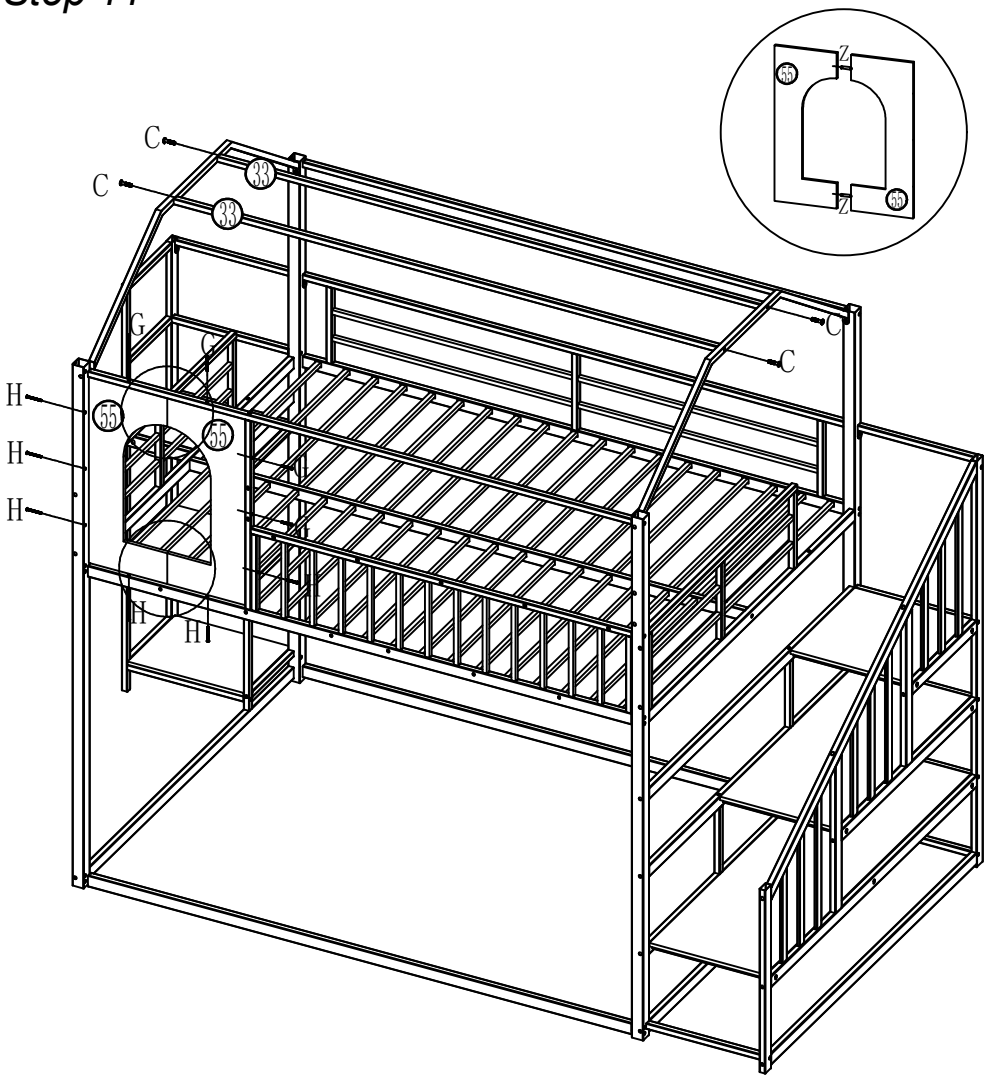

C 8*35-4PCS	H 4*50 6PCS	Z 2PCS	G 4*35 4PCS	M 1PCS

Step 12

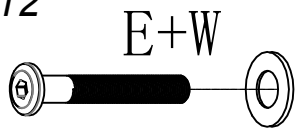

In this step, washers must be installed with the screws to prevent damage to the wooden board.

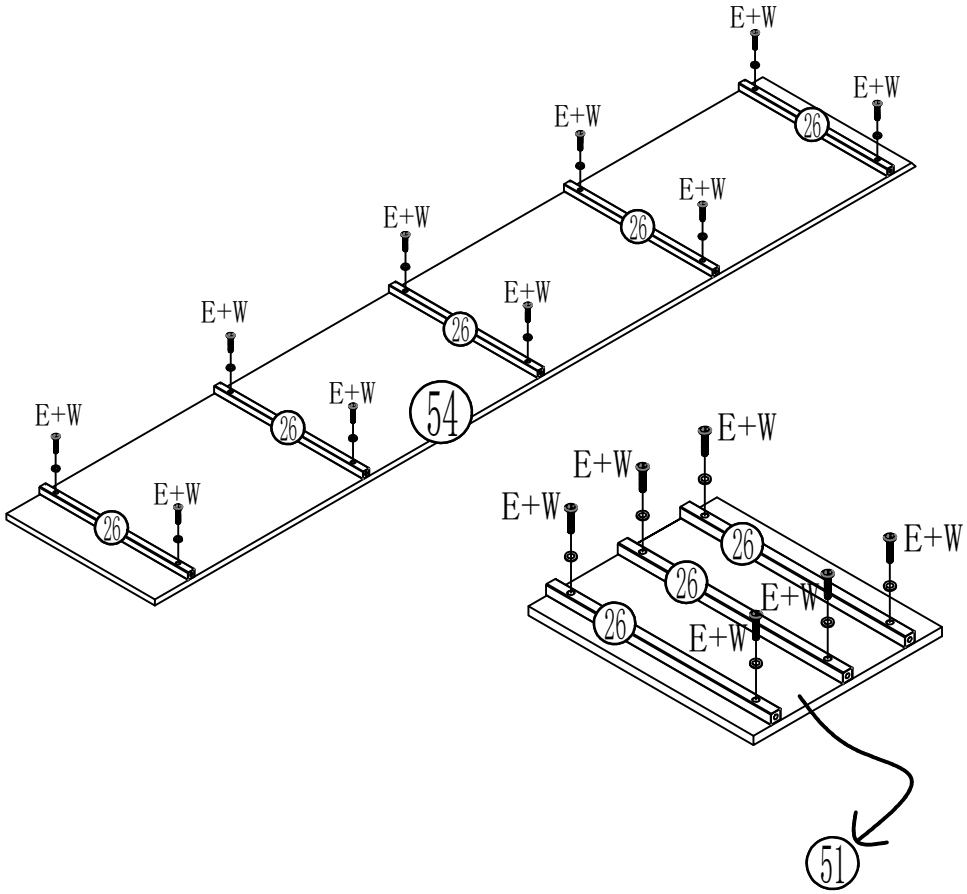

E 6*25-16PCS	W 6*3-16PCS	L

Step 13

First, fix the handrails of the slide properil.

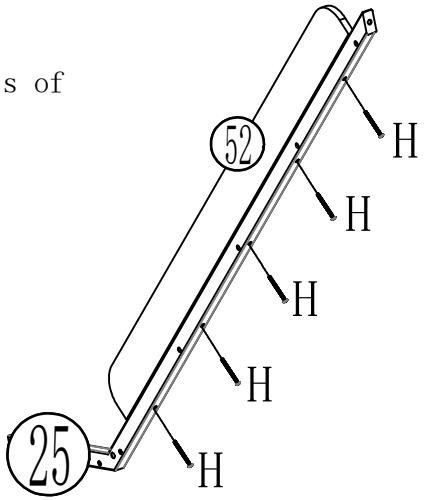

X2

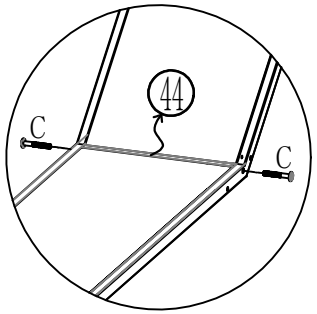

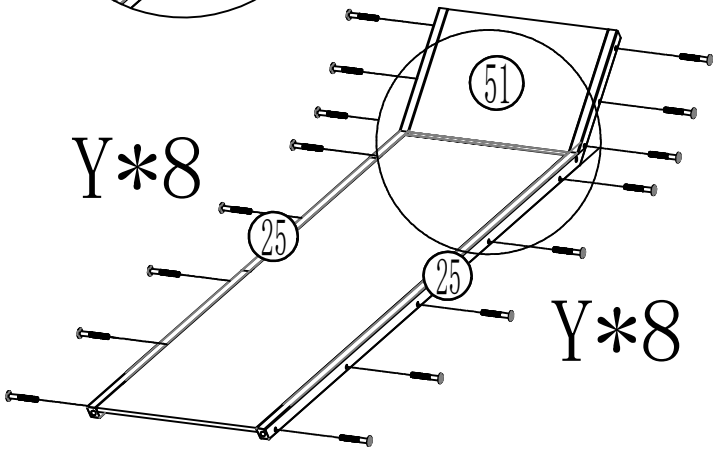

Y 6*30-16PCS	C 8*35 2PCS	H 4*55 10PCS	M	L

Step 14

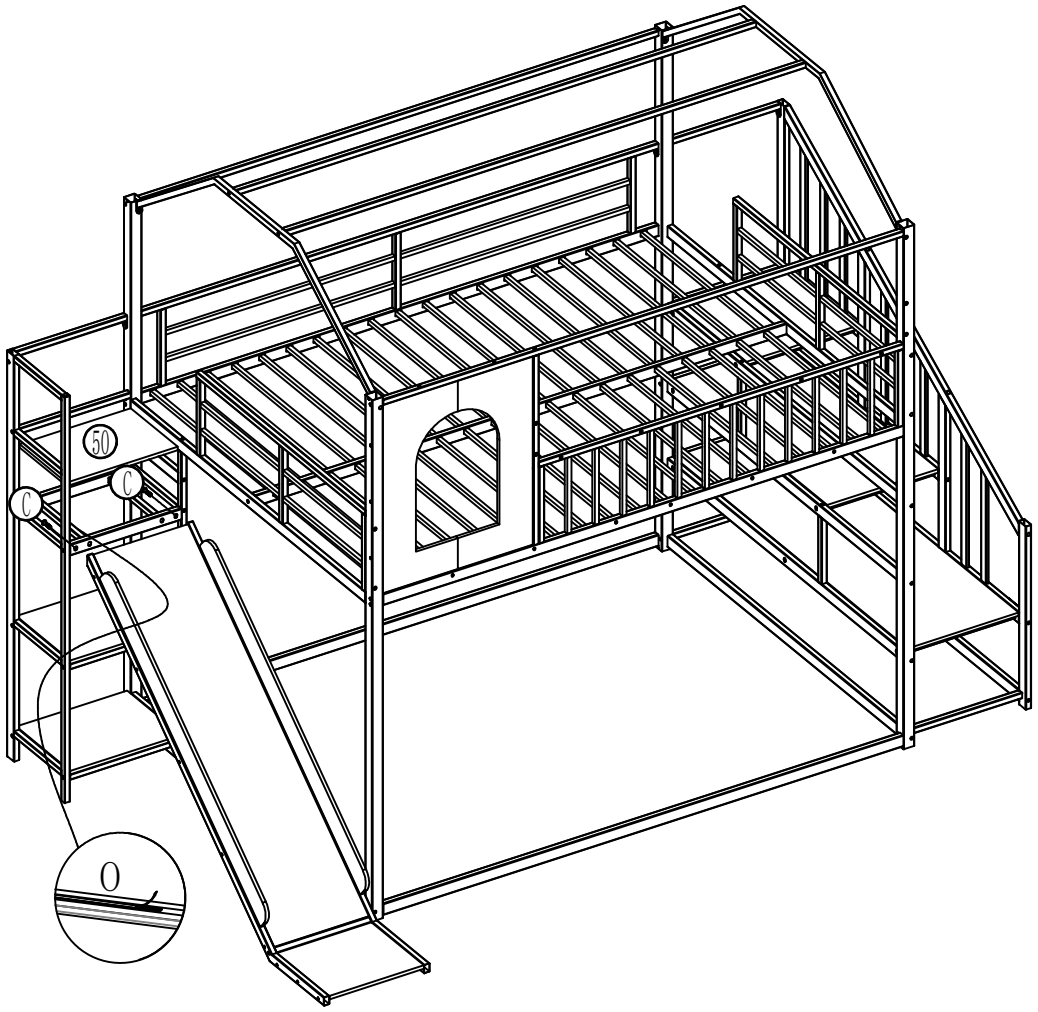

O	C 8*35 2PCS	L

Step 15

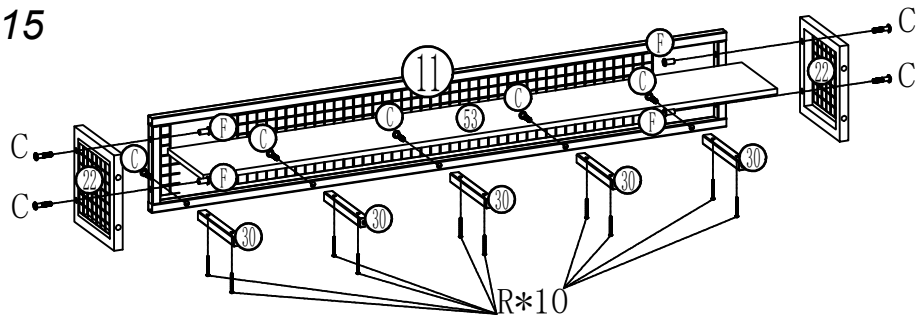

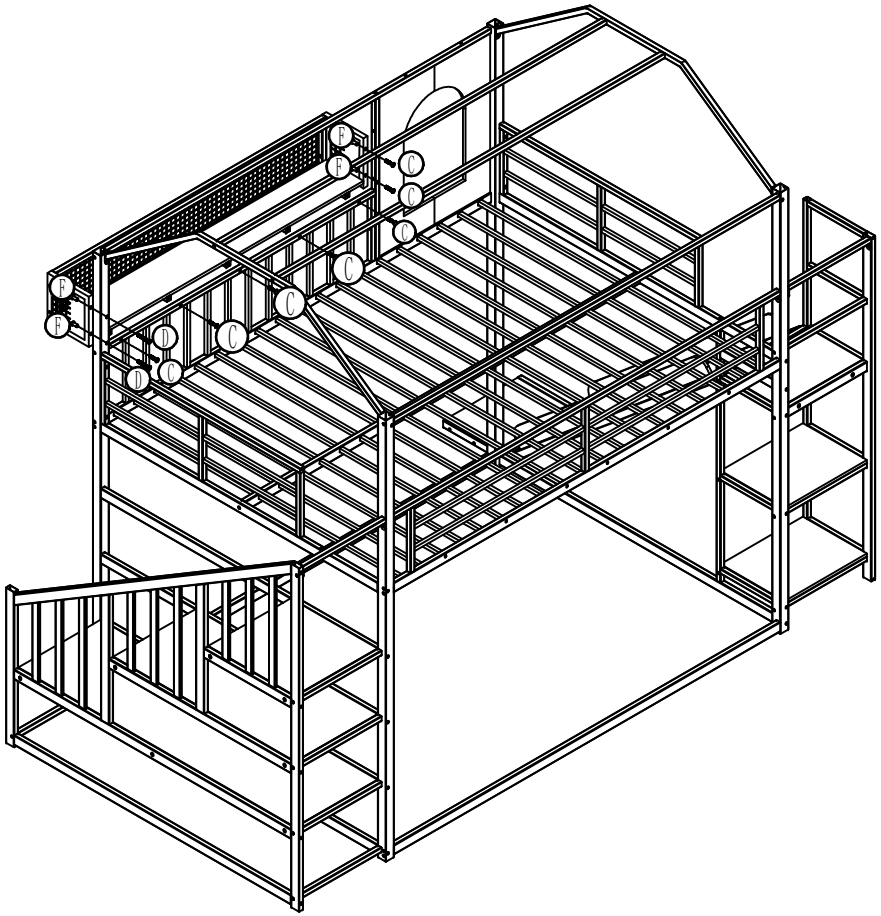

C	F	D	R	M	L
8*35-16PCS	8*18-8PCS	8*55-2PCS	4*25-10PCS		

Completed loft bed

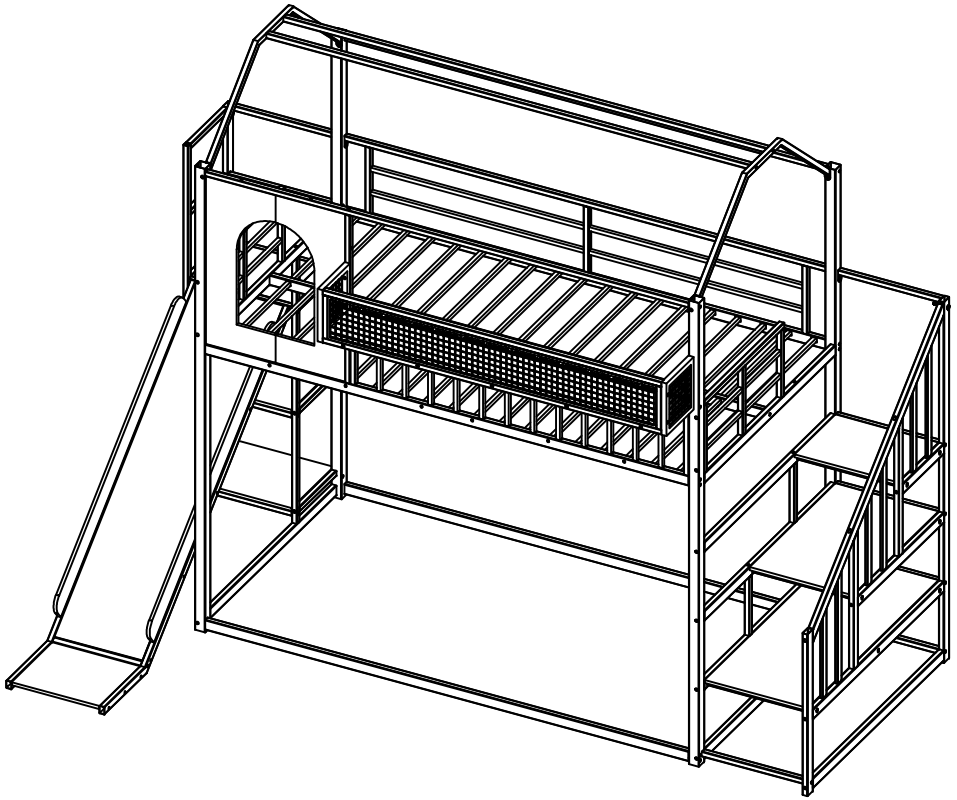

Attention

Please make sure all bolts are fastened before use, thank you.