NTQ®
Better Life Together

626 679 3588
support@trendytotesinc.com
162 Atlantic St, Pomona, CA 91768

ASSEMBLY INSTRUCTIONS
BATHROOM VANITY TOP

support@trendytotesinc.com
626 679 3588

SCAN ME
PRODUCT INSTRUCTION VIDEO

MODEL NPW4222-3K8

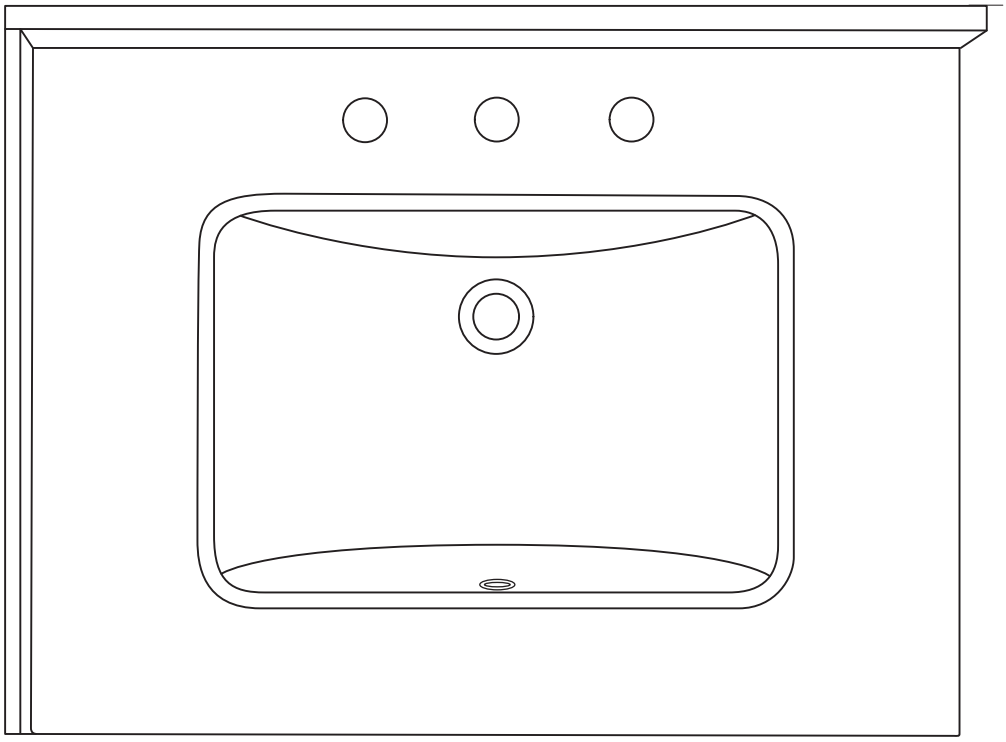

NOTE: Any size of the vanity' s intallation steps are the same.

INSTALLATION STEPS

1.Prepare the Vanity: Make sure the vanity is in place and securely attached to the wall.

2.Seal the Edges: To prevent water damage and ensure a clean finish, apply a bead of silicone caulk along the edges where the countertop meets the vanity.

(For Example)

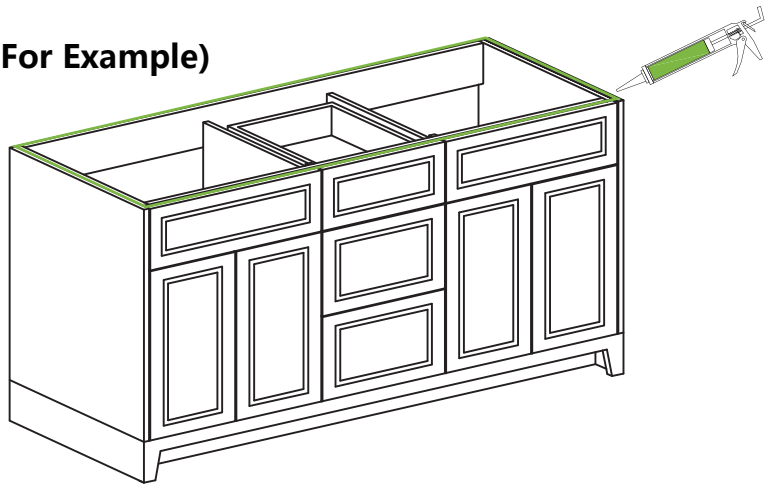

3.Attach the Countertop: Secure the solid surface countertop on the vanity.

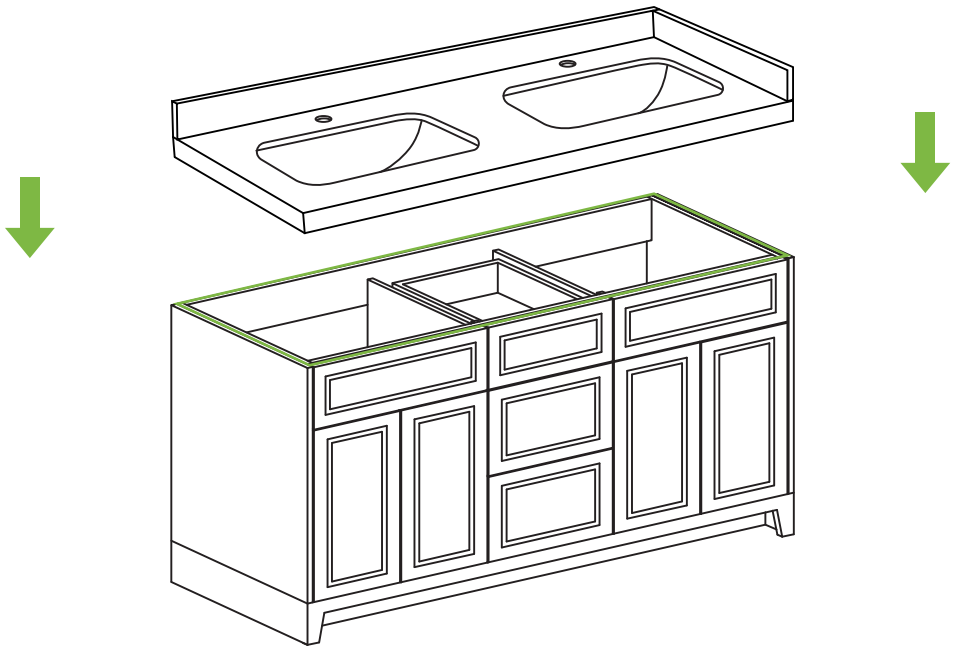



HOME SERVICES

SCAN ME

INSTALLATION VIDEO

Missing Part or Defective?

Please Contact the Customer Service Team

support@trendytotesinc.com