Assembly Instructions

- Tools Included
- Do not throw away packaging materials until assembly is complete
- Assemble this item on a soft,clean surface to protect the product
- Proper assembly requires 2 people
- Make sure all parts are included prior to assembling

PART LIST		
ITEM	DESCRIPTION	QTY
1	Table top	1 PC
2	Table leg	2 PCS
3	Table Axis	1 PC
4	Retaining piece	2 PCS

HARDWARE LIST		
ITEM	DESCRIPTION	QTY
A		13 PCS
B		13 PCS
C		13 PCS
D		1 PC

1

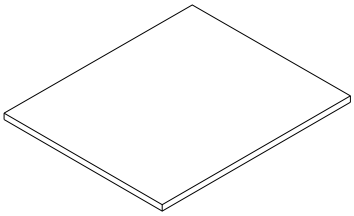

2

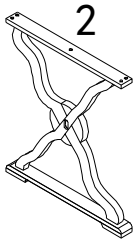

3

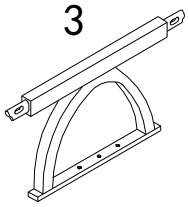

4



STEP 1

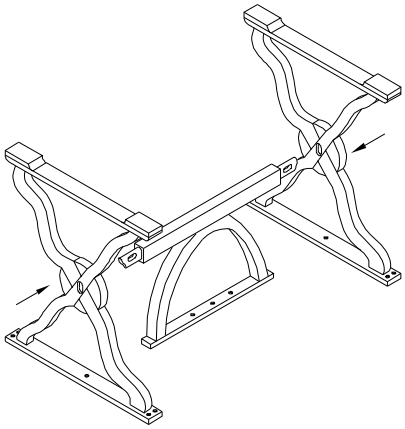

STEP 2

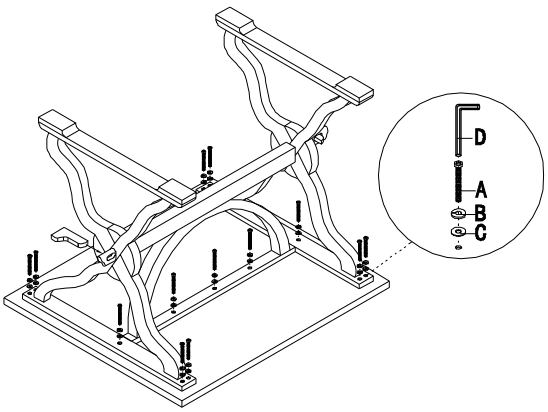

THE END

