Installation Instruction

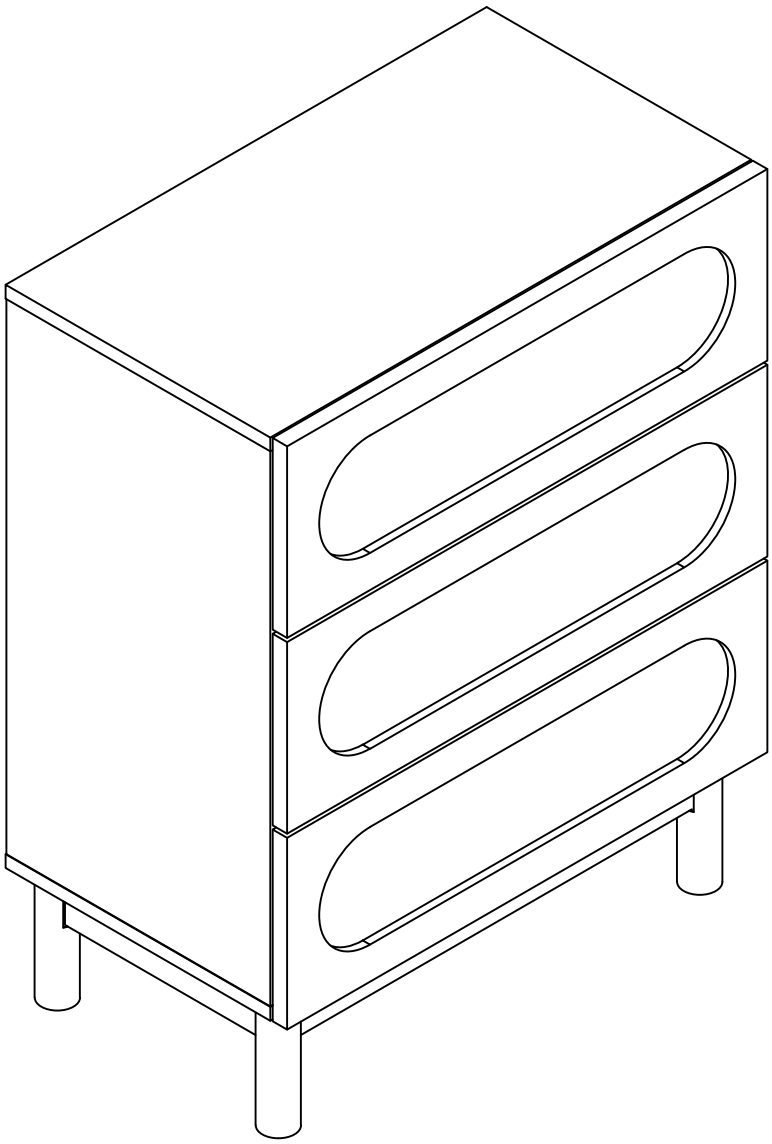

Assembling

What you need

- Use the packaging carton as a working surface to prevent product damage during assembly
- Phillips head screwdriver

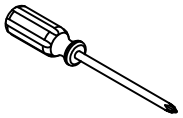

Weight Limitation

100 lbs table top | 35 lbs per

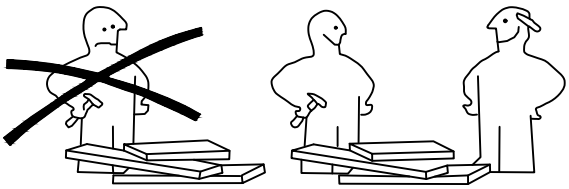

What' included

Code	Description	Qty
A	Cam Bolt M6X35MM	41
B	Cam Lock 15X10MM	41
C	Wooden Dowel M8X30MM	14
D	Screw M4X40MM	21
E	Screw M3.5X14MM	44
F	Connect Angle irons	4
G	Metal connector	2
H	Screw M3.0X14MM	24
I	Door Rebound Device	3
J	The back button	12
K	Anchor	2
L	MATS	4
M	Door Rebound Device Holder	3
N	Self-adhesive hole sticker	41
O	The screw M6X35MM	8
P	Screw Ø16*2MM	8
Q	Wrench M4X90MM	1
CL	Left mother extended orbit	3
CR	Right mother extended orbit	3
DL	Left public extension track	3
DR	Right public extends track	3

The Hardwares

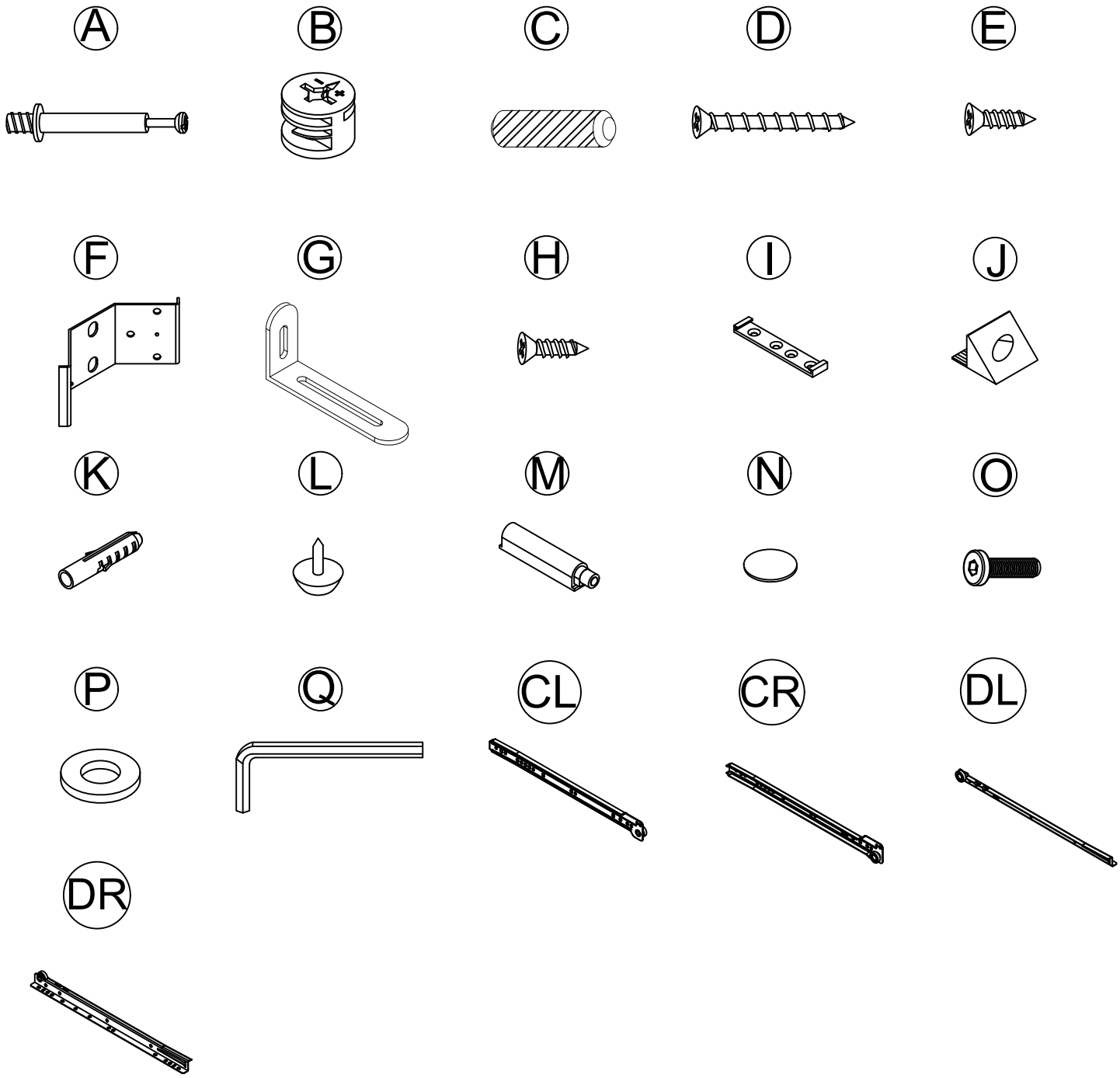

IMPORTANT:
1.Do not tighten bolts / screws completely until all bolts / screws are lined up and inserted into holes.
2.Do not over tighten screws and bolts to avoid stripping
3.You can use a screwdriver. Power tools can also be used. (Be careful with power tools)

Included Accessories

Code	Description	Qty
1	Cabinet Top	1
2	Bottom Panel	1
3	Left Side Panel	1
4	Right Side Panel	1
5	On the rear panell	2
6	Drawer left panel	3
7	Drawer right side panel	3
8	The drawer bottom	3
9	After the drawer board	3
10	Solid wood feet	4
11	Drawer panel	3
12	At the bottom of the drawer	3
13	Drawer baffle	2
14	After the gusset plates	1
15	Foot front and rear connecting plates	2
16	Foot left and right connecting plate	2

The Accessoriess

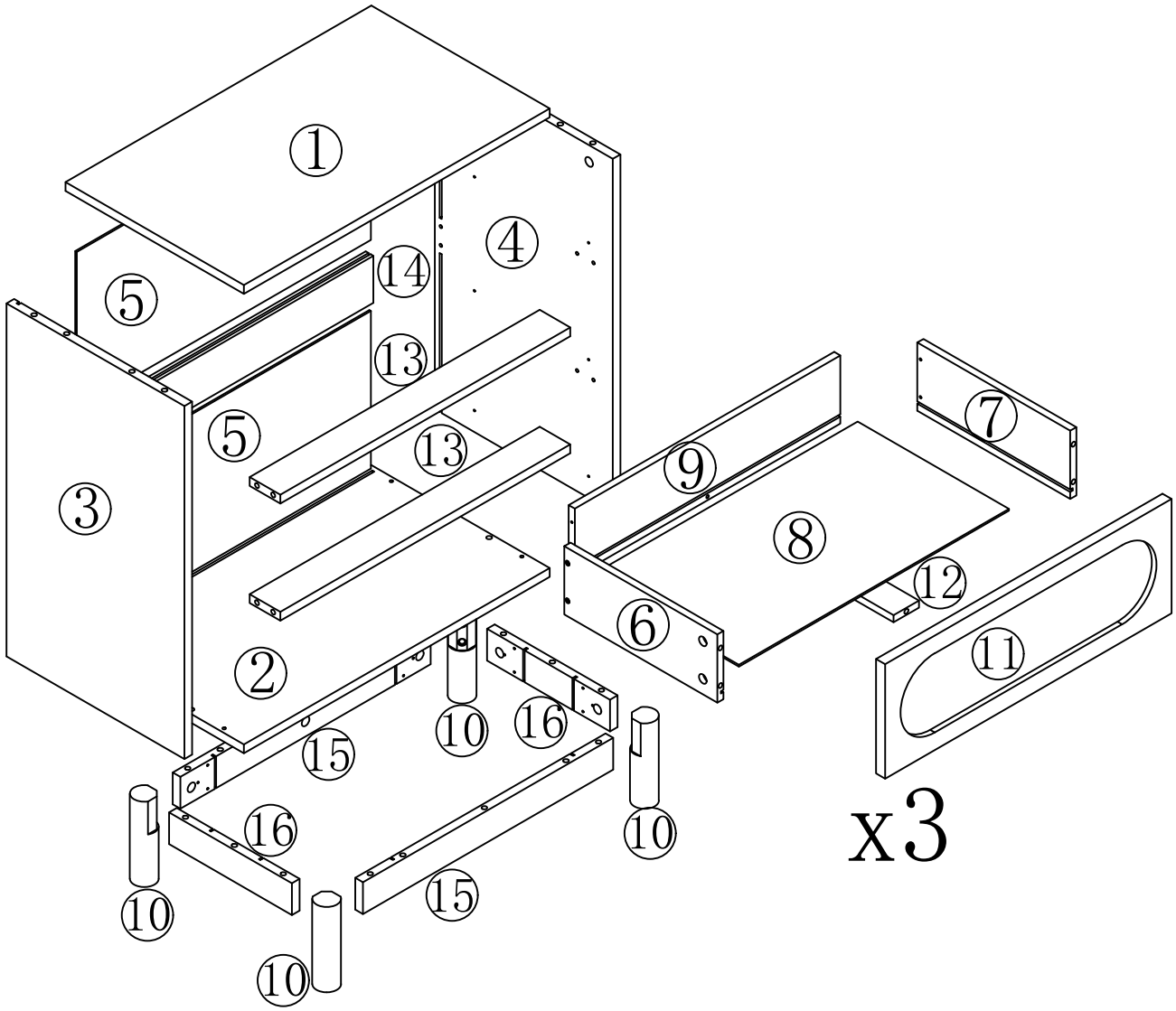

Step 1

CL	×3

CR	×3

H	×12

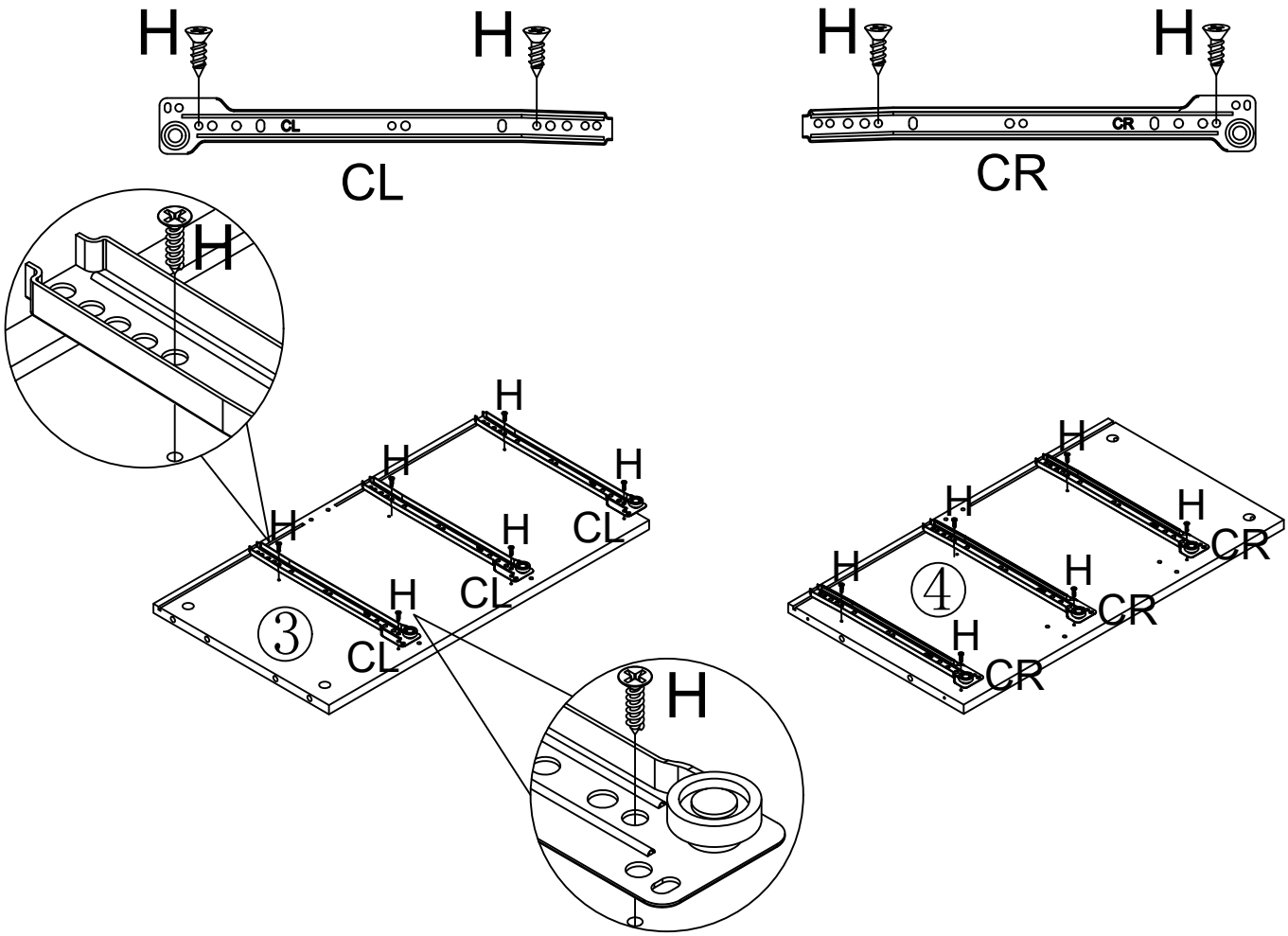

Step 2

A	×12

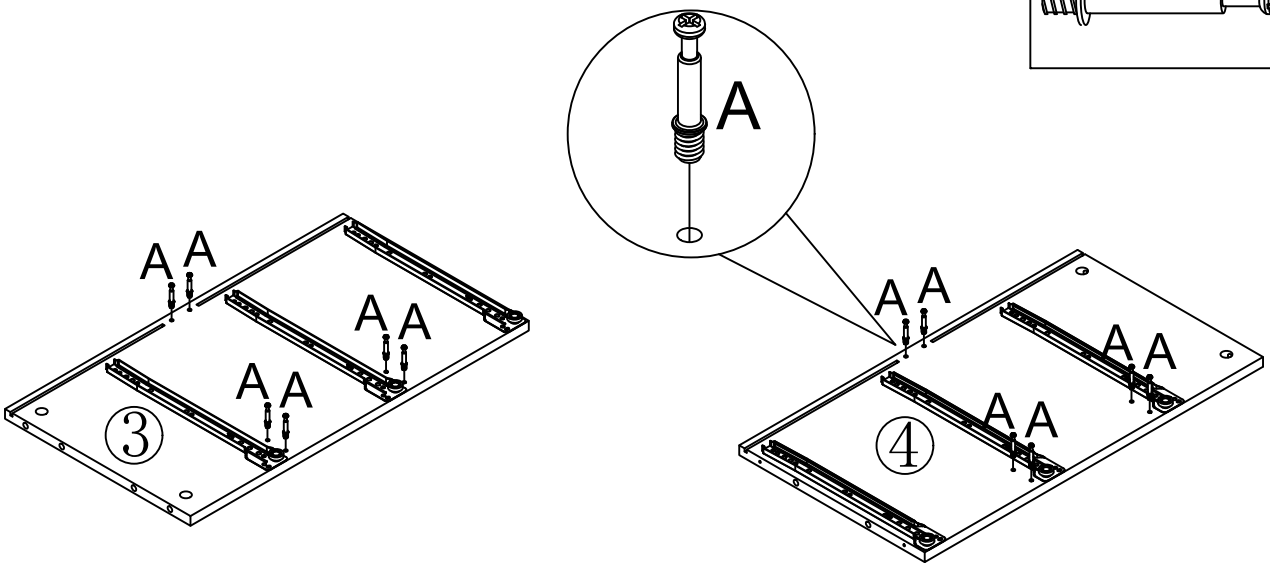

Step 3

E	×4

I	×2
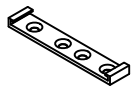	

M	×2
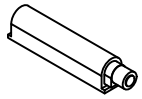	

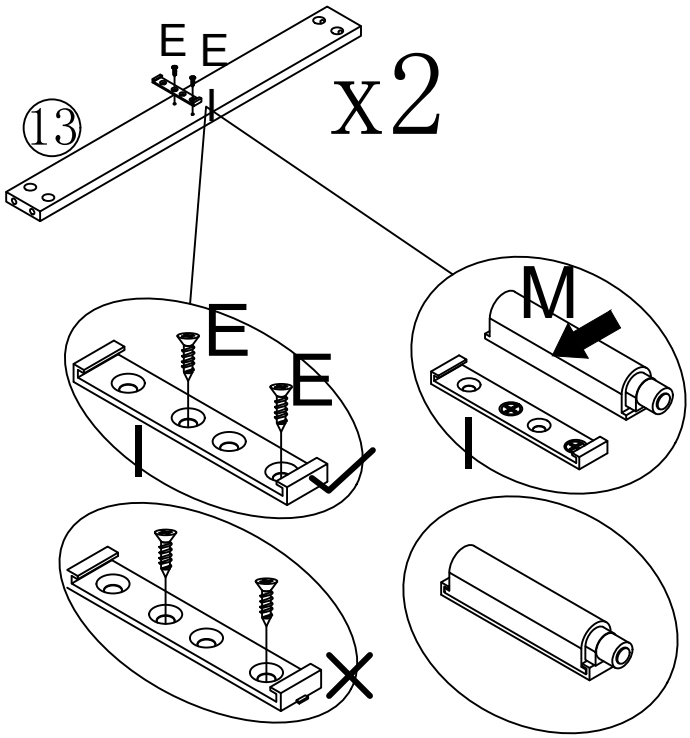

Step 4

B	×6

N	×6

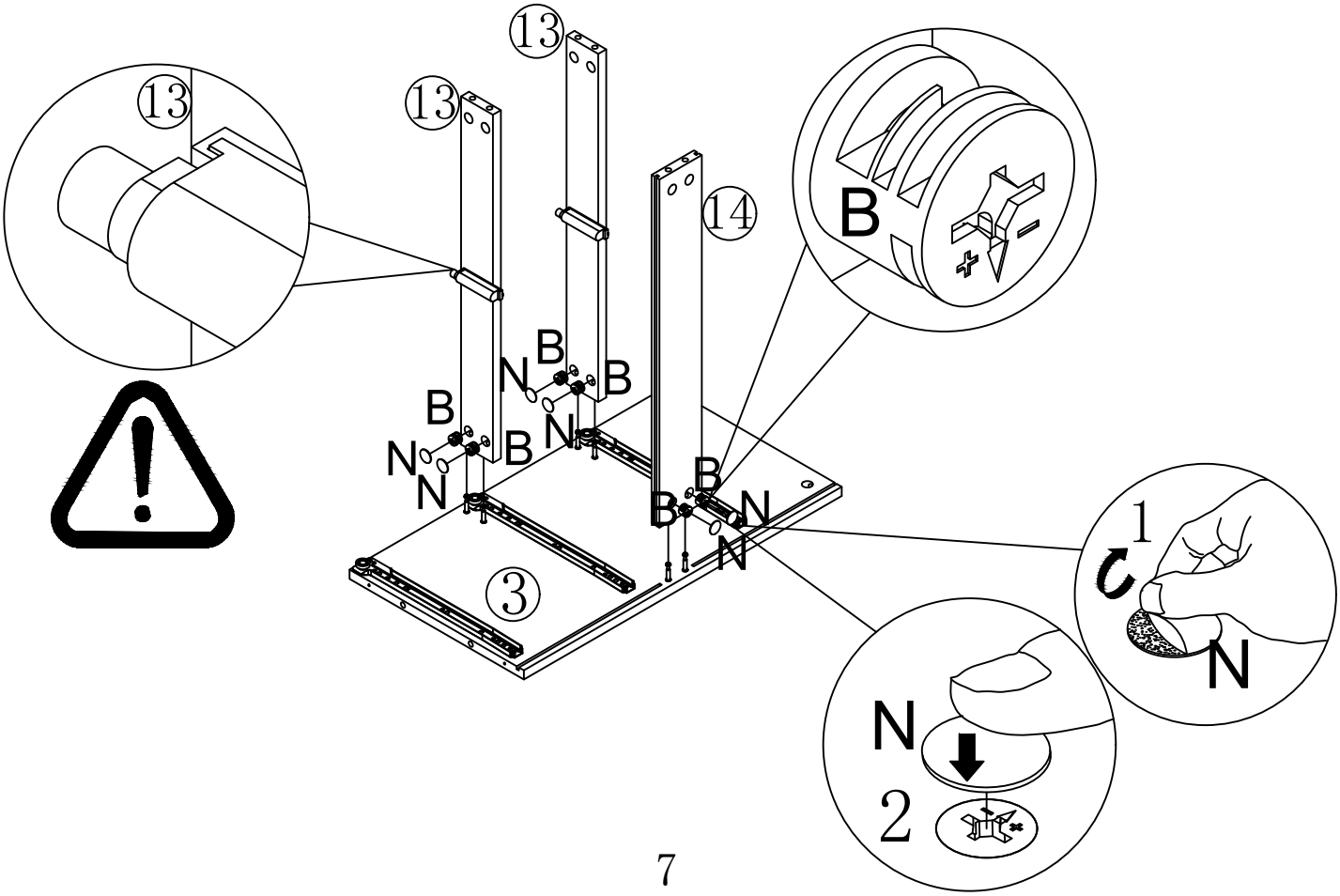

Step 5

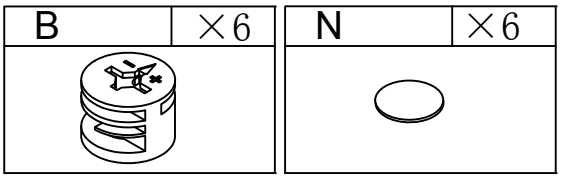

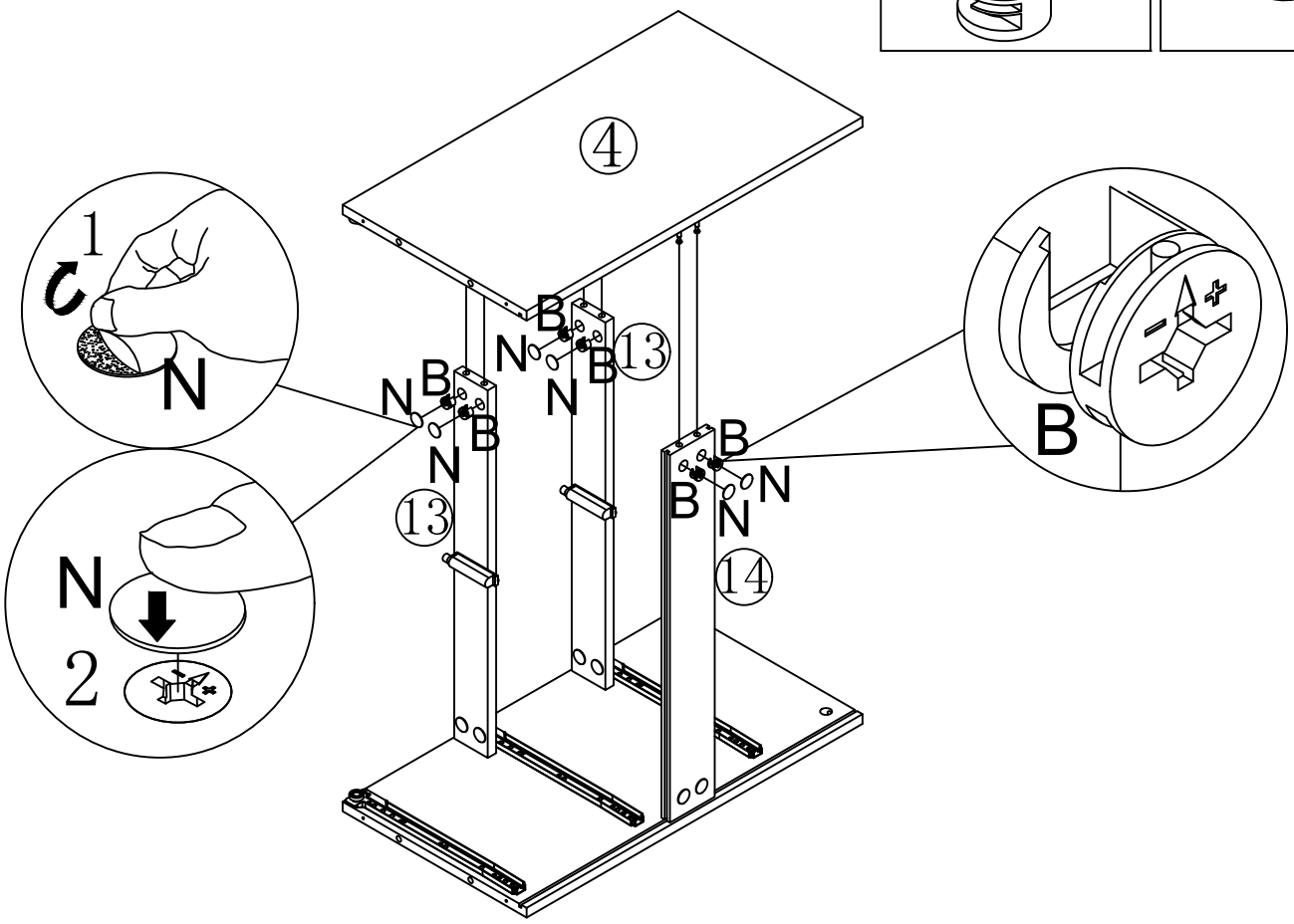

Step 6

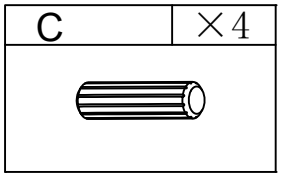

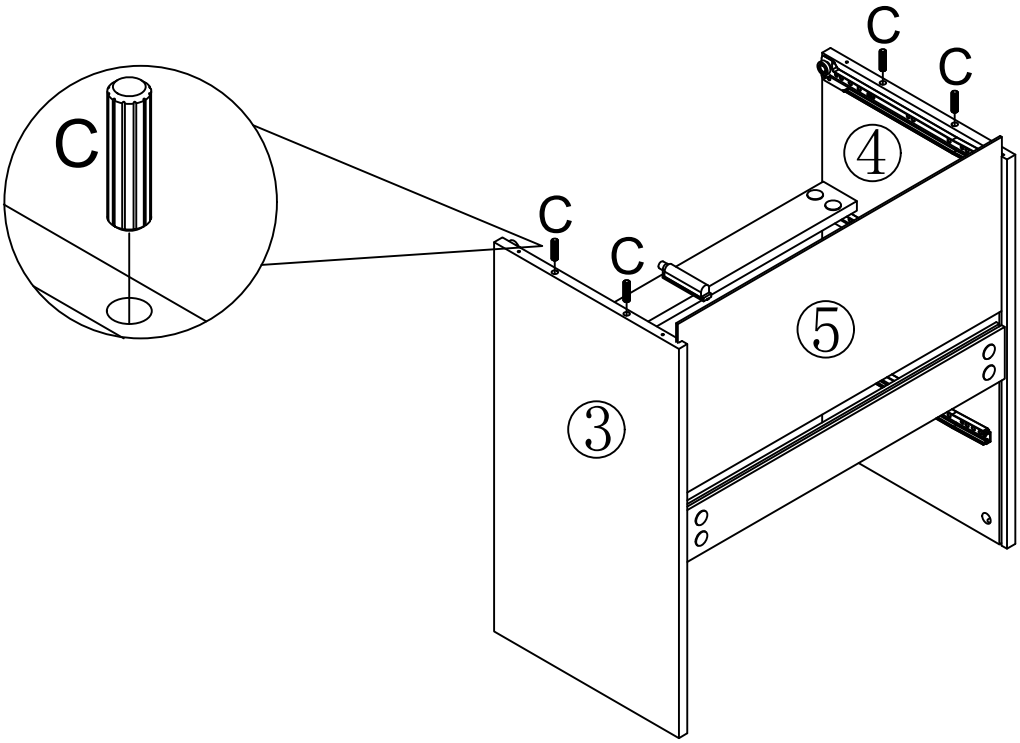

Step 7

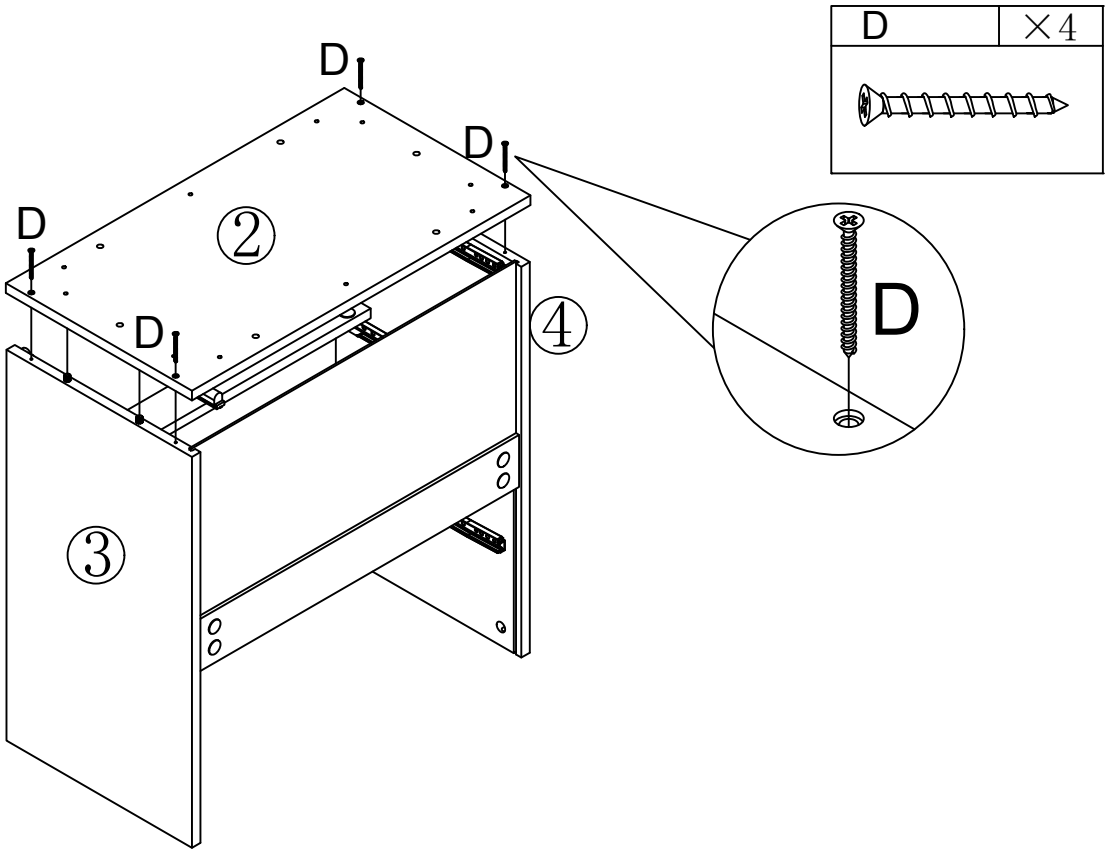

Step 8

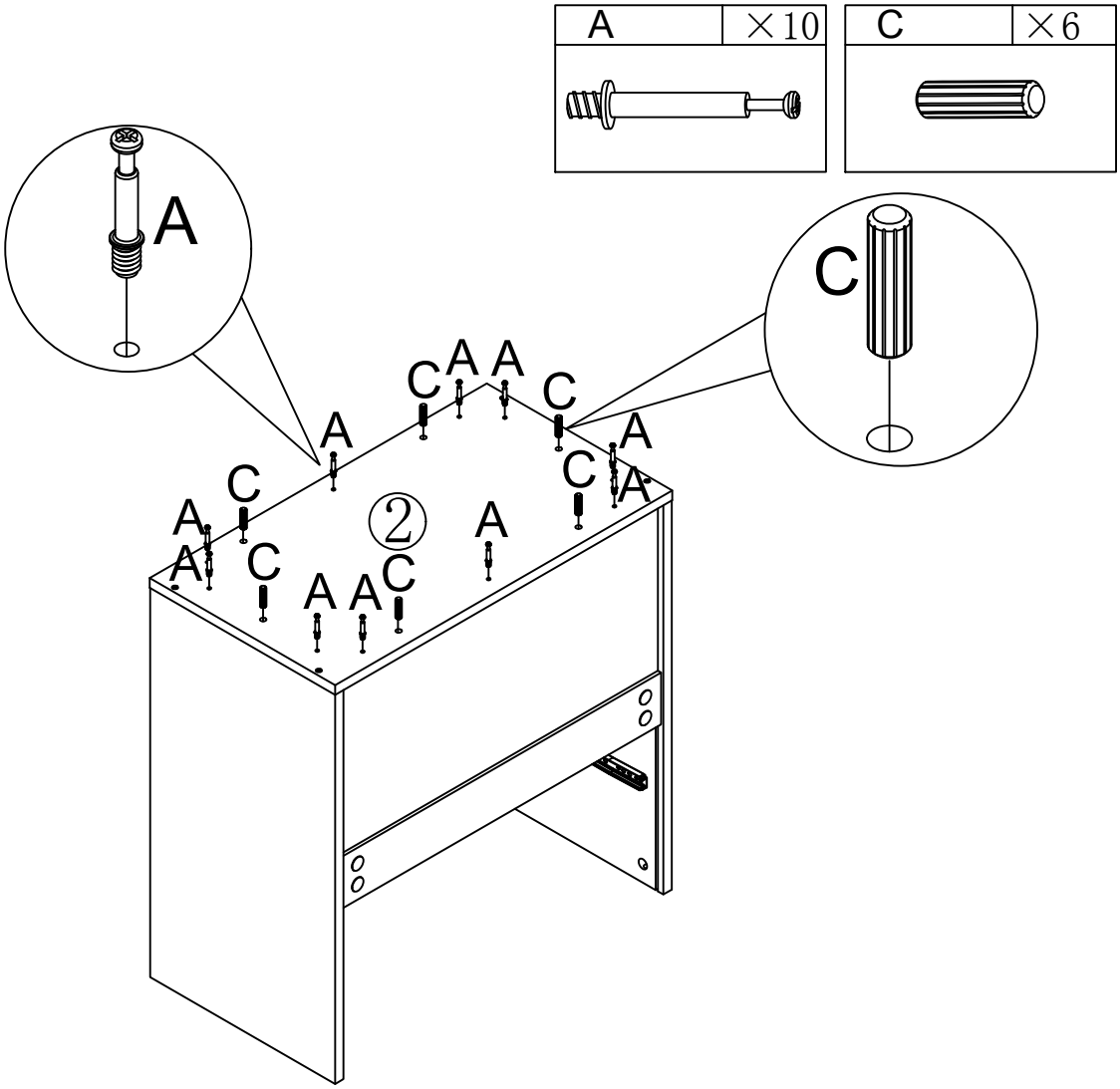

Step 9

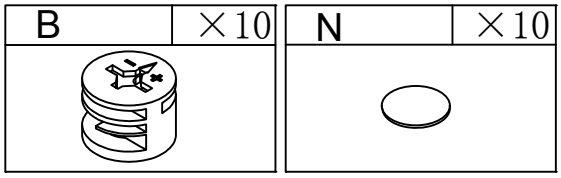

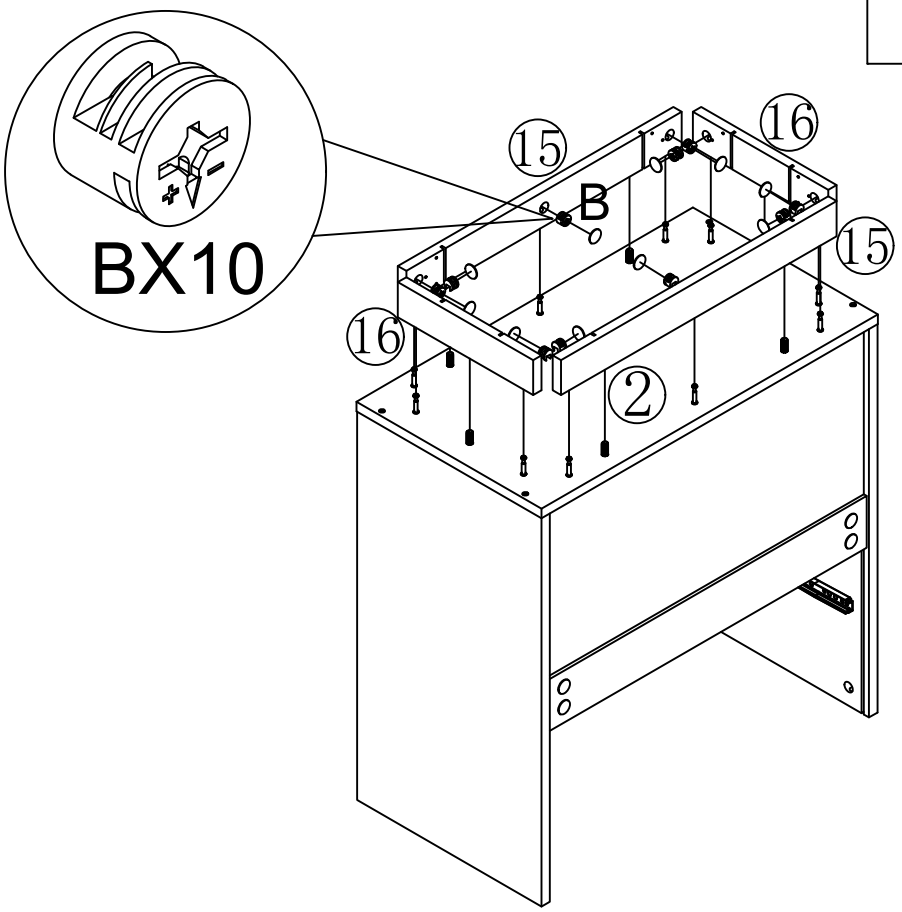

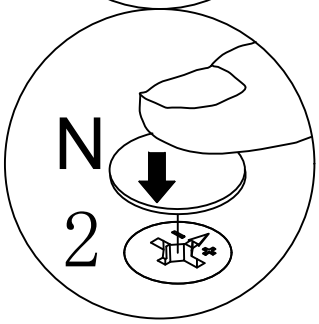

Step 10

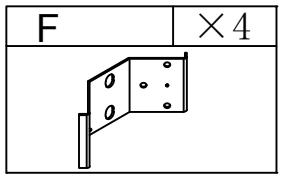

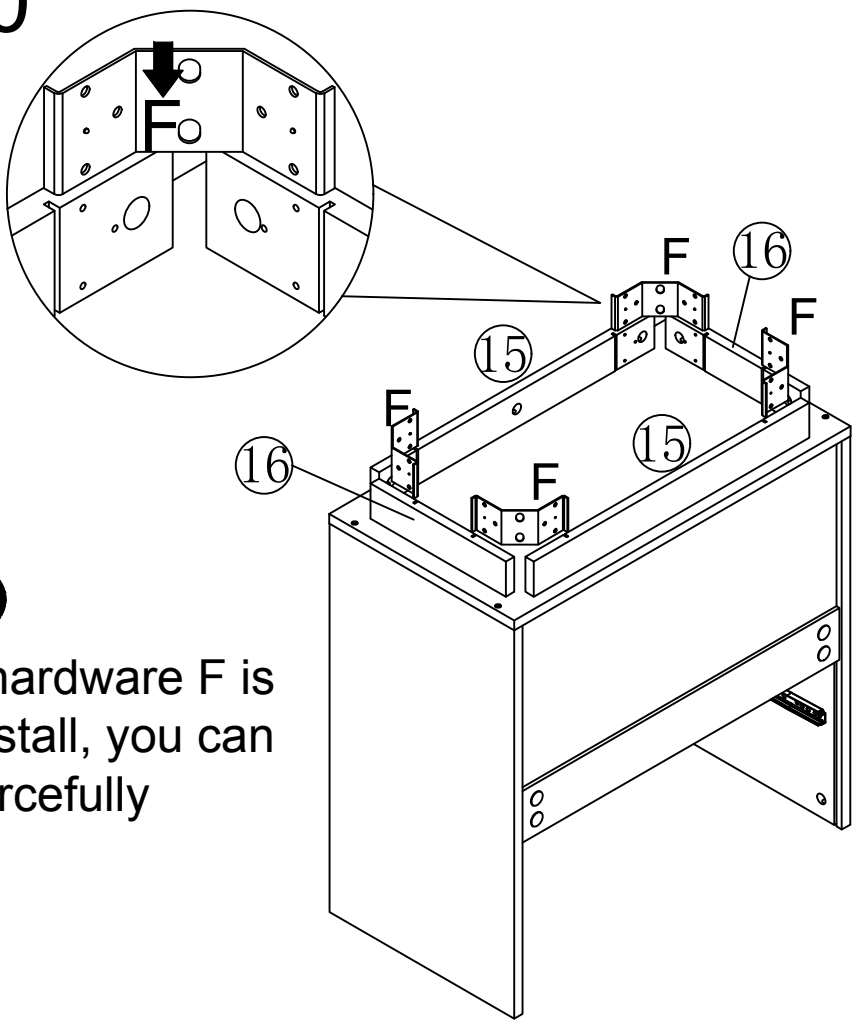

Note that if hardware F is difficult to install, you can press it in forcefully

Step 11

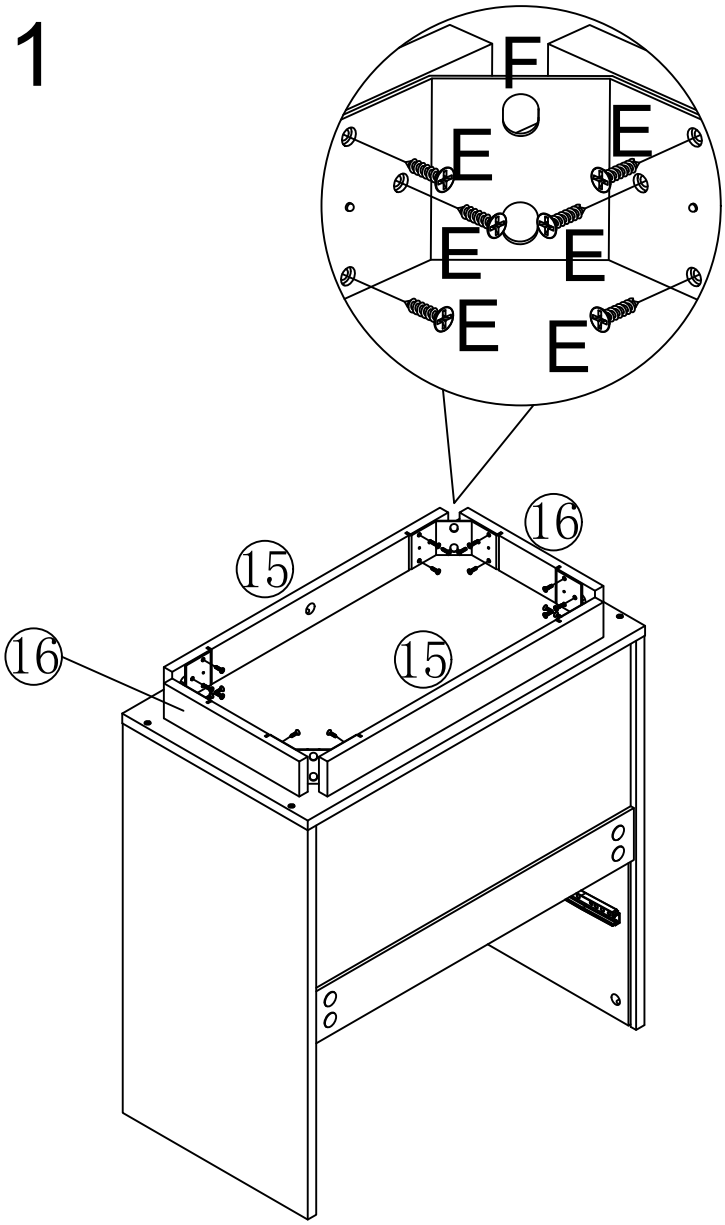

E	×24

Step 12

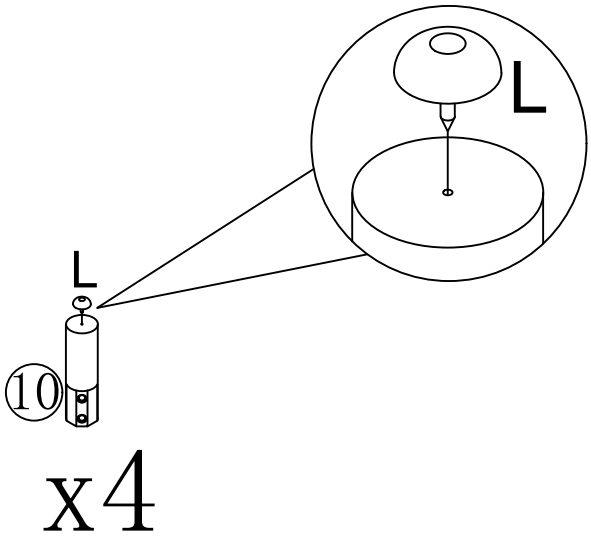

L	×4

Step 13

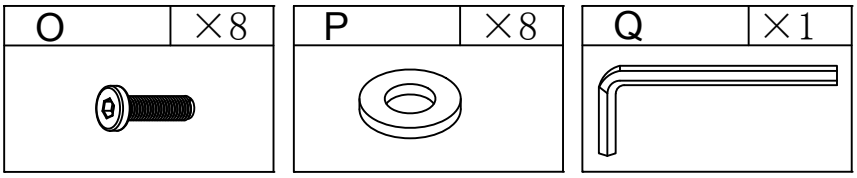

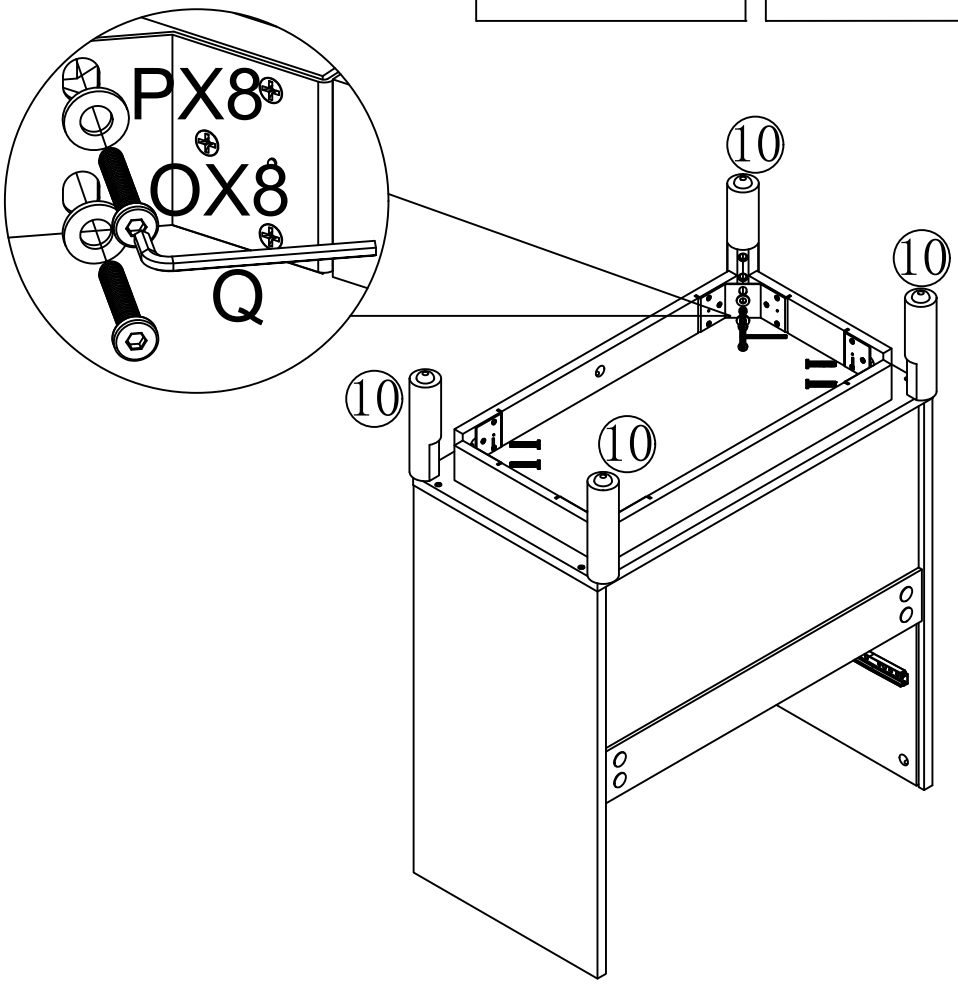

Step 14

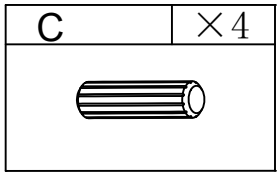

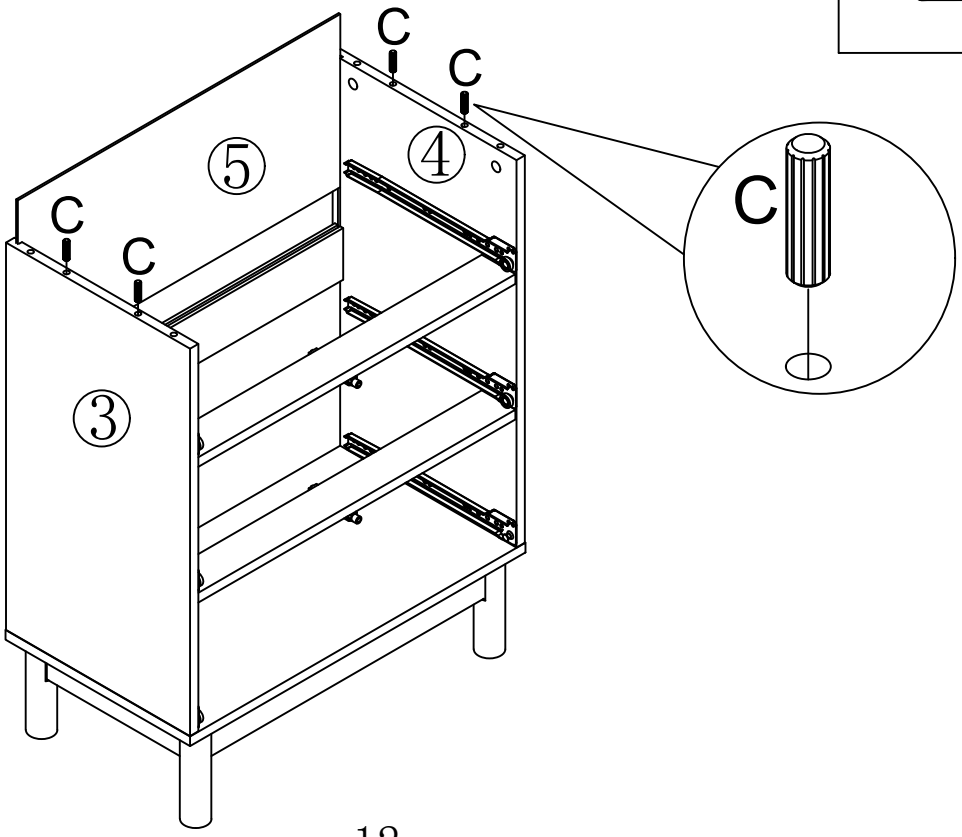

Step 15

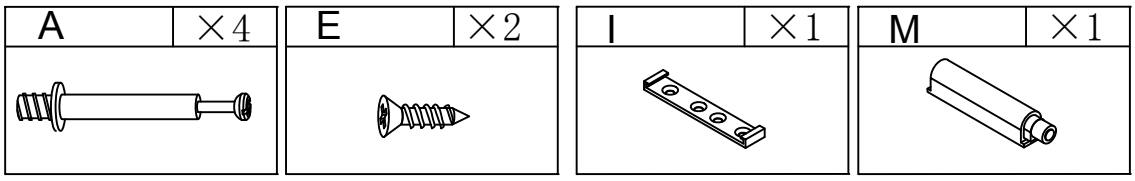

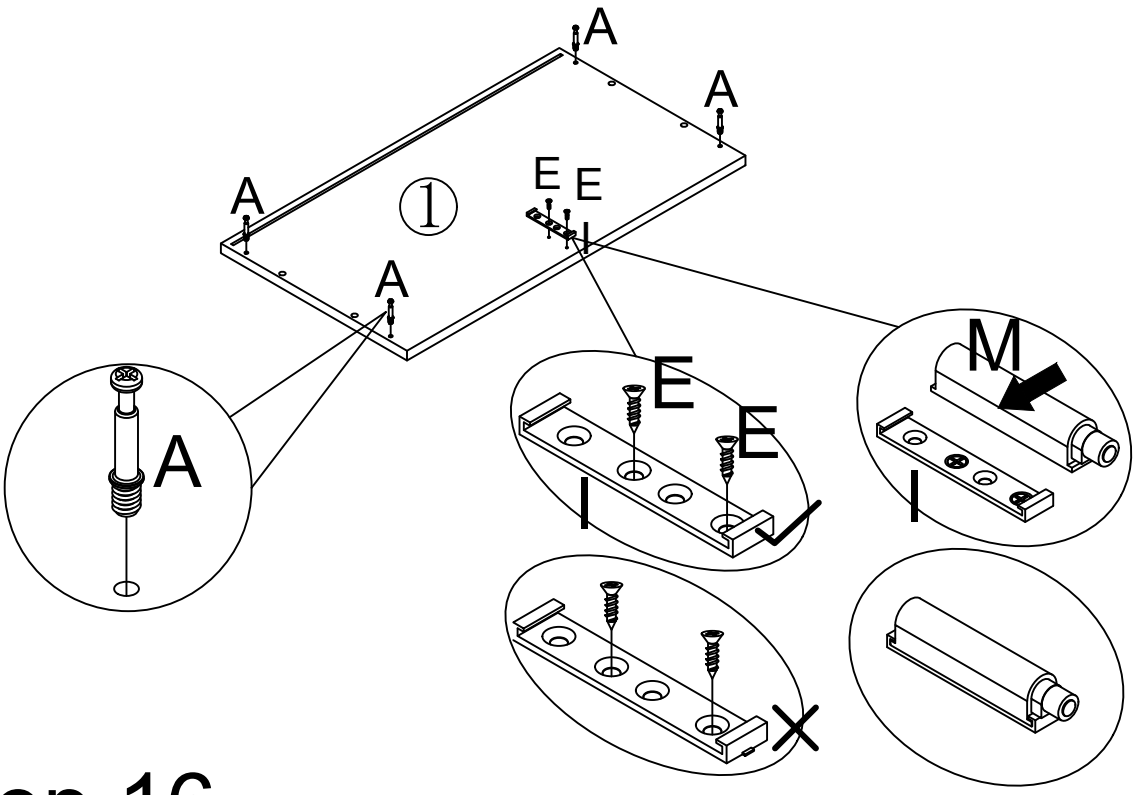

Step 16

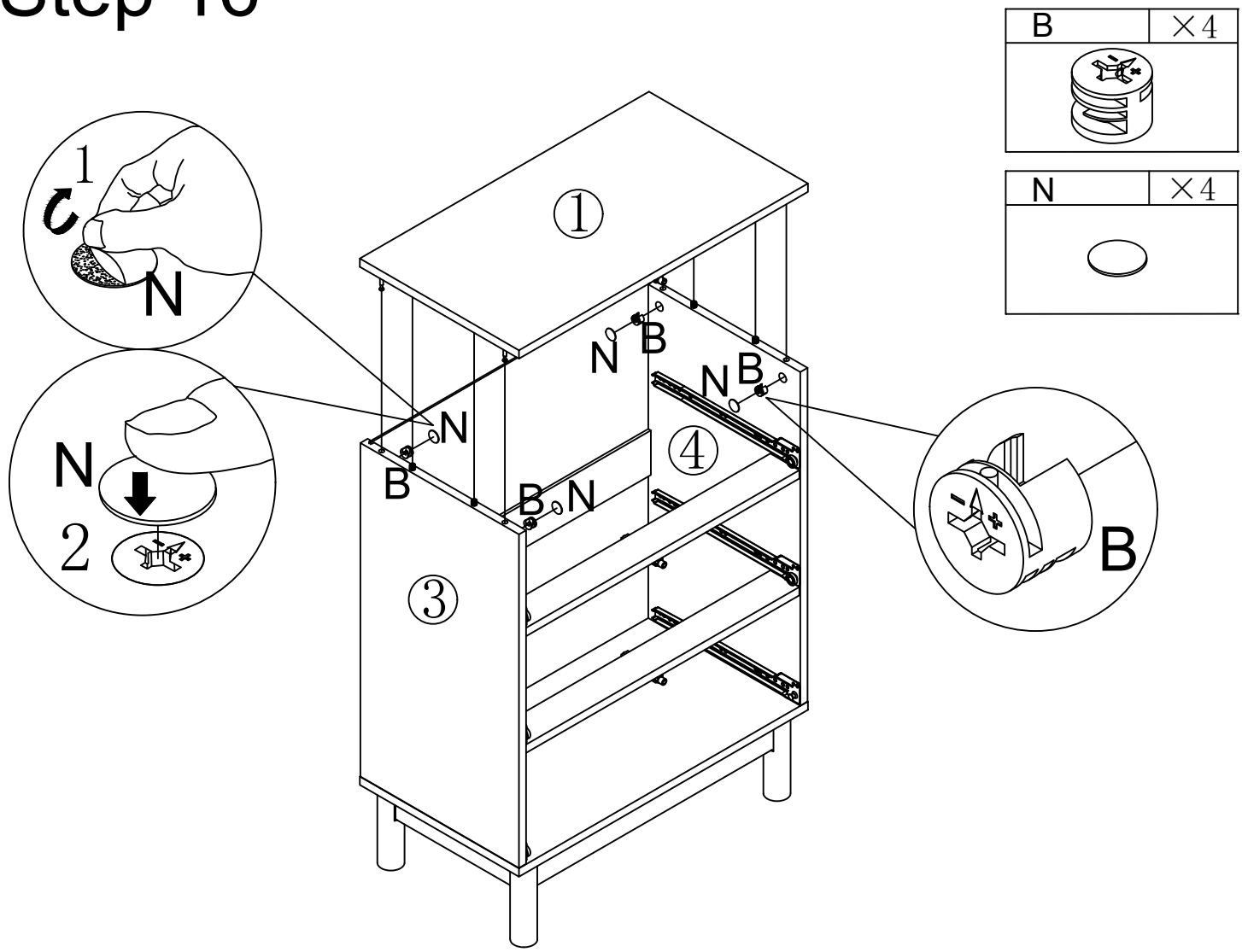

Step 17

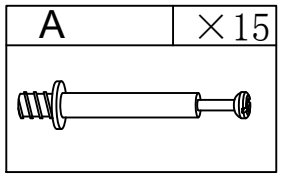

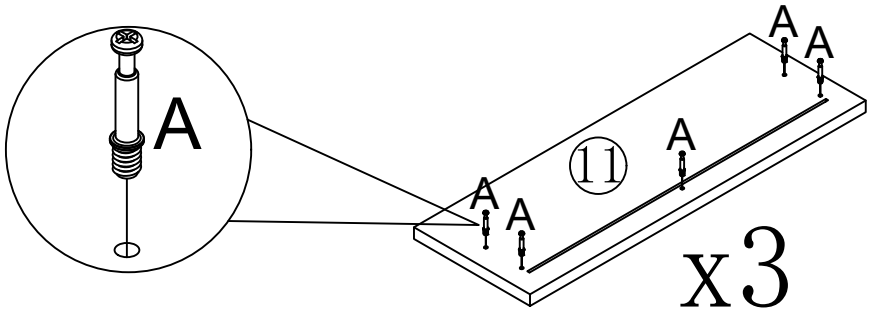

Step 18

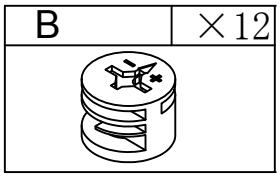

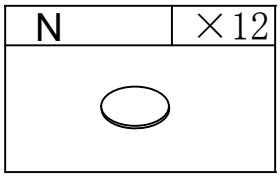

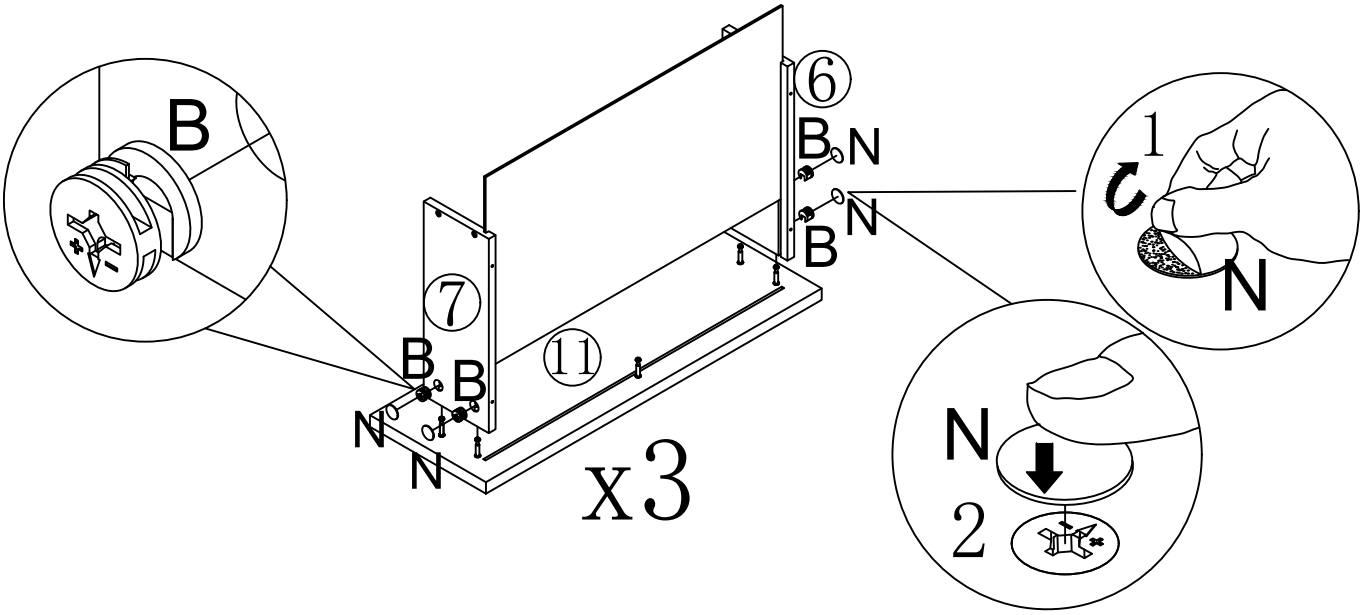

Step 19

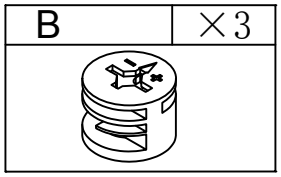

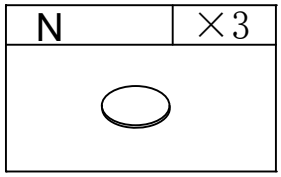

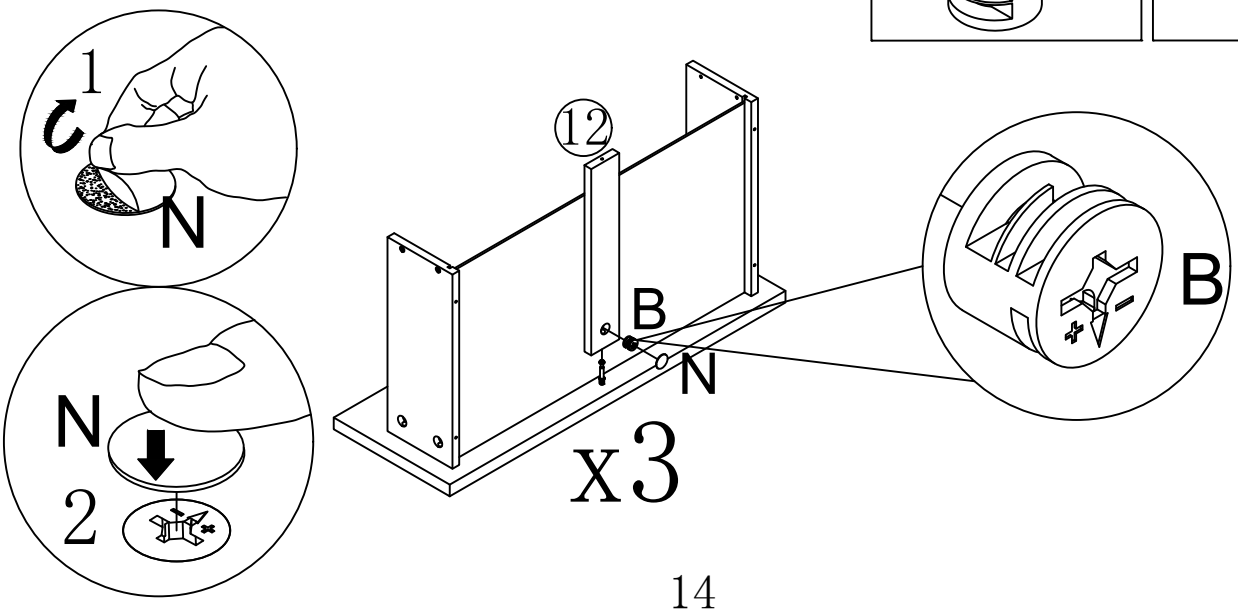

Step 20

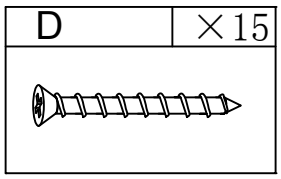

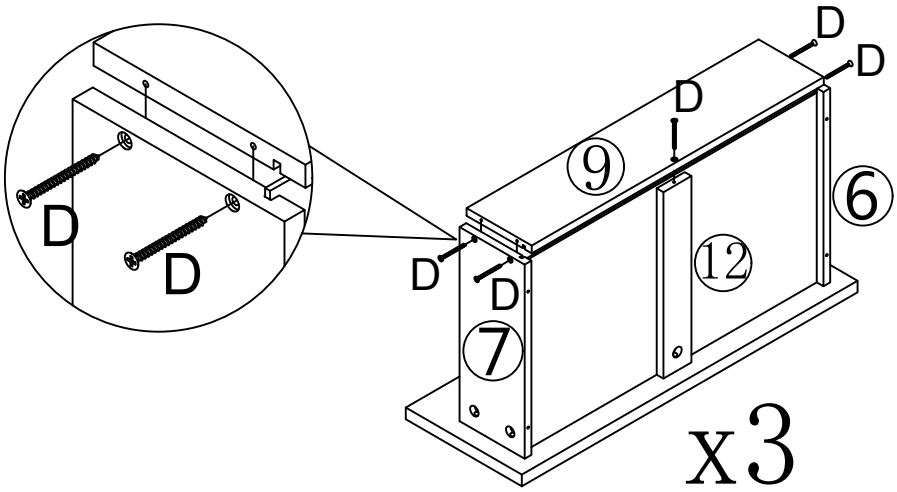

Step 21

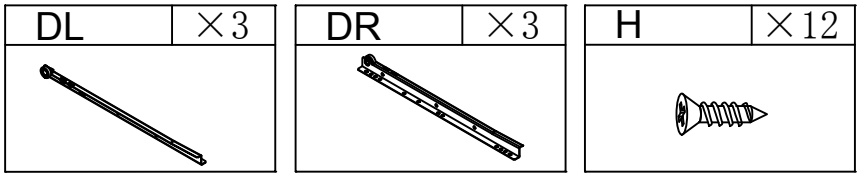

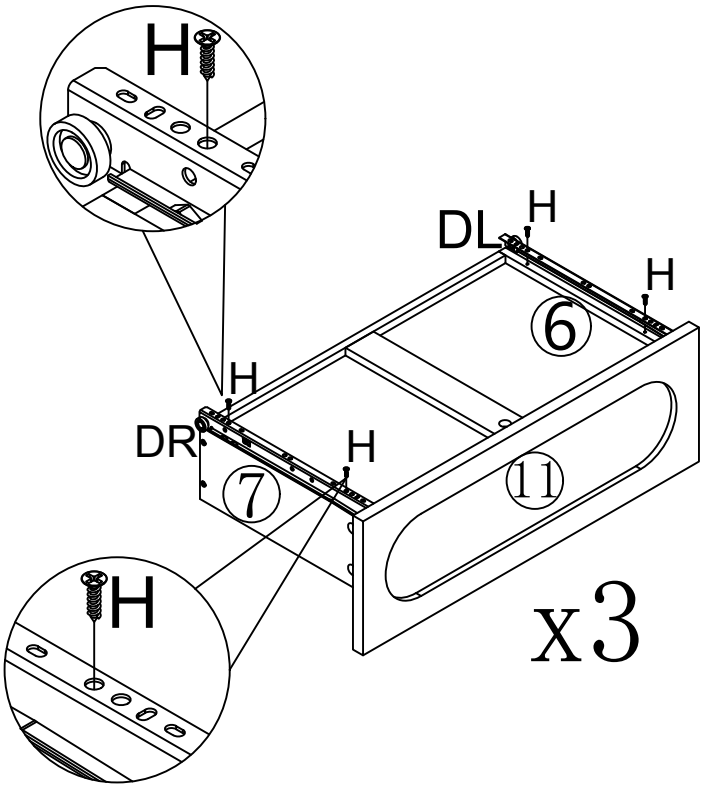

Step 22

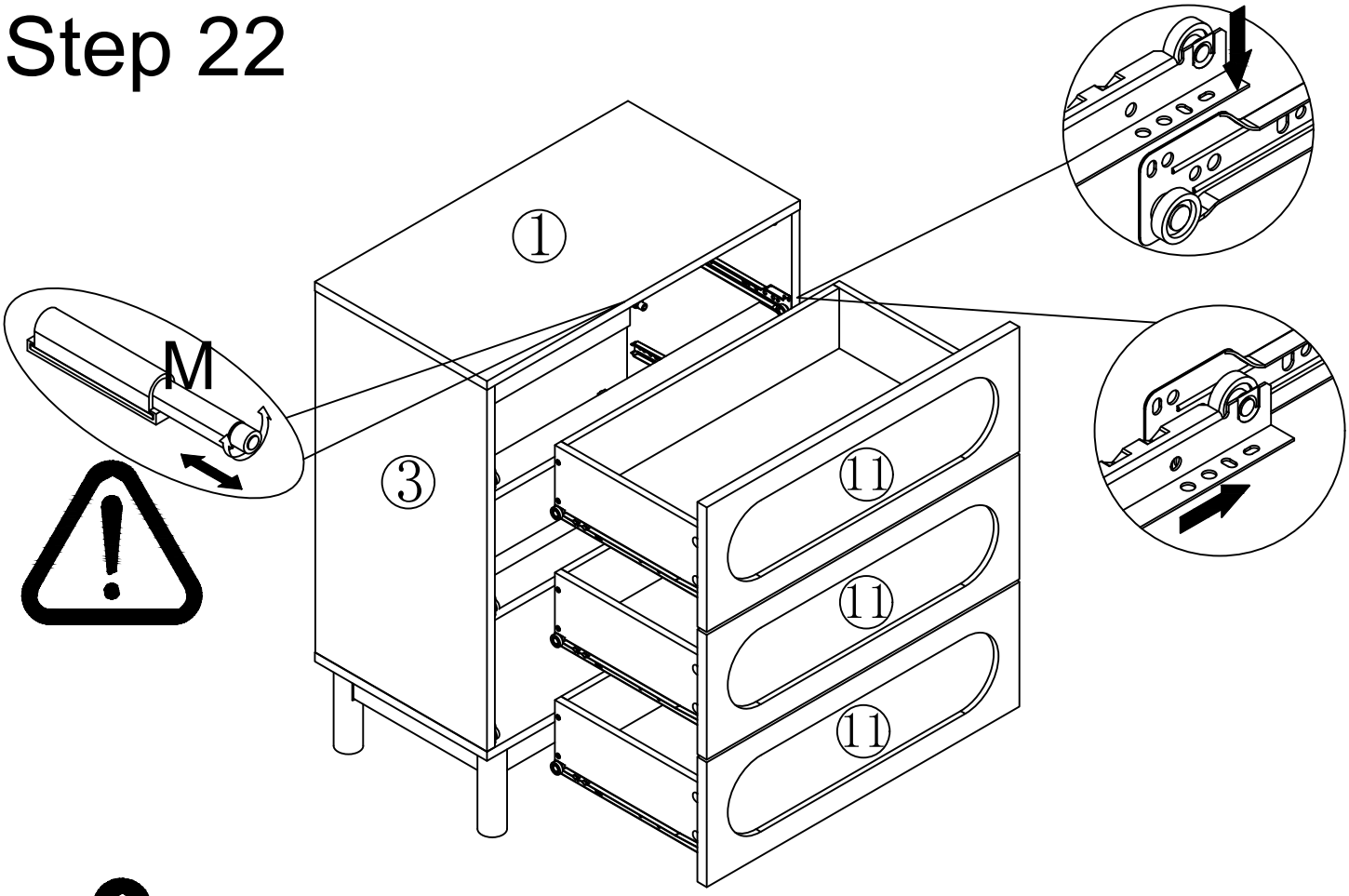

If the drawer is pressed and does not pop out, please adjust the rebound device as shown in the diagram

Step 23

E	×12

J	×12

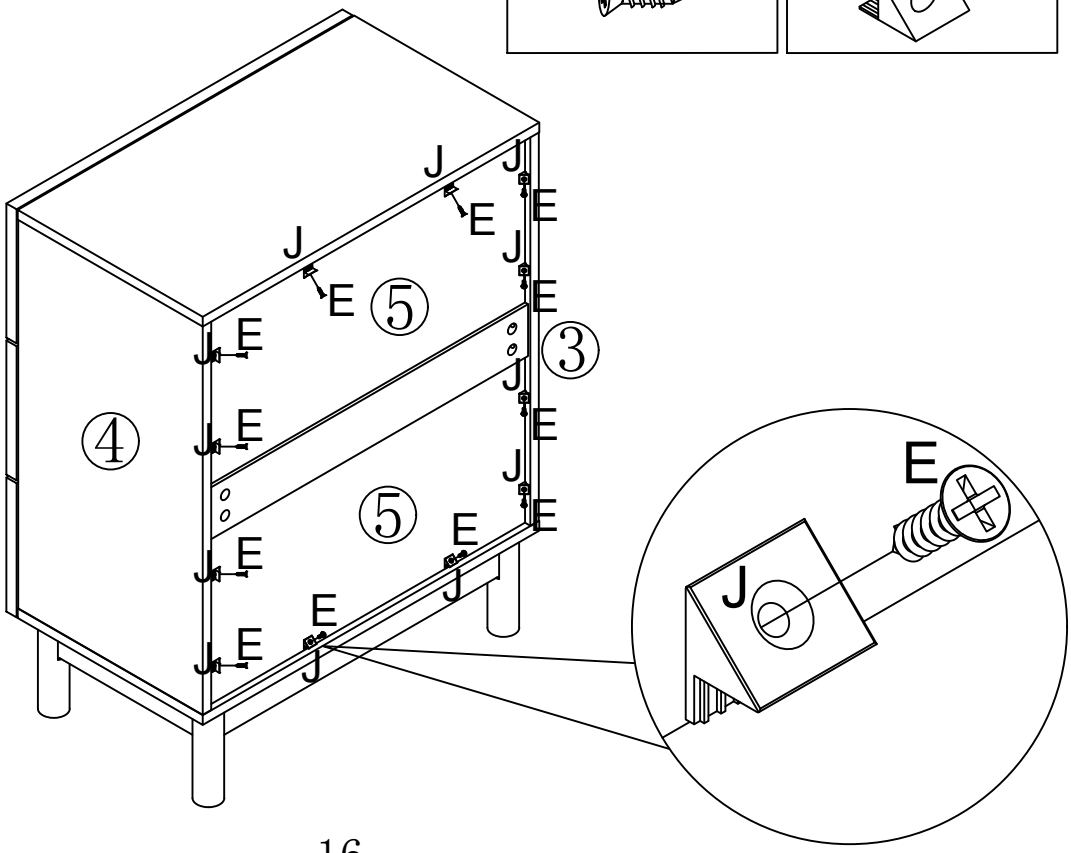

Step 24

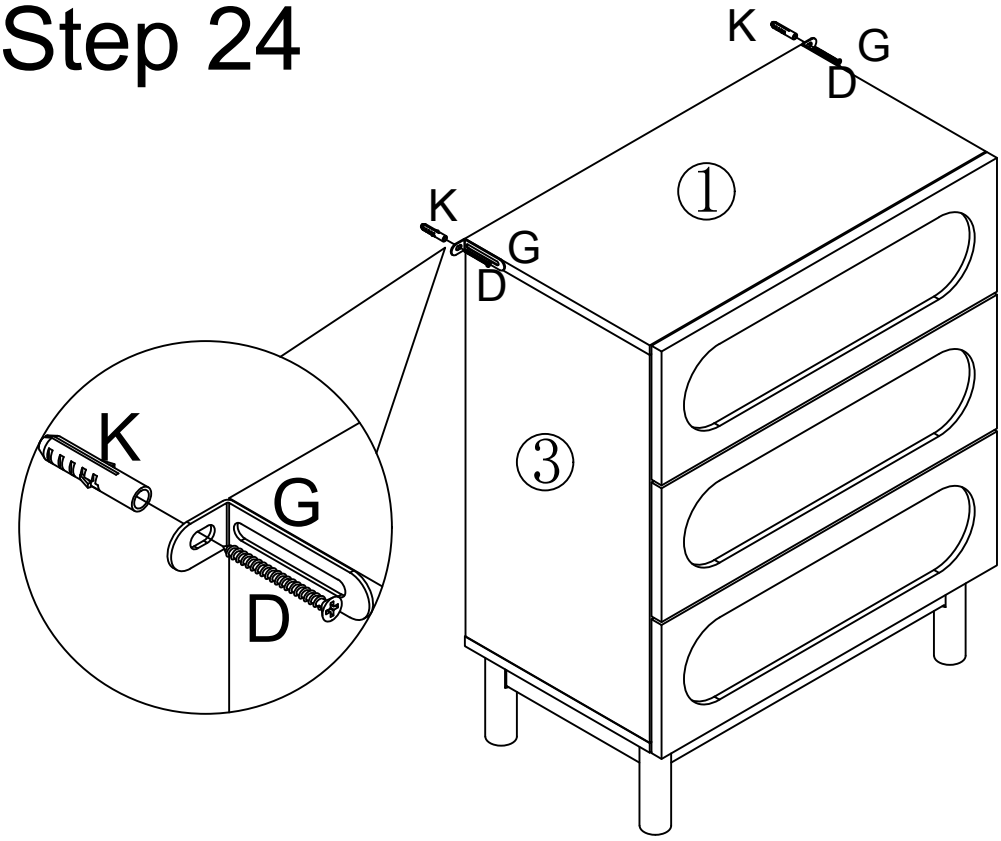

D	×2

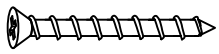

G	×2

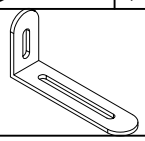

K	×2

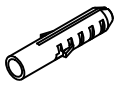

Step 25

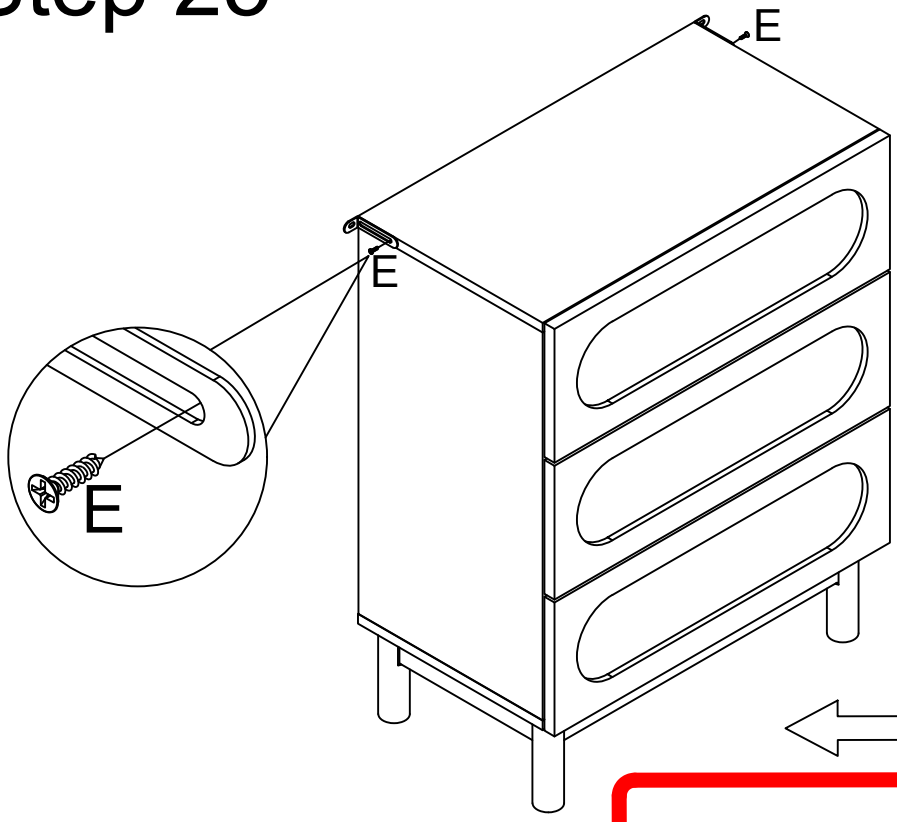

E	×2

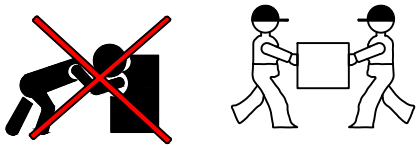

Two people work together to move the table.
Make sure you lift it off the ground.
Don't push and pull.