Intertek
3177588

Outdoor Gas Fire Pit Table

Assembly & Care instructions

Please read & retain for future reference

IF YOU PURCHASED THE GAS FIRE PIT TABLE ONLINE AND HAVE ANY QUESTIONS OR CONCERNS PLEASE CONTACT US WITH EMAIL OR TEXT

FOR YOUR SAFETY:

DO NOT STORE OR USE GASOLINE OR OTHER FLAMMABLE VAPORS AND LIQUIDS IN THE VICINTY OF THIS OR ANY OTHER APPLIANCE.

FOR YOUR SAFETY: READ BEFORE OPERATING!

WARNING: Improper installation,adjustment,alteration,service or maintenance can cause property damage,personal injury or loss of life.Refer to the owner's information manual provided with this appliance. Installation and service must be performed by a qualified installer,service agency,or the gas supplier.

WARNING: This gas appliance is designed for outdoor use only. It is not intended for installation in any building, garage, enclosed structure in or on a recreational vehicle or boat.

WARNING: This appliance should never be placed under any combustible construction or materials and should never be placed closer than forty-eight (48") from any side or back to any combustible construction or materials.

WARNING: Installation and service must be performed by a qualified technician, service agency, or gas supplies. Improper installation, adjustment, alteration, service or maintenance may cause injury or property damage.

WARNING: Follow all gas leak check procedures in the owner's manual prior to operation. Do not attempt to disconnect the gas or any gas fitting while appliance is in operation.

Warning

Do not store or use gasoline,or other flammable vapors and liquids,in the vicinity of this or any other appliance.

An LP-cylinder not connected for use shall not be stored in the vicinity of this or any other appliance.

WHAT TO DO IF YOU SMELL GAS:

1. Shut off gas supply.
2. Extinguish any open flames.
3. If odor continues, immediately call your gas supplier and follow the gas supplier's instructions.
4. If you cannot reach your gas supplier, call the fire department.

LIGHTING INSTRUCTIONS:

1. Remove protective storage cover and locate the manual gas control valve and igniter button on the pit.
2. Make sure fuel supply is properly connected and turned on at the source/tank.
3. Depress igniter button until you hear it sparking. You will hear a small popping noise. Keep igniter button pushed in while turning the fuel flow valve to the full flow position at the fire pit. The fire pit should light within 15 seconds. If you do not hear the igniter sparking, you may need to replace the battery. Replace with a standard AAA battery, located directly behind the rubber push button knob (unscrew knob to access battery). If a flame does not start within 20 seconds, shut off all gas supply and wait FIVE (5) minutes to allow all gas fumes to clear. Re-try or go to trouble-shooting and start from Step 1 again.

TO TURN OFF GAS:

Turn the ON/OFF valve to the "OFF" position at the firepit for the natural gas unit. For LP units, turn the ON/OFF valve to the "OFF" position on the fire pit and then turn the valve on the LP tank to the "OFF" position clockwise.

THE GAS SUPPLY MUST BE TURNED OFF AT THE LP GAS SUPPLY CYLINDER WHEN THIS APPLIANCE IS NOT IN USE.

WARNING: IF THE INFORMATION IN THE OWNER'S MANUAL IS NOT FOLLOWED EXACTLY, A FIRE OR EXPLOSION MAY RESULT, CAUSING PROPERTY DAMAGE, PERSONALINJURY OR LOSS OF LIFE.

Keep the instructions for future reference

Do not use this appliance if any part has been under water. Immediately call a qualified service technician to inspect the appliance and to replace any part of the control system and any gas control that has been under water;”

WARNING SAFETY RULES

PLEASE READ THE FOLLOWING SAFETY RULES PRIOR TO OPERATION OF THE HEATER

DANGER
FIRE OR EXPLOSION HAZARD

If you smell gas:

- Shut off gas to the appliance.
- Extinguish any open flame.
- If odor continues,leave the area immediately.
- After leaving the area,call your gas supplier or fire department.

Failure to follow these instructions could result in fire or explosion,which could cause property damage,personal injury,or death.

WARNING:For Outdoor Use Only

Installation and service must be performed by a qualified installer,service agency,or the gas supplier.

INSTALLER:Leave this manual with the appliance.
CONSUMER:Retain this manual for future reference.

DANGER



RISQUE DE MONOXYDE DE CARBONE

This appliance can produce carbon monoxide which has no odor.

Using it in an enclosed space can kill you.

Never use this appliance in an enclosed space such as a camper, tent, car or home.

WARNING:If the information in this manual is not followed exactly,a fire or explosion may result causing property damage,personal injury,or loss of life.

WARNING

Read the instructions before installation and use.

-This appliance must be installed and the gas cylinder stored in accordance with the regulations in force;

-Do not obstruct the ventilation holes of the cylinder housing;

-Do not move the appliance when in operation;

-Shut off the valve at the gas cylinder or the regulator before moving the appliance;

-The tubing or the flexible hose must be changed within the prescribed intervals;

-Use only the type of gas and the type of cylinder specified by the manufacturer;

-Do not use the appliance in big wind weather.It is advisable to fit the dress guard available from the manufacturer.Failure to fit this dress guard will result in a potential hazard to clothing when approaching the appliance;

-The injector is installed by the manufacturer only.Do not connect the gas cylinder directly to the appliance without regulator. Use only the type of gas and the type of cylinder specified in the instructions.

-This appliance is intended for decorative purposes;

- Not for domestic use!

-These instructions are only valid if the country symbol appears on the instruction manual and on the appliance.

TABLE OF CONTENTS

Caution.....6

Heater Stand and Location.....7

Gas Requirements.....7

Leakage Test.....7

Operation And Storage.....8

Cleaning and Care 10

Assembly Parts.....11

Parst List.....15

Problems Check List 16

CAUTION

PLEASE READ CAREFULLY THE FOLLOWING SAFETY GUIDELINES BEFORE OPERATION.

- Do not use the fire pit indoors, as it may cause personal injury or property damage.
- This outdoor fire pit is not intended to be installed on recreational vehicles and/or boats.
- Installation and repair should be done by a qualified service person.
- Improper installation adjustment, alteration can cause personal injury or property damage.
- Do not attempt to alter the unit in any manner.
- Never replace or substitute the regulator with any regulator other than the factory. suggested replacement.
- Do not store or use gasoline or other flammable vapors or liquids in the heater unit.
- The whole gas system, hose, regulator, pilot or burner should be inspected for leaks or damage before use, and at least annually by a qualified service person.
- All leak tests should be done with a soap solution.
- Never use an open flame to check for leaks.
- Do not use the heater until all connections have been leak tested.
- Turn off the gas valve immediately if smell of gas is detected. Turn Cylinder Valve OFF. If leak is at Hose/ Regulator connection: tighten connection and perform another leak test If bubbles continue appearing should be returned to hose's place of purchase. If leak is at Reguator/Cylinder Valve connection: disconnect, reconnect, and perform another leak check. If you continue to see bubbles after several attempts, cylinder valve is defective and should be returned to cylinder's place of purchase.
- Do not transport heater while it's operating.
- Do not move the heater after it has been turned off until the temperature has cooled down.
- Keep the ventilation opening of the cylinder enclosure free and clear of debris.
- Do not paint the radiant screen, control panel or top canopy reflector.
- Control compartment, burner and circulation air passageways of the heater must be kept clean. Frequent cleaning may be required as necessary.
- The LP tank should be turned off when the heater is not in use.
- Check the fire pit immediately if any of the following occurs:
  - The fire pit does not reach temperature.
  - The burner makes popping noise during use (a slight noise is normal when the burner is extinguished).
  - Smell of gas in conjunction with extreme yellow tipping of the burner flames.
- The LP regulator/hose assembly must be located out of pathways where people may trip over it or in area where the hose will not be subject to accidental damage.
- Any guard or other protective device removed for servicing the heater must be replaced before operating the fire pit.
- Adults and children should stay away from high temperature surface to avoid burns or clothing ignition.
- Children should be carefully supervised when they are in the area of the fire pit.
- Clothing or other flammable materials should not be hung on the heater or placed on or near the fire pit.
- To change the gas cylinder in an amply ventilated area, away from any ignition source (candle, cigarettes, other flame producing appliances, ...);
- To check that the regulator seal is correctly fit and able to fulfill its function showed as photo right;
- To not obstruct the ventilation holes of the cylinder housing;
- To close the gas supply at the valve of the gas cylinder or the regulator after use;
- In the event of gas leakage, the appliance shall not be used or if alight, the gas supply shall be shut off and the appliance shall be investigated and rectified before it is used again;

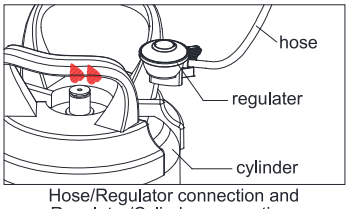

Hose/Regulator connection and Regulator/Cylinder connection

- To check the hose at least once per month, each time the cylinder is changed, or each time before long time no use.If it shows signs of cracking, splitting or other deterioration it shall be exchanged for new hose of the same length and of the equivalent quality;
- The use of this appliance in enclosed areas can be dangerous and is PROHIBITED;
- Read the instructions before using this appliance. The appliance must be installed in accordance with the instructions and local regulations.
- For connection of hose and regulator,and connection of regulator and hose, please refer to photo showed above.

Do Not use this appliance with an adjustable regulator. We suggest use this appliance with LPG cylinder of 5KG. The maximum diameter and the maximum height of the cylinder is 380mm and 450mm as shown in (Fig.1).

Pay attention when put the cylinder to the cylinder hole, ensure the hose connect to the cylinder not touch the hot surface. Keep the cylinder in place during operation. Never put spare cylinder in the same cylinder enclosure. Never block the way of shuting off the cylinder valve.
Warning: Shut off the gas cylinder when you smell gas.

1: maximum diameter
2: maximum height

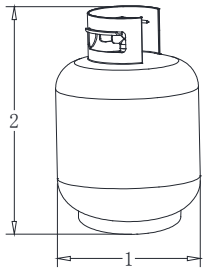

Fig.1

HEATER STAND AND LOCATION

- The heater is primarily for outdoor use only. Always ensure that adequate fresh air ventilation is provided.
- Always maintain proper clearance to combustible materials, i.e. top 153 cm and sides 122 cm minimum.
- Heater must be placed on level firm ground.
- Never operate heater in an explosive atmosphere like in areas where gasoline or other flammable liquids or vapors are stored.

GAS REQUIREMENTS

- Use propane, butane or their mixtures gas only.
- The pressure regulator and hose assembly to be used must conform to local standard codes.
- The installation must conform to local codes, or in the absence of local codes, with the standard for the storage and handling of liquid petroleum gases.
- A dented, rusted or damaged tank may be hazardous and should be checked by your tank supplier. Never use a tank with a damaged valve connection.
- The tank must be arranged to provide for vapor withdrawal from the operating cylinder.
- Never connect an unregulated tank to the heater.

LEAKAGE TEST

Gas connections on the heater are leak tested at the factory prior to shipment. A complete gas tightness check must be performed at the installation site due to possible mishandling in shipment or excessive pressure being applied to the heater.

- Make a soap solution of one part liquid detergent and one part water, The soap solution can be applied with a spray bottle, brush or rag. Soap bubbles will appear in case of a leak.
- The heater must be checked with a full cylinder.
- Make sure the safety control valve is in the OFF position.
- Turn the gas supply ON.
- In case of a leak, turn off the gas supply. Tighten any leaking fittings, then turn the gas supply on and re-check.
- Never leak test while smoking.

OPERATION AND STORAGE

Warning: User shall pour lava rocks fully to cover the whole burner before operation.

TO TURN ON THE FIRE PIT

1. Turn the control knob to the “OFF”position (Figure a).
2. Fully open LP cylinder valve.
Note: For initial start or after any cylinder change, hold Control Knob IN for 10 seconds to purge air from gas lines before proceeding.
3. Push in gas control knob and turn counterclockwise to “IGNITER”(Figure b) to light the fire pit. If needed, keep pressing and turning control knob counterclockwise until the heater lights (You should hear a clicking sound).
4. After fire pit lights, release control knob. Push in and turn the control knob to the “HIGH”(Figure c), then release control knob. If you want a lower temperature, push in the control knob and turn clockwise to the “LOW”. Note: If burner fails to remain lit, all valves should be closed and a waiting period of at least 5 minutes should pass before attempting to light.

TO TURN OFF THE FIRE PIT

1. To extinguish burner depress control knob and continue to turn it clockwise to OFF.
2. Turn cylinder valve clockwise to OFF and disconnect regulator when fire pit is not in use.

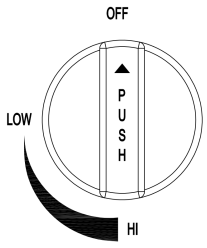

Figure a

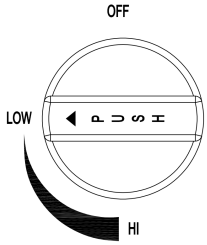

Figure b

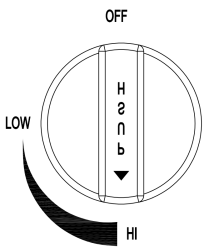

Figure c

OFF: the heater stop work
HI: maximum temperature position
LOW: minimum temperature position

Storage
1. Always close the gas valve of the gas cylinder after use or in case of a disturbance.
2. Remove the pressure controller and the hose.
3. Check the tightness of the gas valve and for damage. If you suspect a damage, have it changed by your gas dealer.
4. Never store liquid gas cylinder in a sub-terrain, or at places without adequate air ventilation.

A. Construction and characteristics

- Transportable terrace/fire pit with tank housing
- Casing in steel with powder-coating or stainless steel.
- Gas hose connections with metal clamp

B. Specifications

- Use propane,butane or their mixtures gas only.
- Max. wattage:50000BTU/Hr(14.65KW)
- Consumption:

- The hose and regulator assembly must conform to local standard codes. Regulator outlet pressure should meet the corresponding appliance
- category in B. Specification.
- The appliance requires approved hose in 0.7m length.

The instructions accompanying the appliance shall include the following;

a) When an appliance is for connection to a fixed piping system,the installation must conform with local codes,or in the absence of local codes with the National Fuel Gas Code,ANSI Z223.1•NFPA 54;National Fuel Gas Code;Natural Gas and Propane Installation Code,CSA B149.1;or Propane Storage and Handing Code,CSA B149.2,as applicable;

b) A statement that solid fuels shaa not be burned in this appliance;

c) The minimum inlet gas supply pressure: 25 Psi;

d) The maximum inlet gas supply pressure: 250 Psi;

Instructions to keep the appliance area clear and free from combustible materials,gasoline,and other flammable vapors and liquids;

CLEANING AND CARE

- Wipe off powder coated surfaces with soft, moist rag. Do not clean heater with cleaners that are combustible or corrosive.
- Remove debris from the burner to keep it clean and safe for use.
- Cover the burner unit with the optional protective cover when the heater is not in use.

PARTS AND SPECIFICATIONS

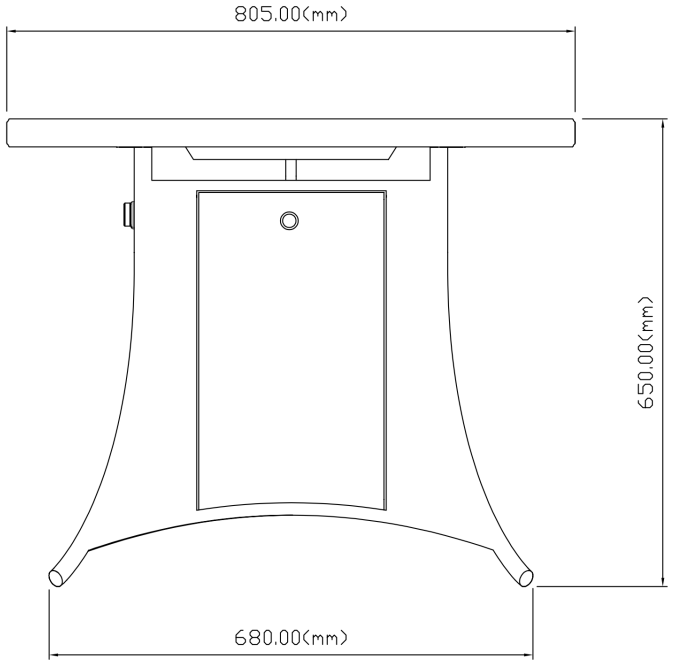

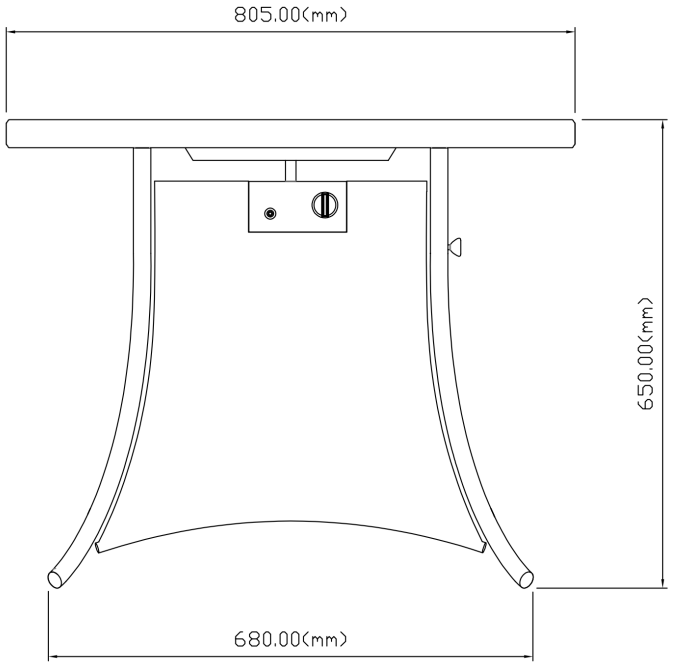

ASSEMBLY PARTS

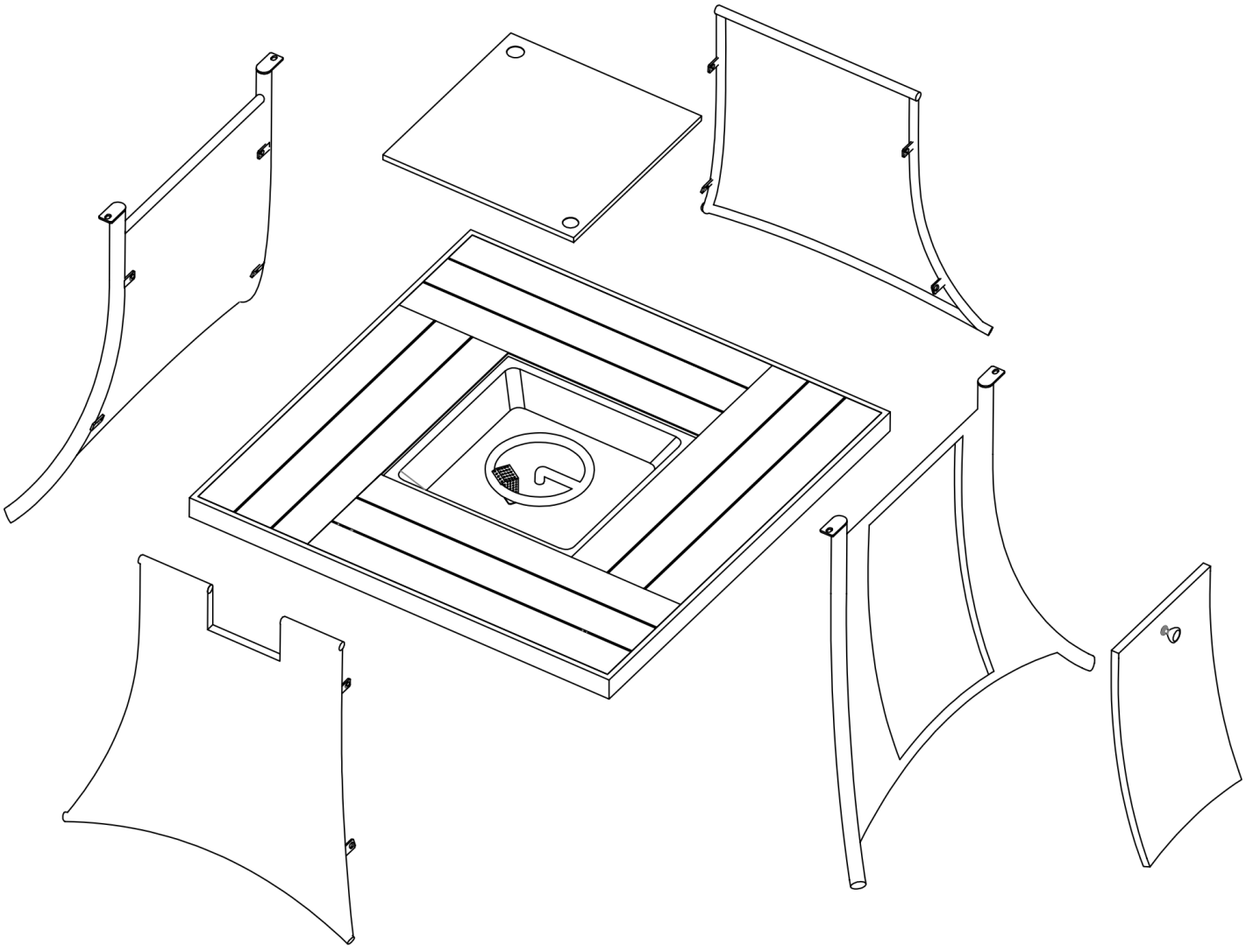

PARTS LIST

Part	Description	Description	Qty
A	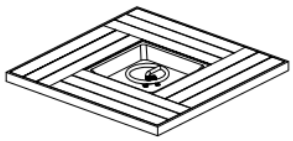	Table Top	1PC
B		Left Side Panel	1PC
C		Right Side Panel	1PC
D		Rear Panel	1PC
E		Front Side Panel	1PC
F		Door	1PC
G		Lid	1PC
H		Bolt M6*15	13PCS
I		Washer M6	13PCS
J		Allen wrench	1PC

Step 1: Use screws（H） and washers（I） to connect the rear（D）and front side panels（E） to the right side panel（C）.

NOTE: Please fully tighten all bolts at this time.

C		X1
D		X1
E		x1
H		x4
I		x4

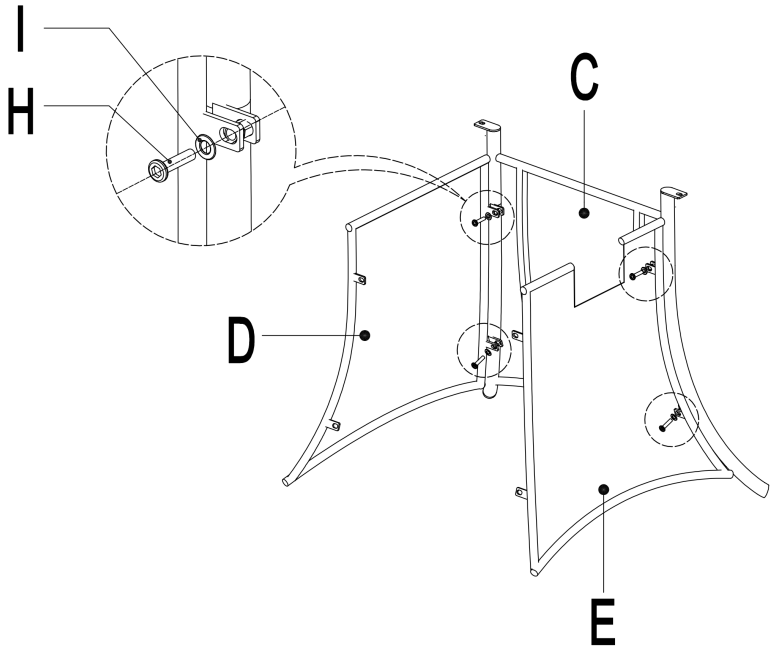

Step 2: Connect the left panel（B） to the front（E） and rear panels（D） using screws（H） and washers（I）

NOTE: Please do not fully tighten bolts until unit is fully assembled.

B		x1
H		x4
I		x4

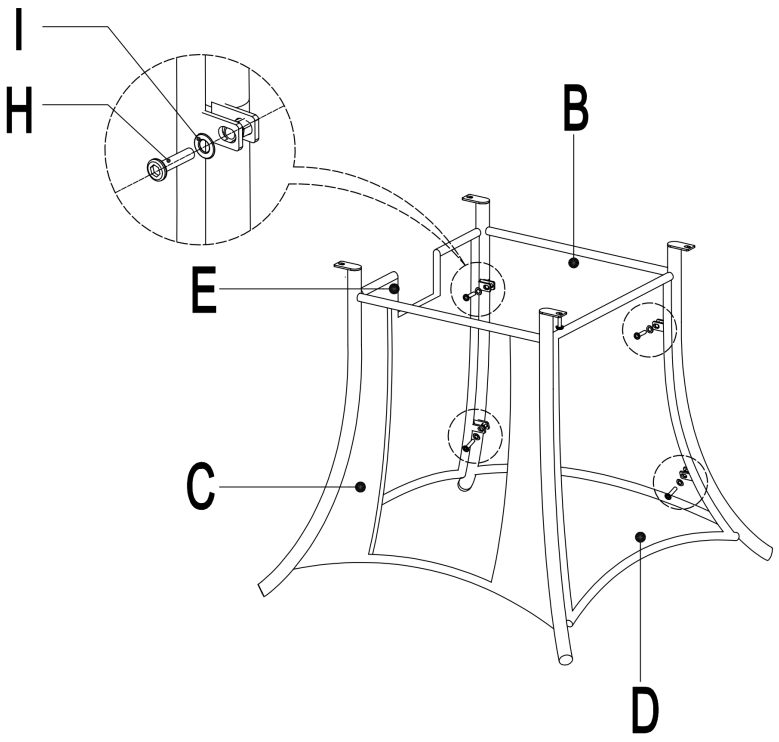

Step 3: Connect the desktop（A） to the base using screws（H） and washers（I）.

NOTE: Please do not fully tighten bolts until unit is fully assembled.

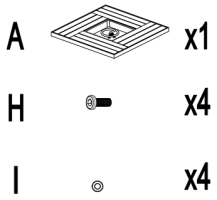

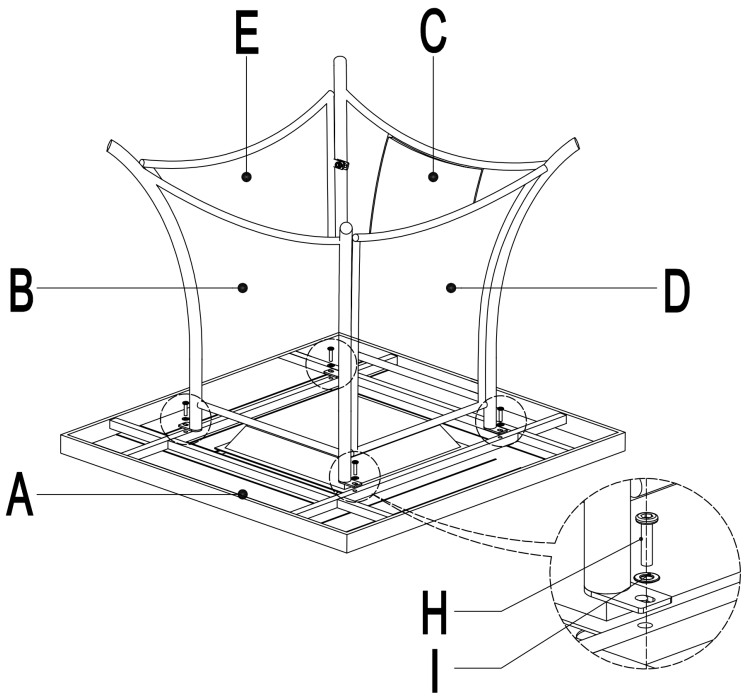

Step 4：Place the lid（G） above the tabletop stove basin and place the door（F） into the right panel door frame.

NOTE: Please fully tighten all bolts at this time.

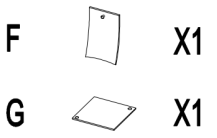

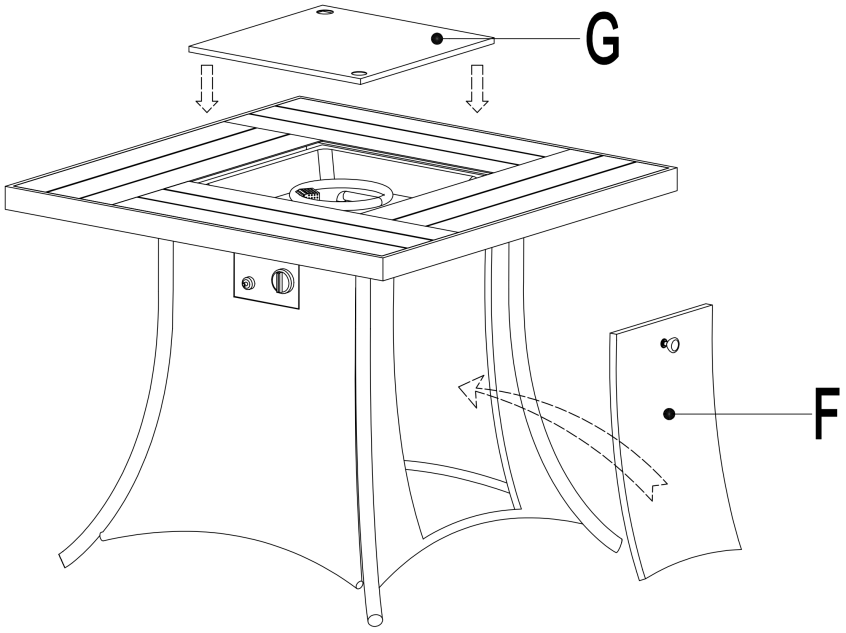

Cleaning and Maintenance

Clean frame with mild soapy water, rinse thoroughly. Dry frame parts completely. Do not use bleach, acid, or other solvents on the fabric and metal parts.

We recommend the use of furniture covers to protect the patio fire pit when not in use.

Inspect and tighten all bolts on a regular basis to ensure proper performance and safety.

In order to prolong the life and beauty of your patio fire pit table, we recommend storing it in a dry and protective area during off season periods.

PROBLEMS CHECK LIST

PROBLEM	PROBABLE CAUSE	SOLUTION
Burner will not light	Pressure is low	Tank near empty Refill LPG tank.
	Opening blocked	Remove and clean
	Control not ON	Turn valve to ON
	Thermocouple bad	Replace thermocouple
	Pilot light assembly bent	Place pilot properly
	Not in correct location	Position properly and retry