PRODUCT SPECIFICATION

Model: UUMSB3022-PK1

Series	Fusion Workstation
Material	18 Gauge, Type 304 stainless steel
Installation Type	Undermount
Configuration	Single bowl
Finish	Soft satin brushed finish
Overall Dimensions	30 1/2" x 18 1/4" x 9"
Bowl Dimensions	29" x 16" x 8 3/4"
Drain Size	3 1/2"
Finish Available	Stainless Steel
Minimum cabinet size	33"
Template Included	Yes
Clips Included	Yes
Drain Location	Rear
Accessories Included	Strainer, Bottom grid, Cutting board and Drying rack



ACCESSORY
Bottom Grid - GR-4014
Strainer - L-5
Drying Rack - DR1712DGR5S
Cutting Board - CB1712ACR5

Stocked Color Options



Stainless Steel

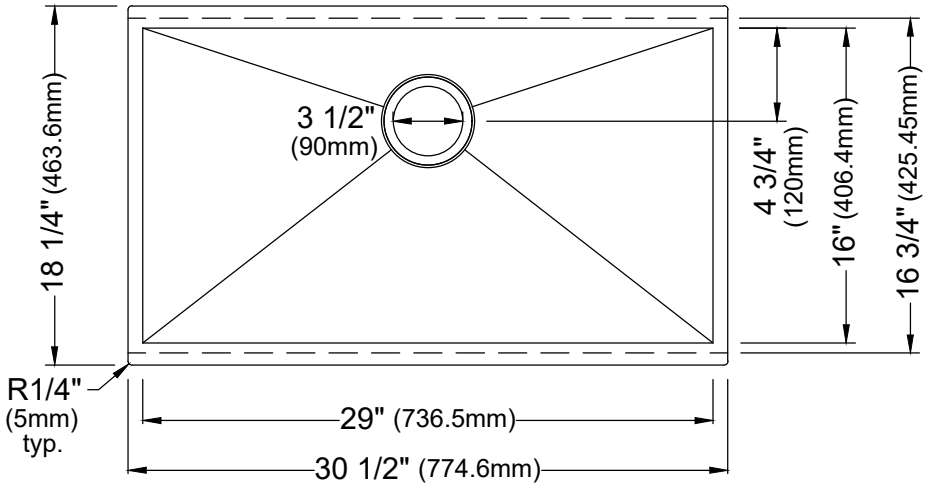

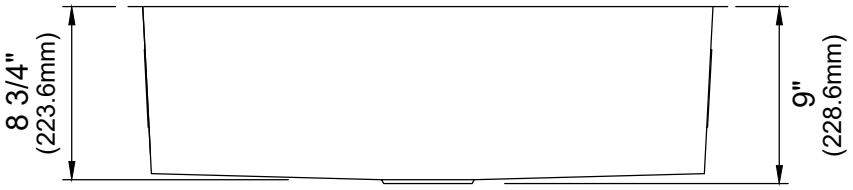

Listing and certifications:
cUPC

Limited lifetime warranty

We reserve the right to update product specifications without notice. Please visit karran.com for the most current specification sheets. All dimensions are accurate to 1/4". REV 09-2026