Assembly Instructions

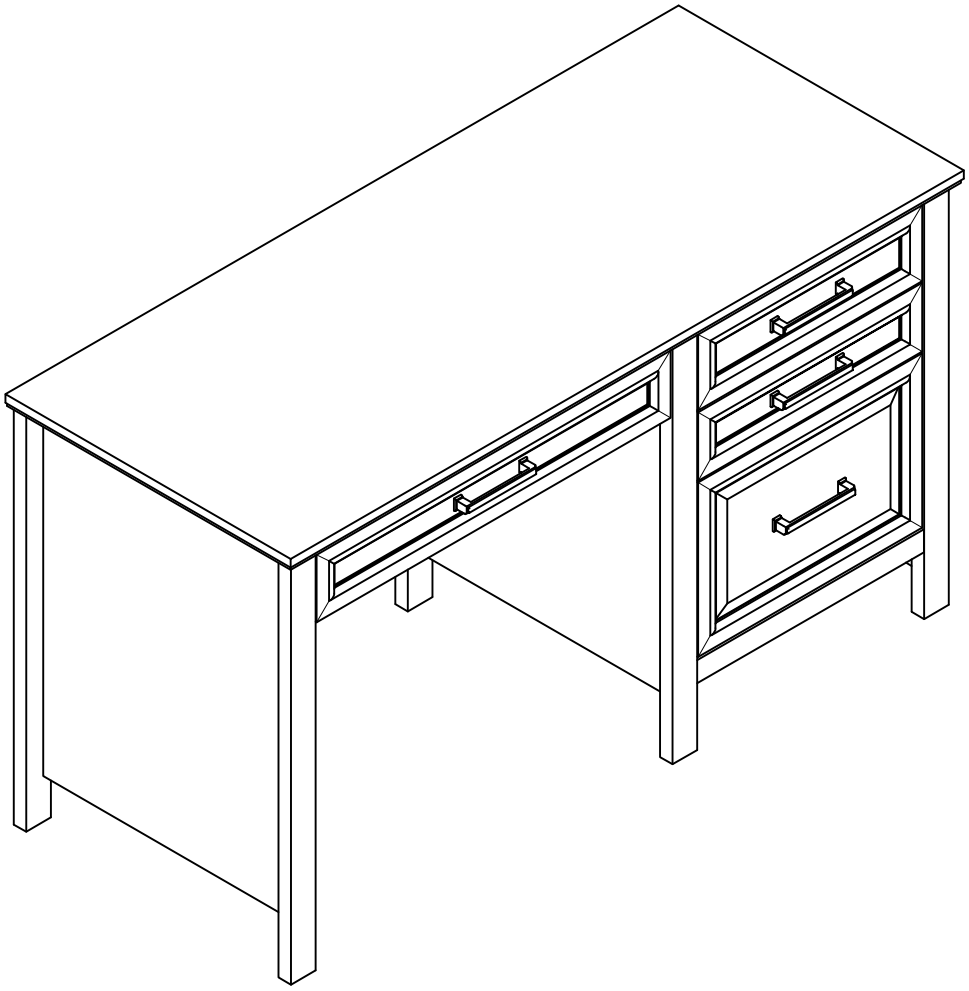

General Assembly Guidelines

I. Ensure that all parts and hardware are available before beginning assembly.

II. Follow each step carefully to ensure the proper assembly of this product.

III. Two people are recommended for ease in the assembly of this product.

IV. The three main types of hardware used to assemble this product are : wood dowels , screws and bolts.

V. The provided glue is to secure wood dowels in place . When first inserting dowels , locate the appropriate hole for the dowel , place a small amount of glue in the hole and insert the dowel . Wipe away excess glue immediately.

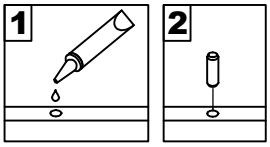

In future assembly steps when dowels are necessary to attach assembly parts together , place a small amount of glue on the end of the dowel before attaching parts together . Wipe away excess glue immediately.

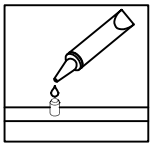

VI. A Phillips head screwdriver is required for the assembly of this product .

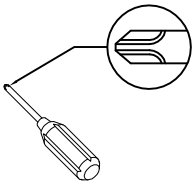

VII. Power tools should not be used to assemble this product .

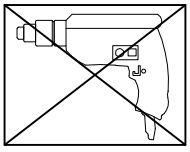

Parts List

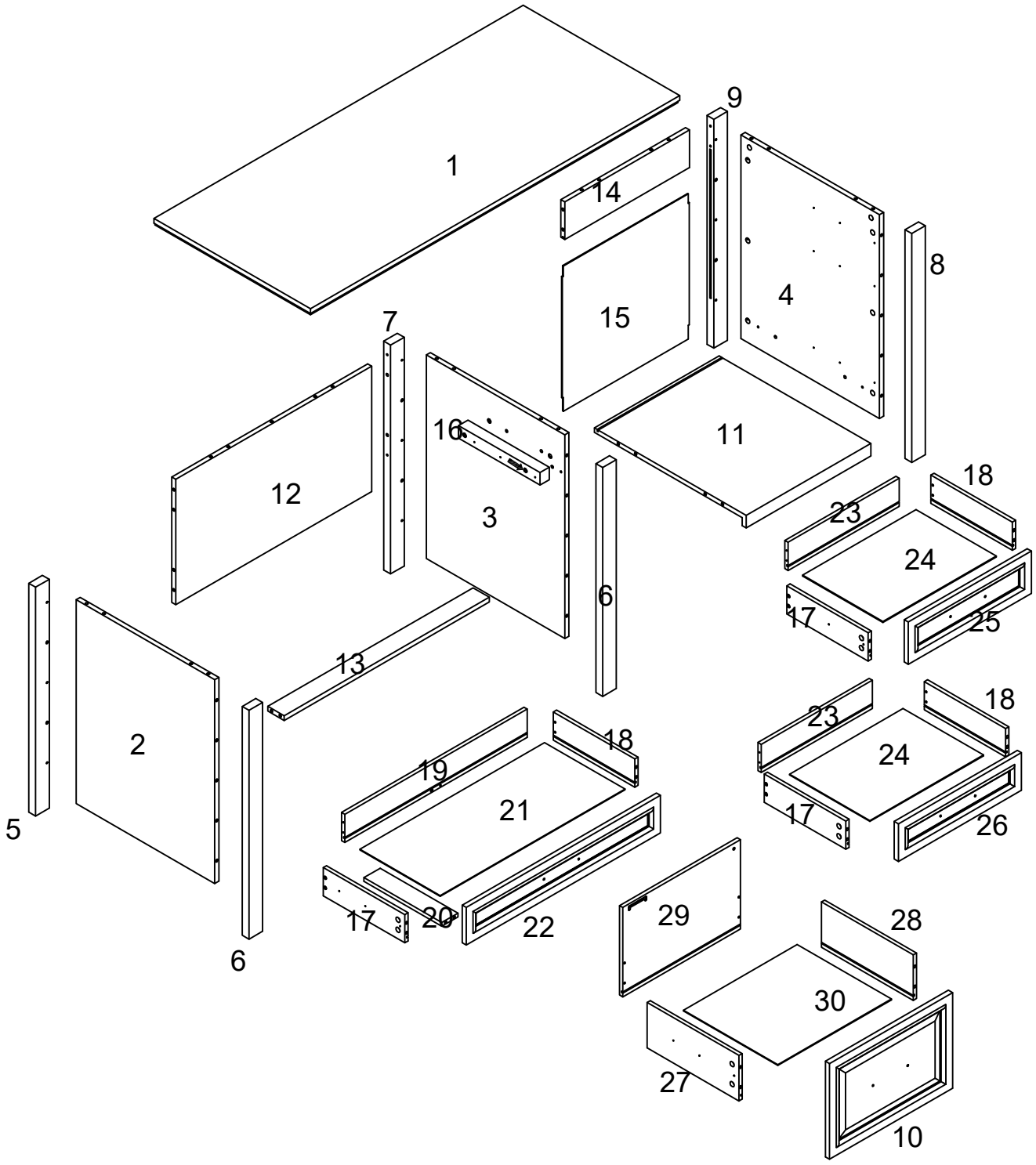
1
9
14
8
4
15
7
16
11
12
3
18
23
24
6
17
25
13
2
18
23
24
19
21
17
26
5
17
20
22
29
28
6
30
27
10

Hardware List

A		Ø8x30mm	Wooden dowel	36	pcs
B	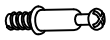	Ø6x32mm	Cam bolt	60	pcs
C		Ø15x11mm	Cam lock	43	pcs
D		Ø15x9mm	Cam lock	17	pcs
E		Ø30mm	Sticker	60	pcs
F		M 4	Hex Key	1	pc
G		M6*35mm	Bolt	2	pcs
H		Ø4x32mm	Screw	17	pcs
I			Handle	4	pcs
J		Ø4x9mm	Bolt	8	pcs
K	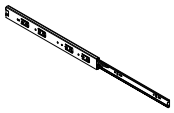	12"	Drawer slides	4	pcs
L		Ø3x12mm	Screw	48	pcs
M		Ø6	Iron Hanger	2	pcs
N			Plastic wedge	4	pcs
O		Ø3x17mm	Screw	4	pcs
P			Glue tube	2	pc

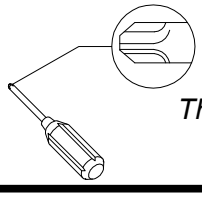

Philips head screwdriver required for assembly
(not included)

The hardware quantities listed above are required for proper assembly.
Some extra hardware may also have been included.

Step 1

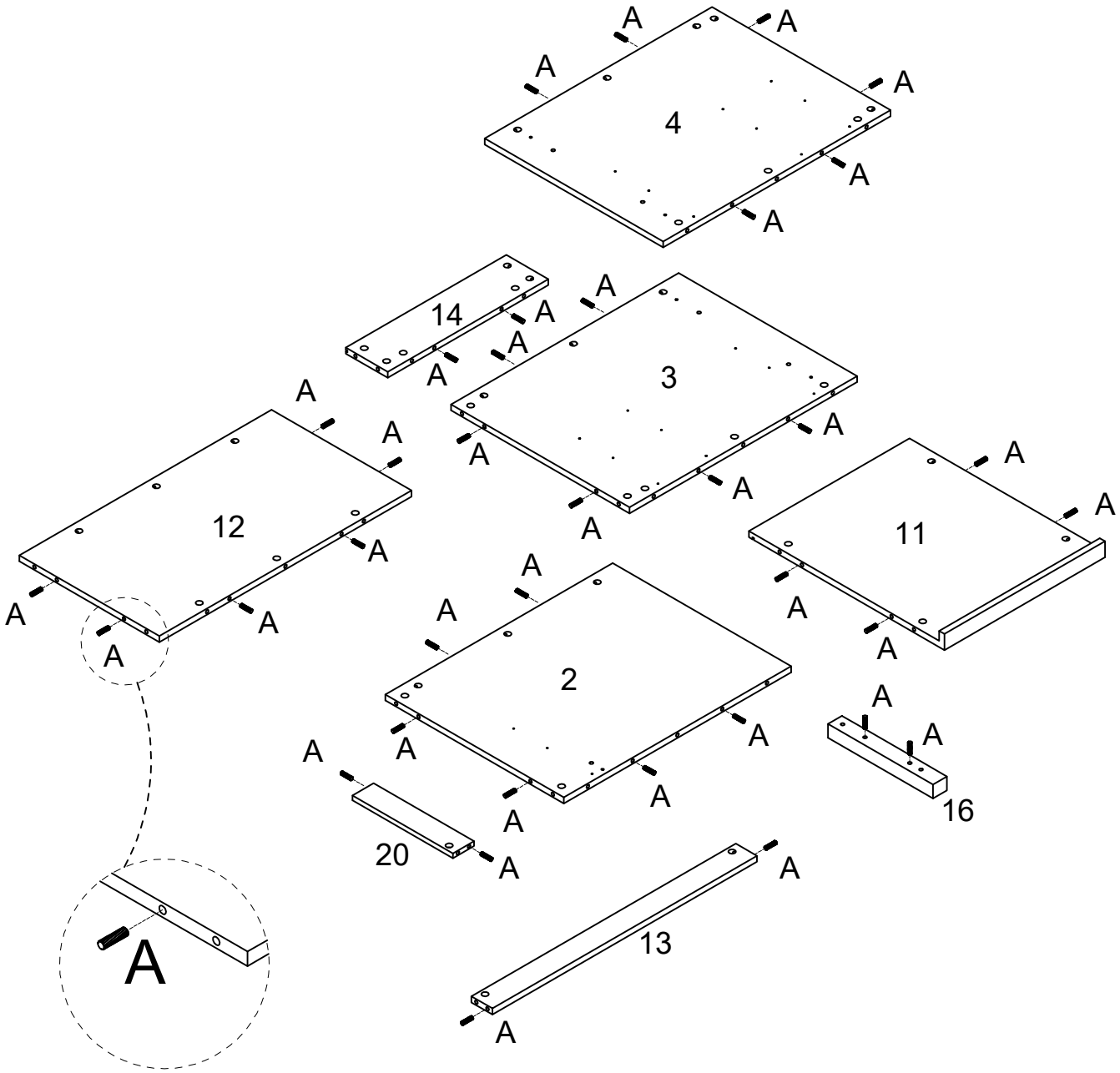

A
X36

Step 2

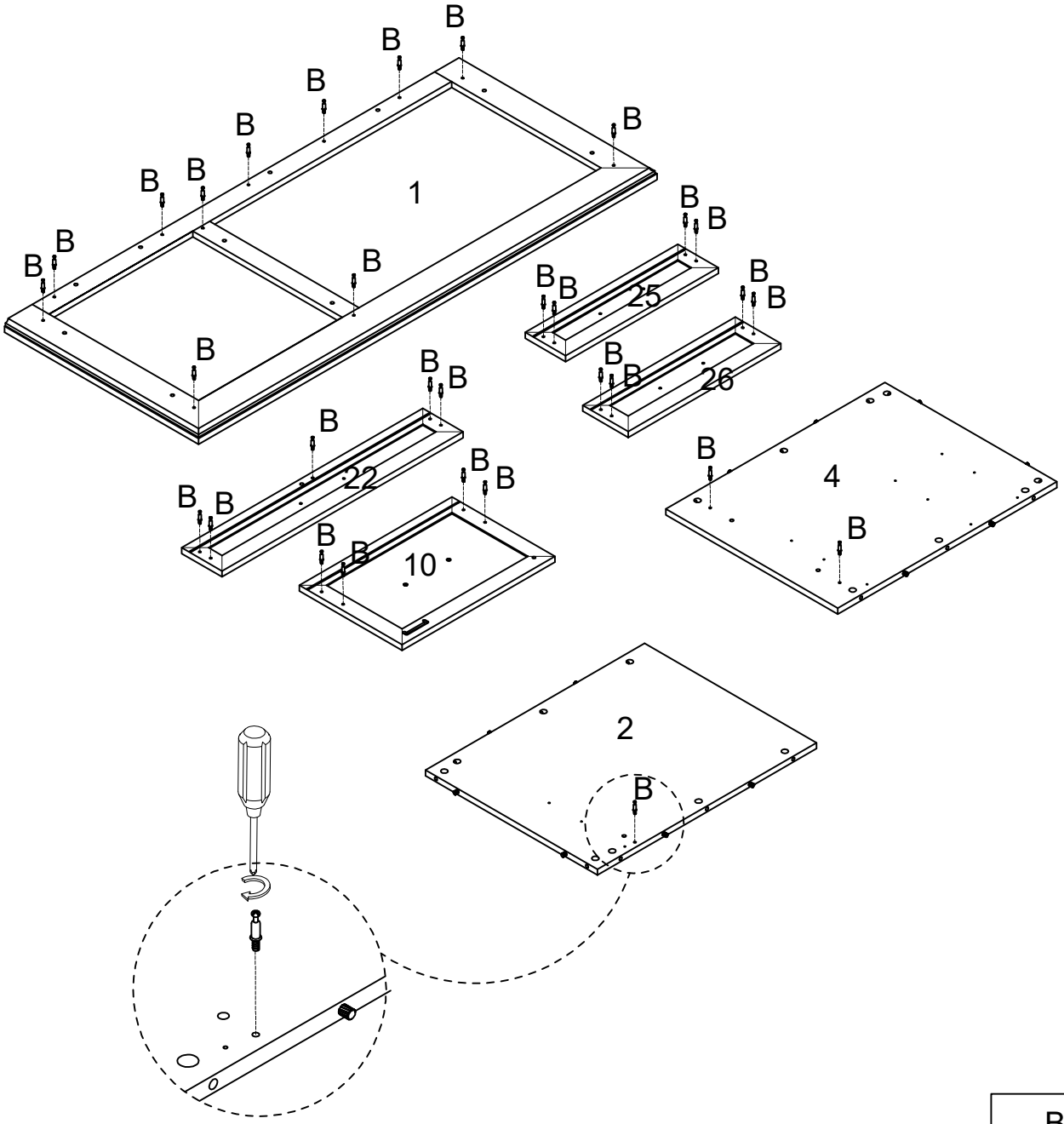

B
X31

Step 3

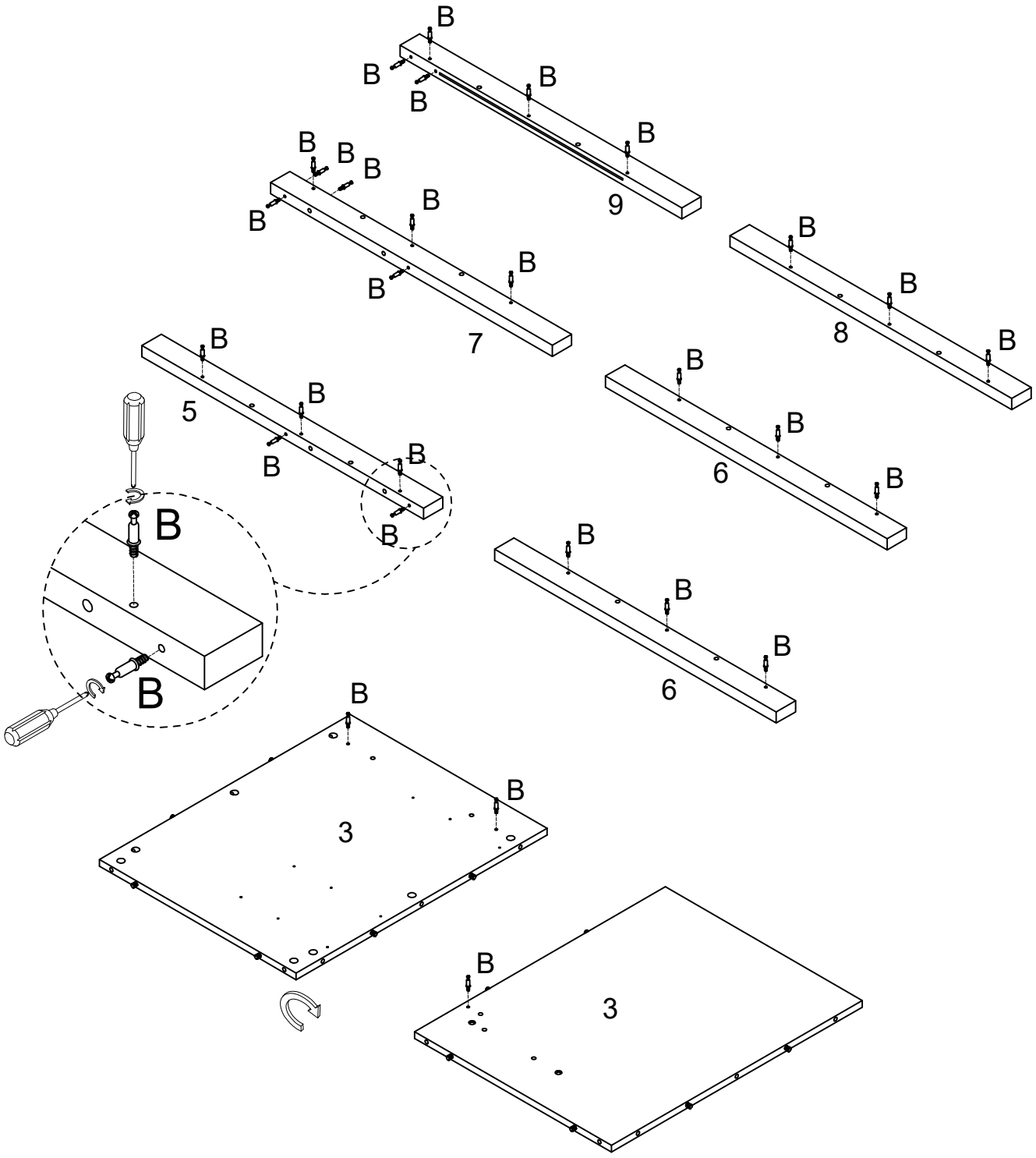

B
X29

Step 4

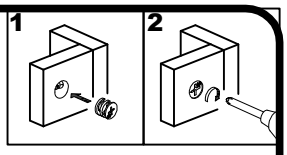

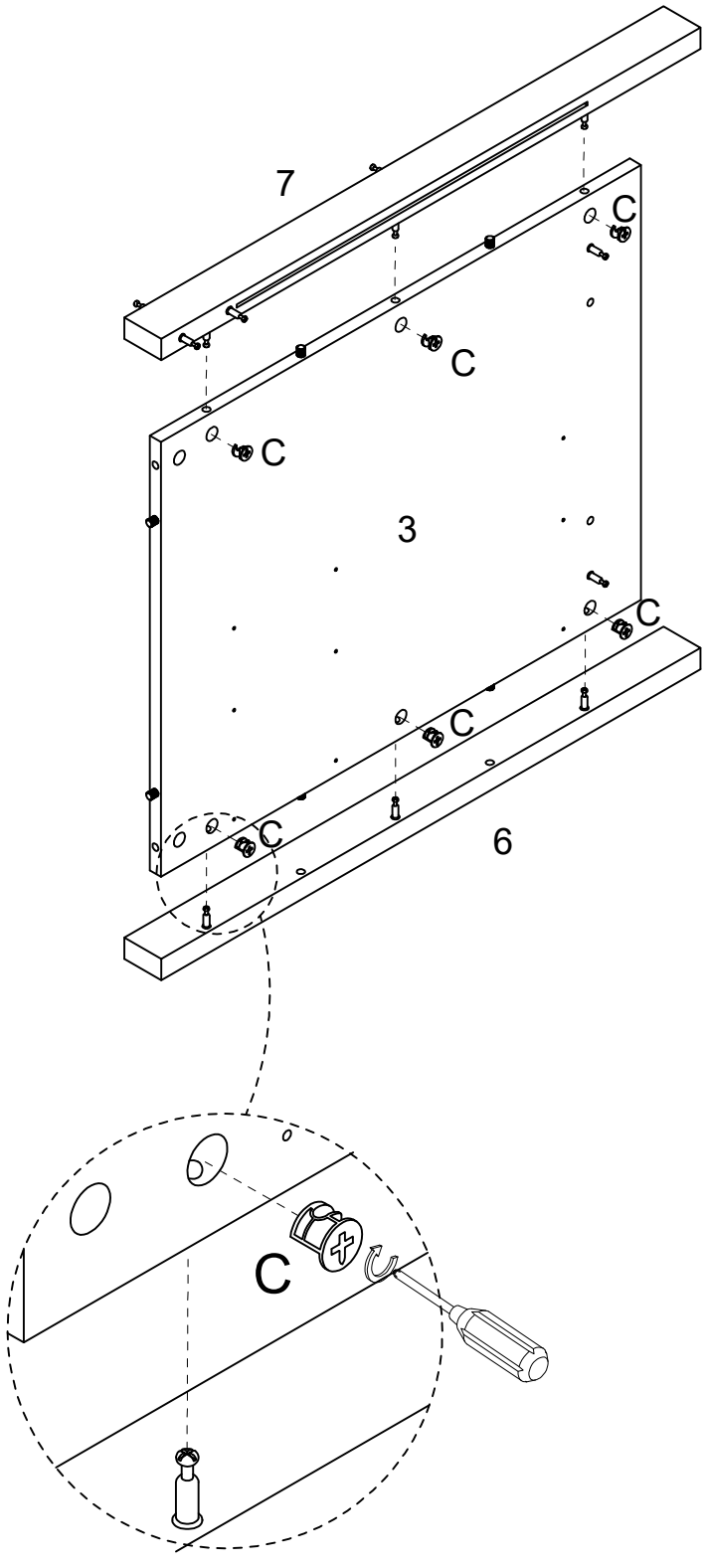

C
X6

Step 5

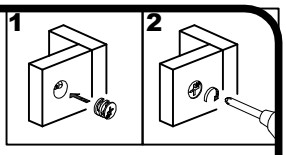

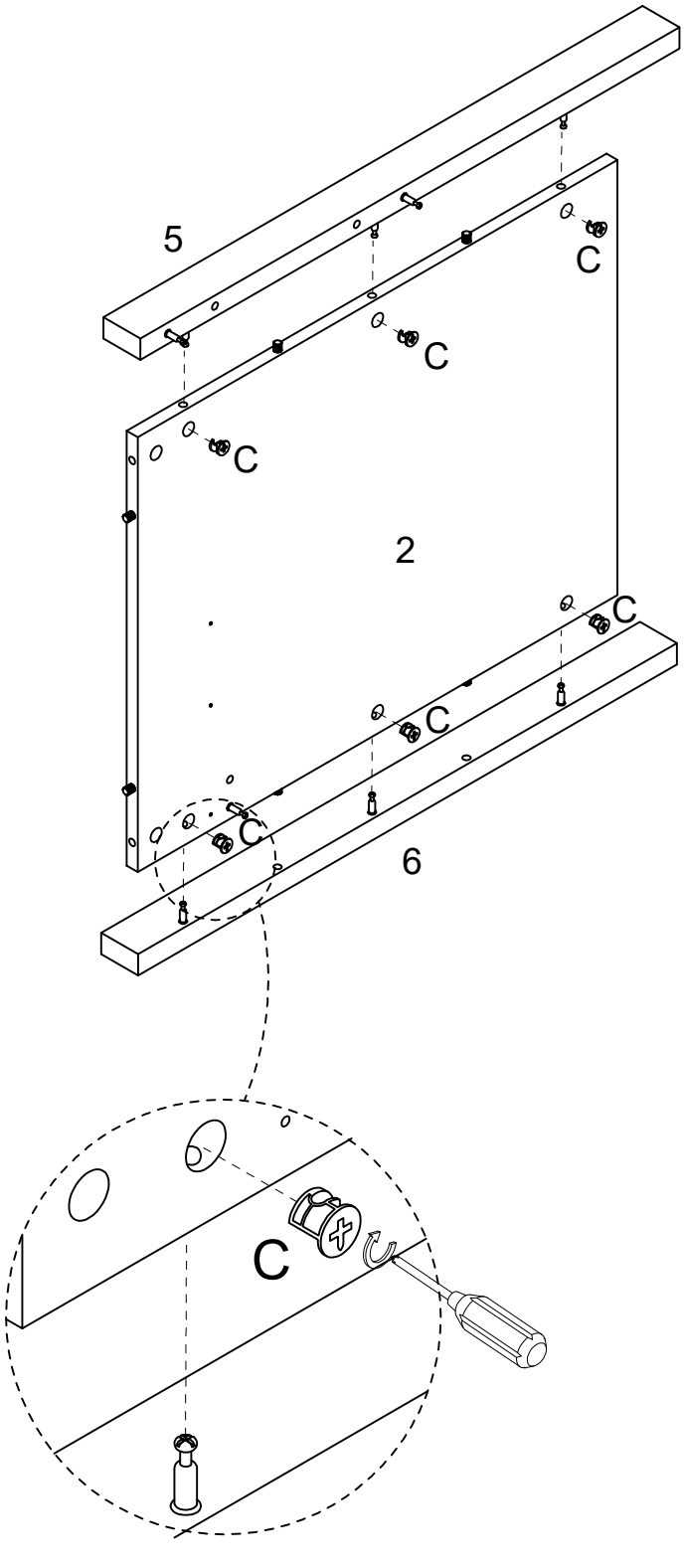

C
X6

Step 6

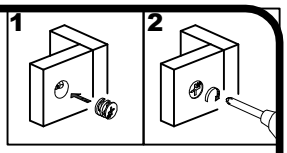

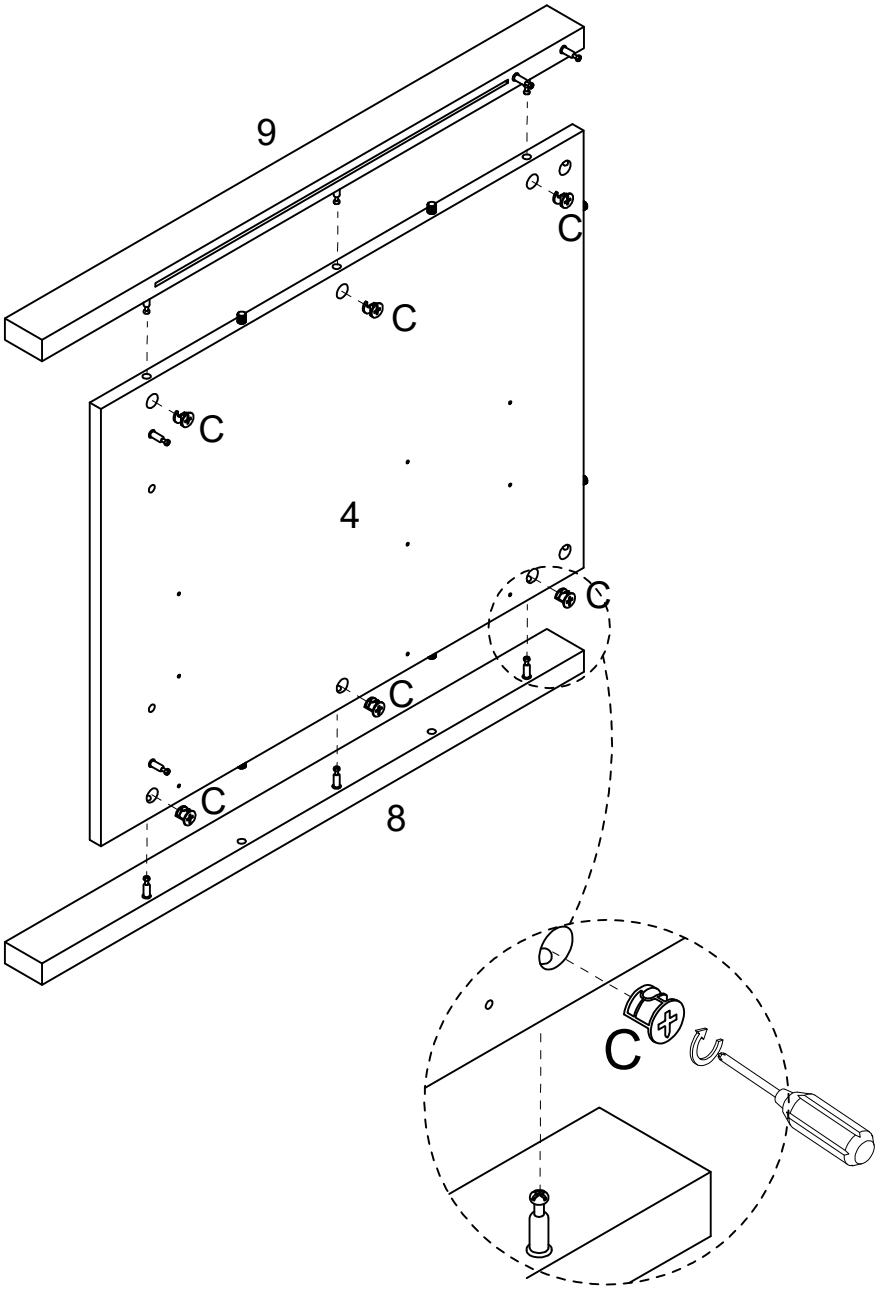

C
X6

Step 7

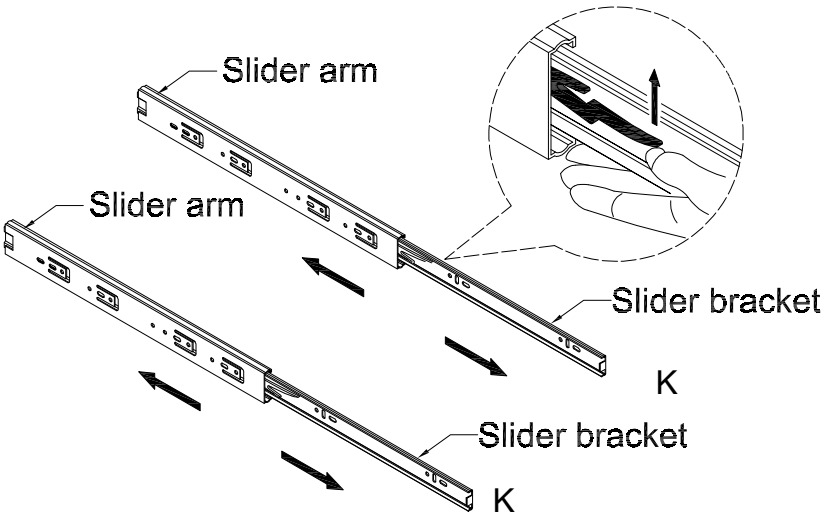

Put slider bracket into slider arm as per diagram.

Step 8

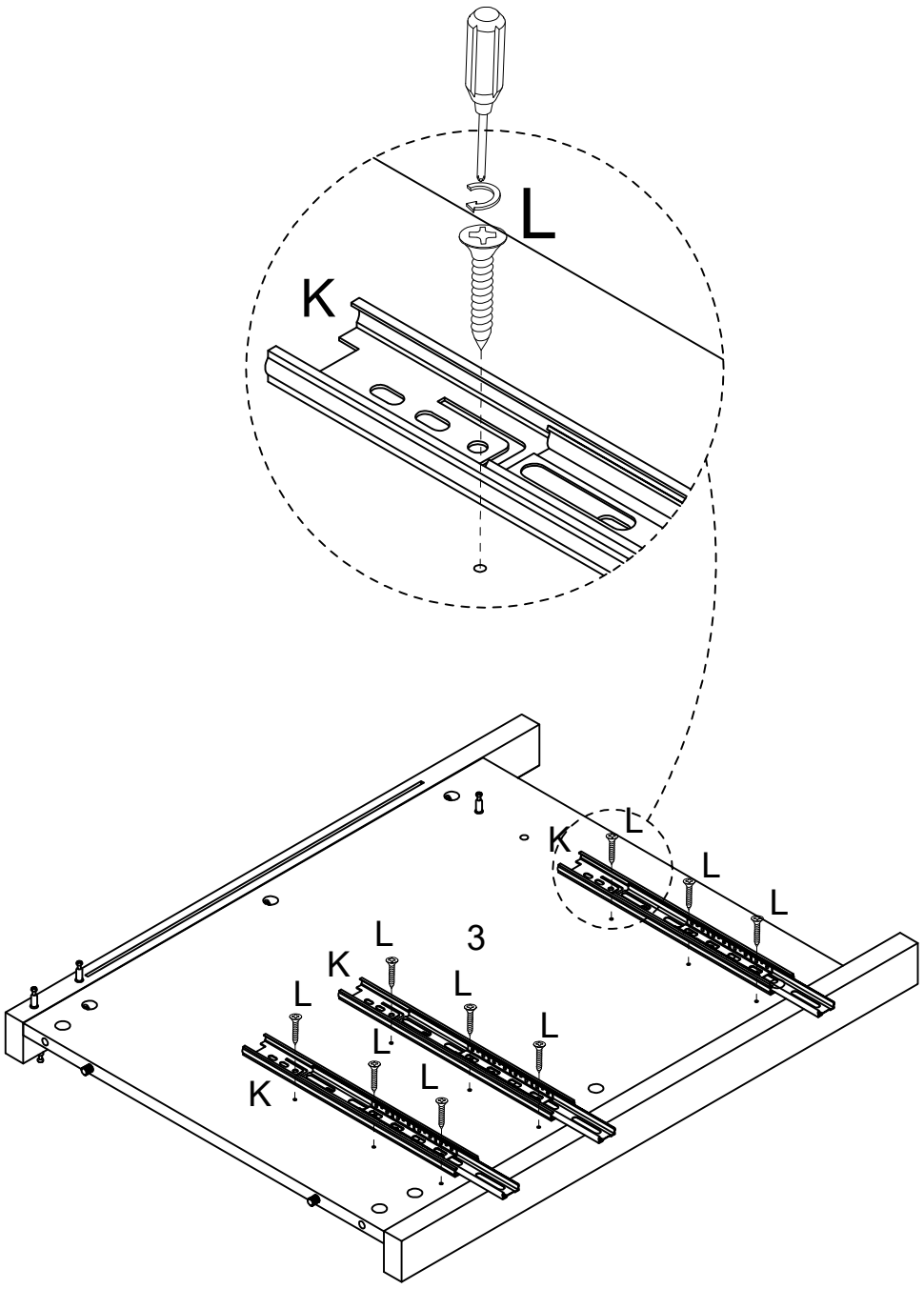

L	K
	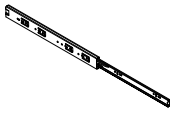
X9	X3

Step 9

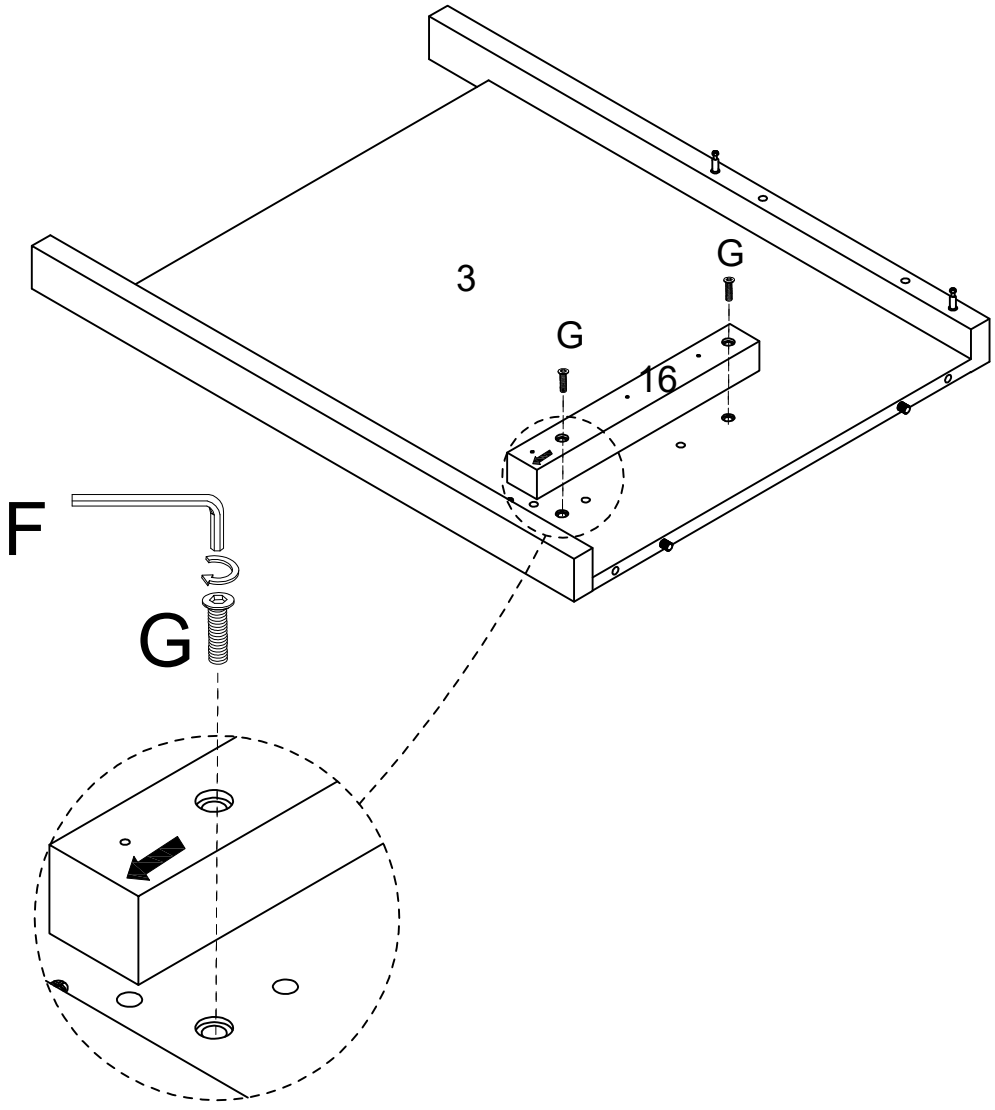

F	G
X1	X2

Step 10

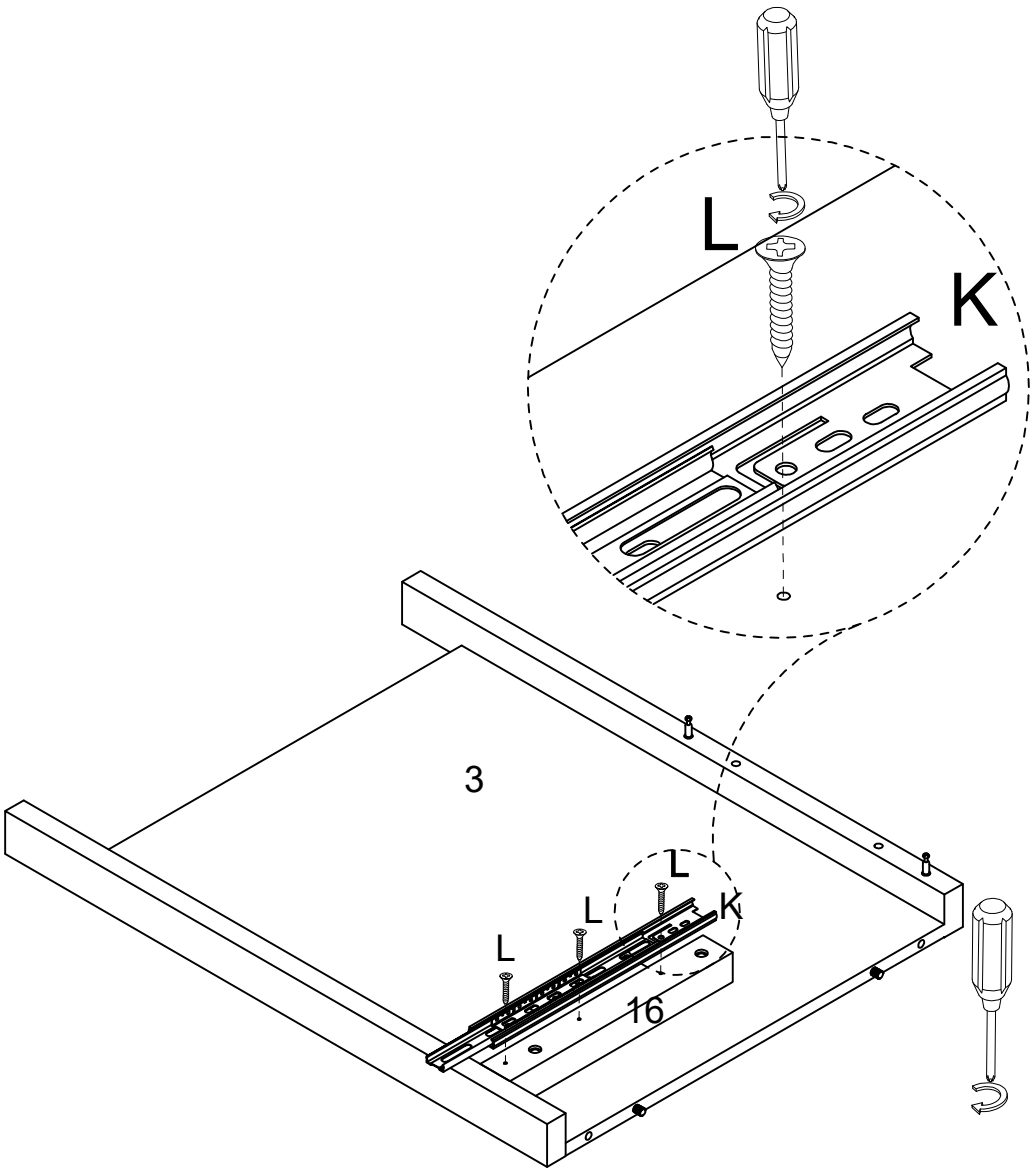

L	K
	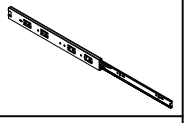
X3	X1

Step 11

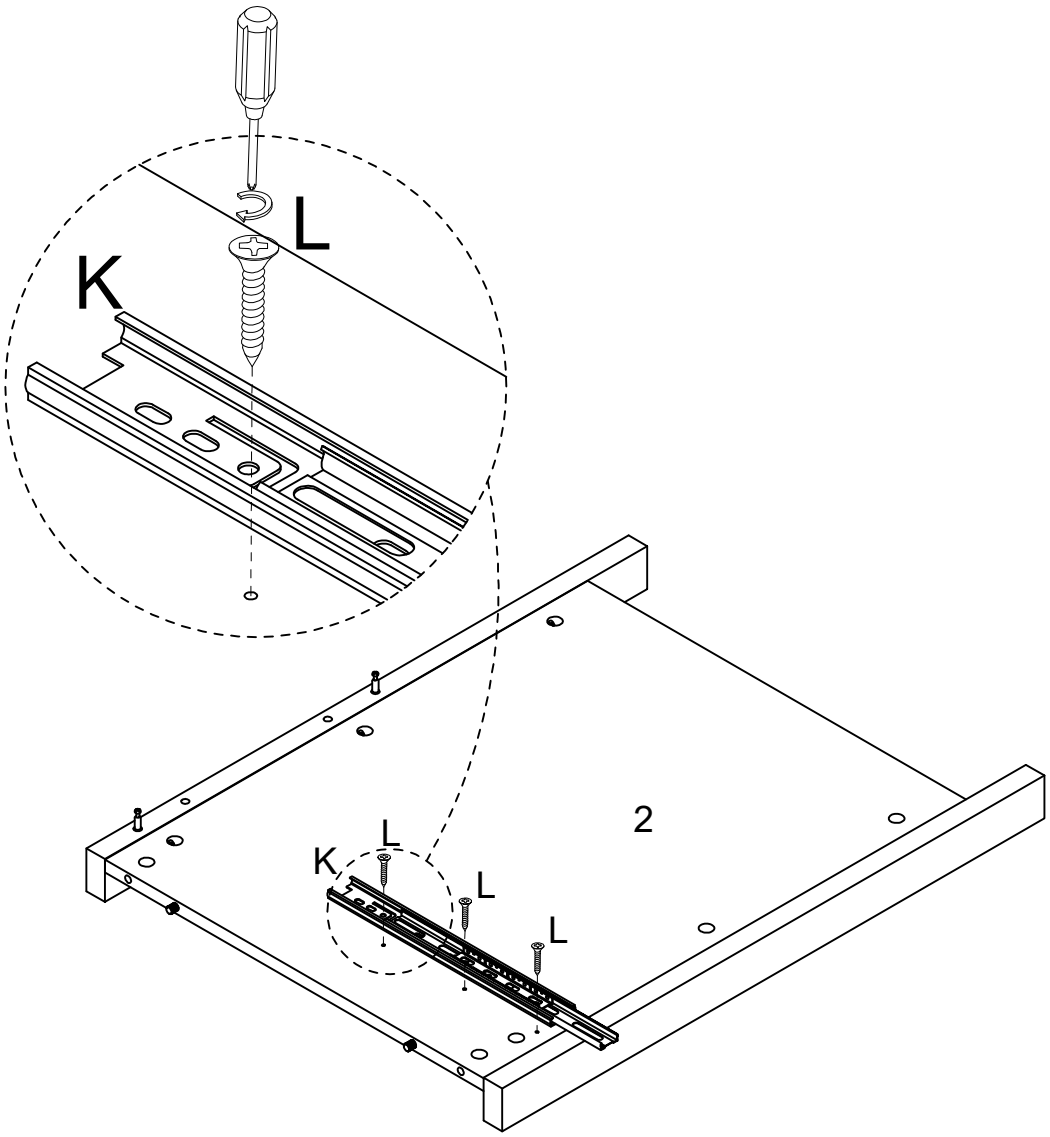

L	K
	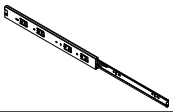
X3	X1

Step 12

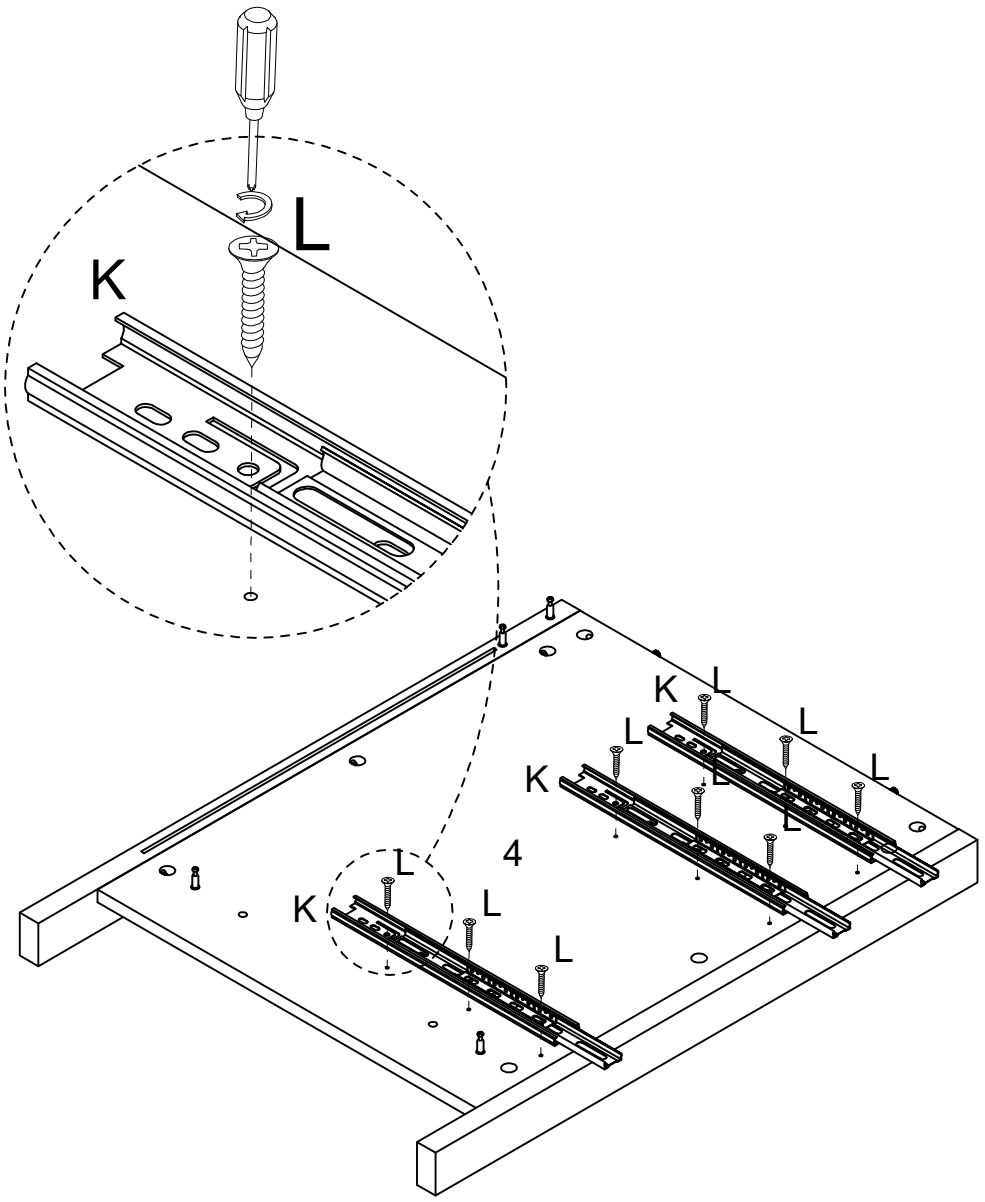

L	K
	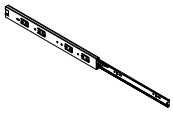
X9	X3

Step 13

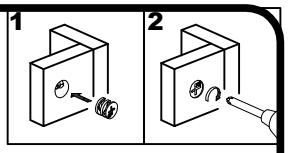

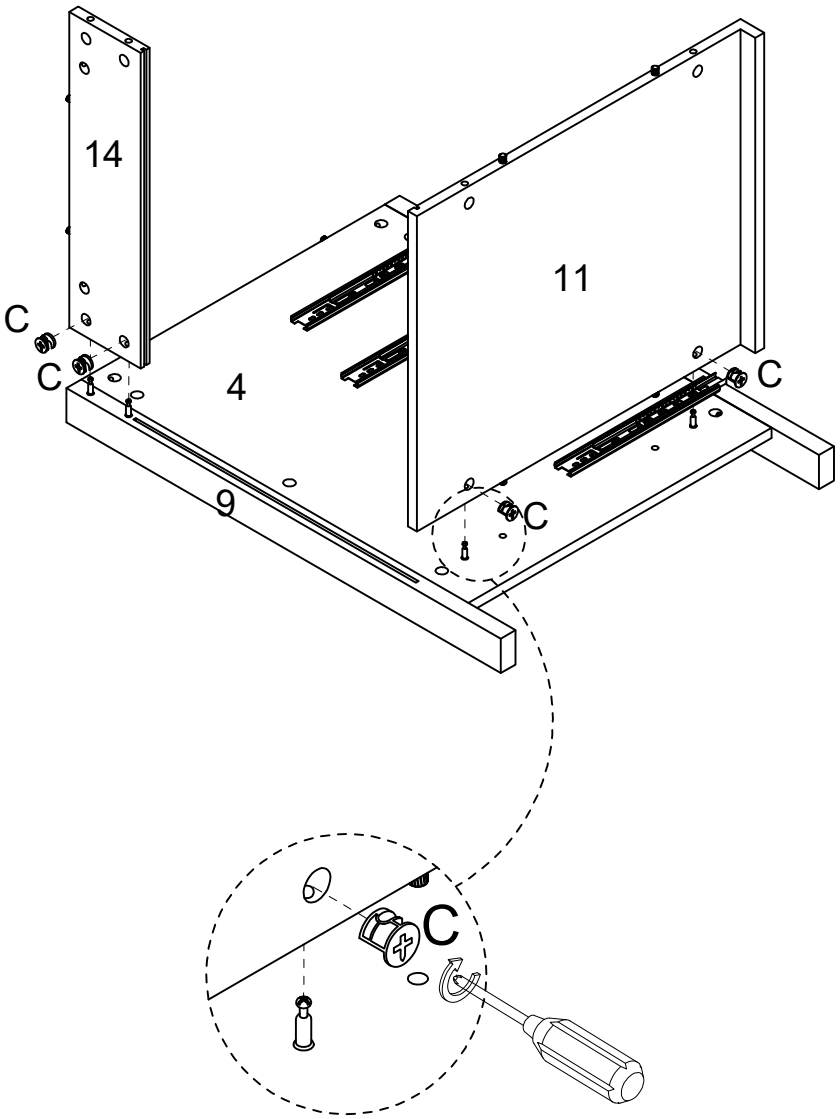

C
X4

Step 14

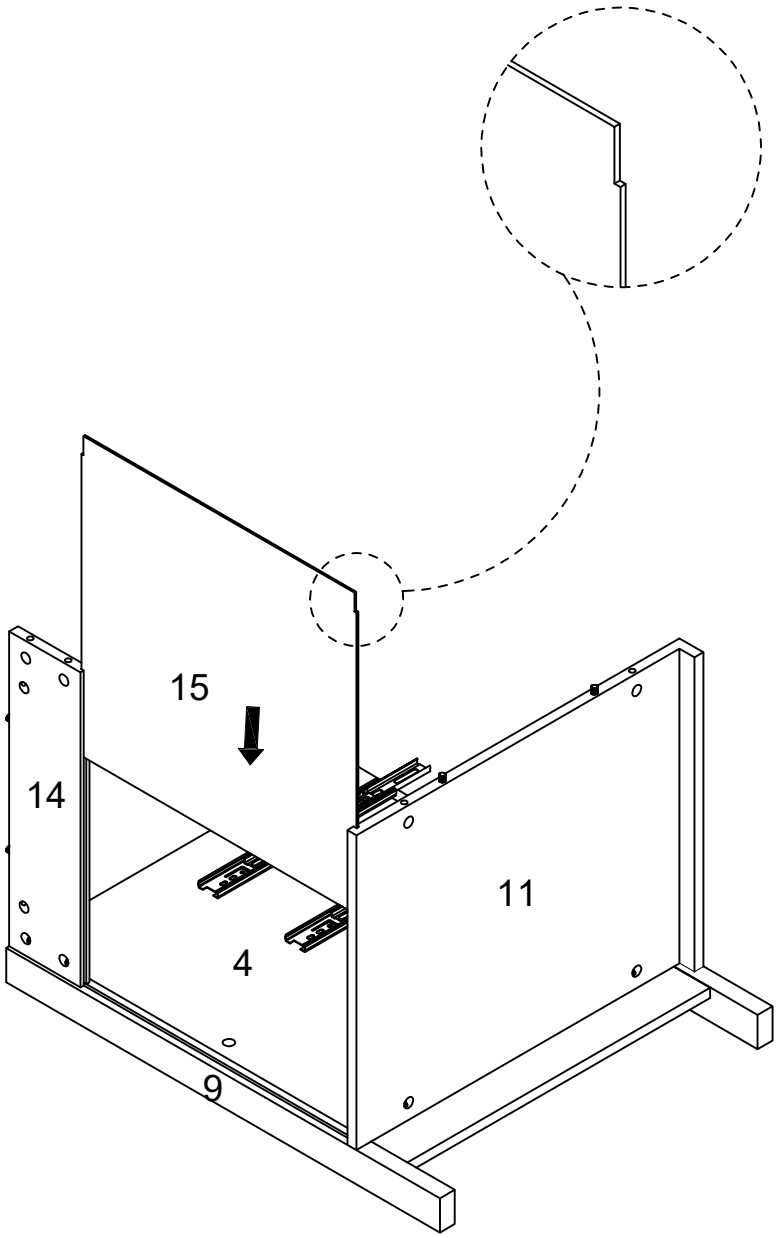

Step 15

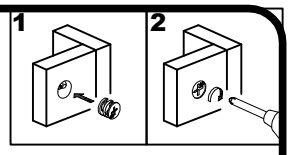

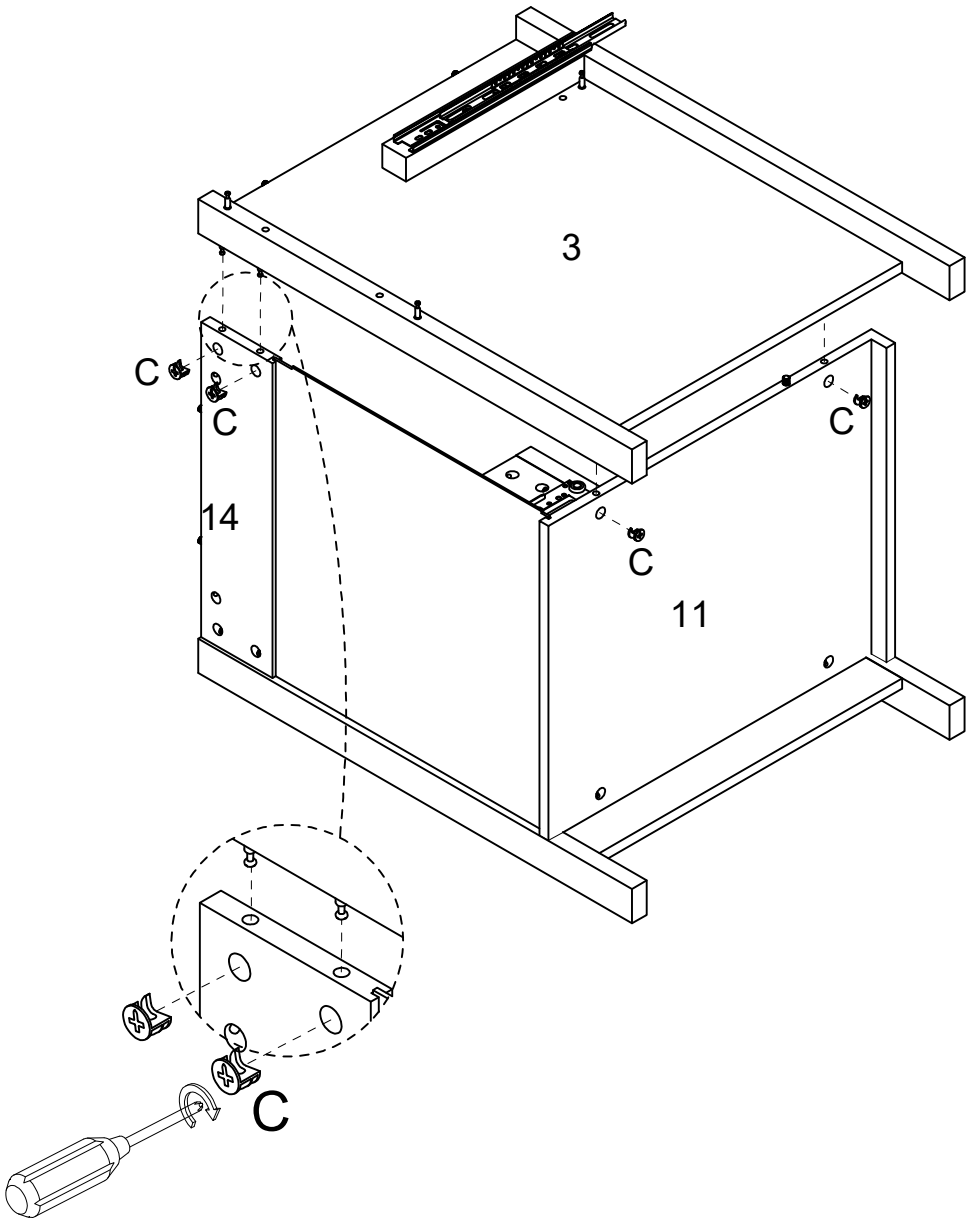

C
X4

Step 16

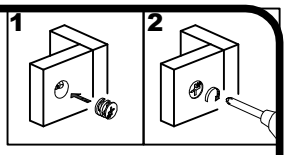

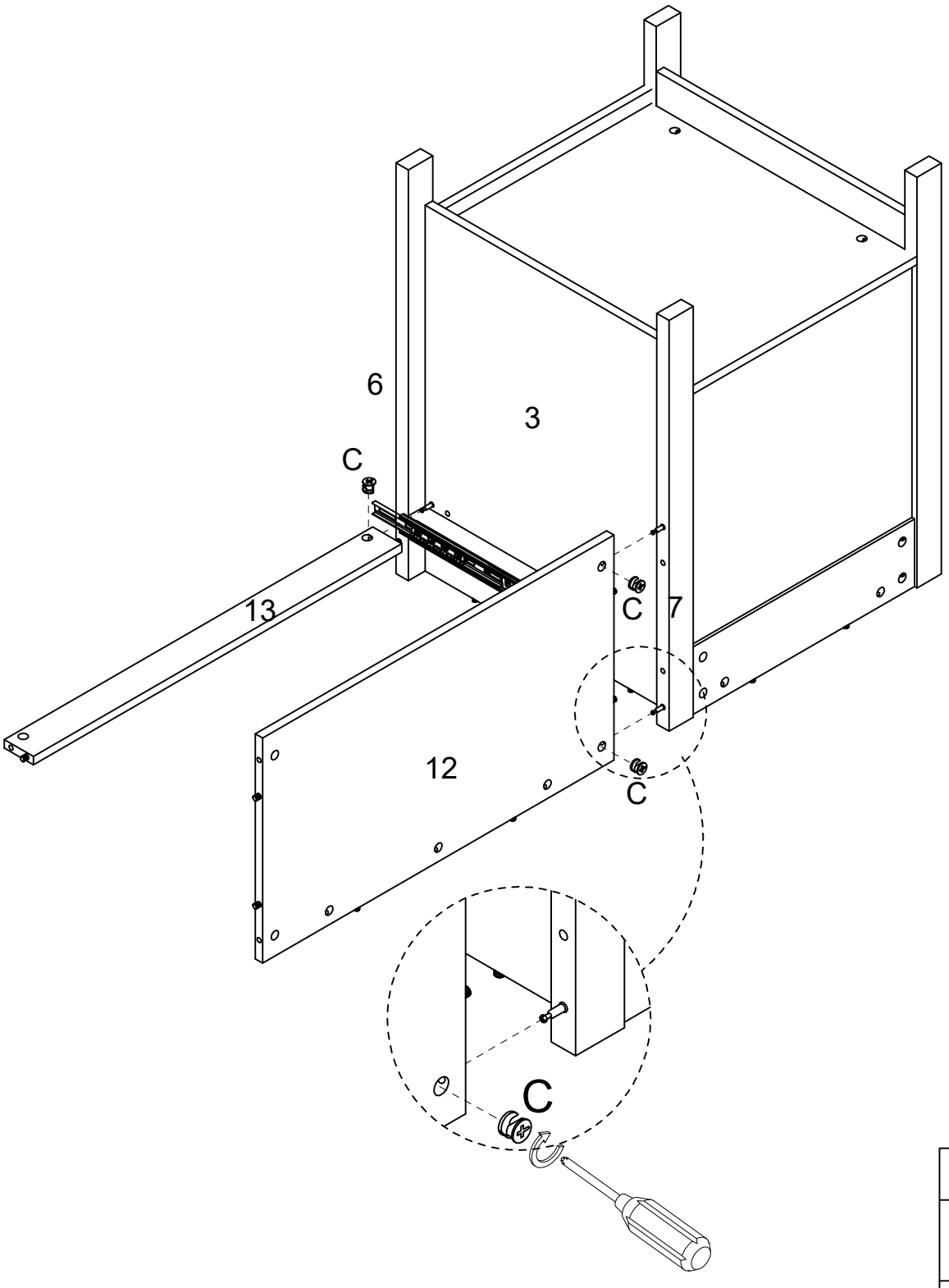

C
X3

Step 17

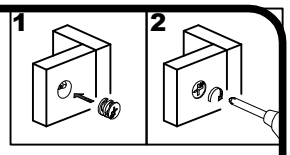

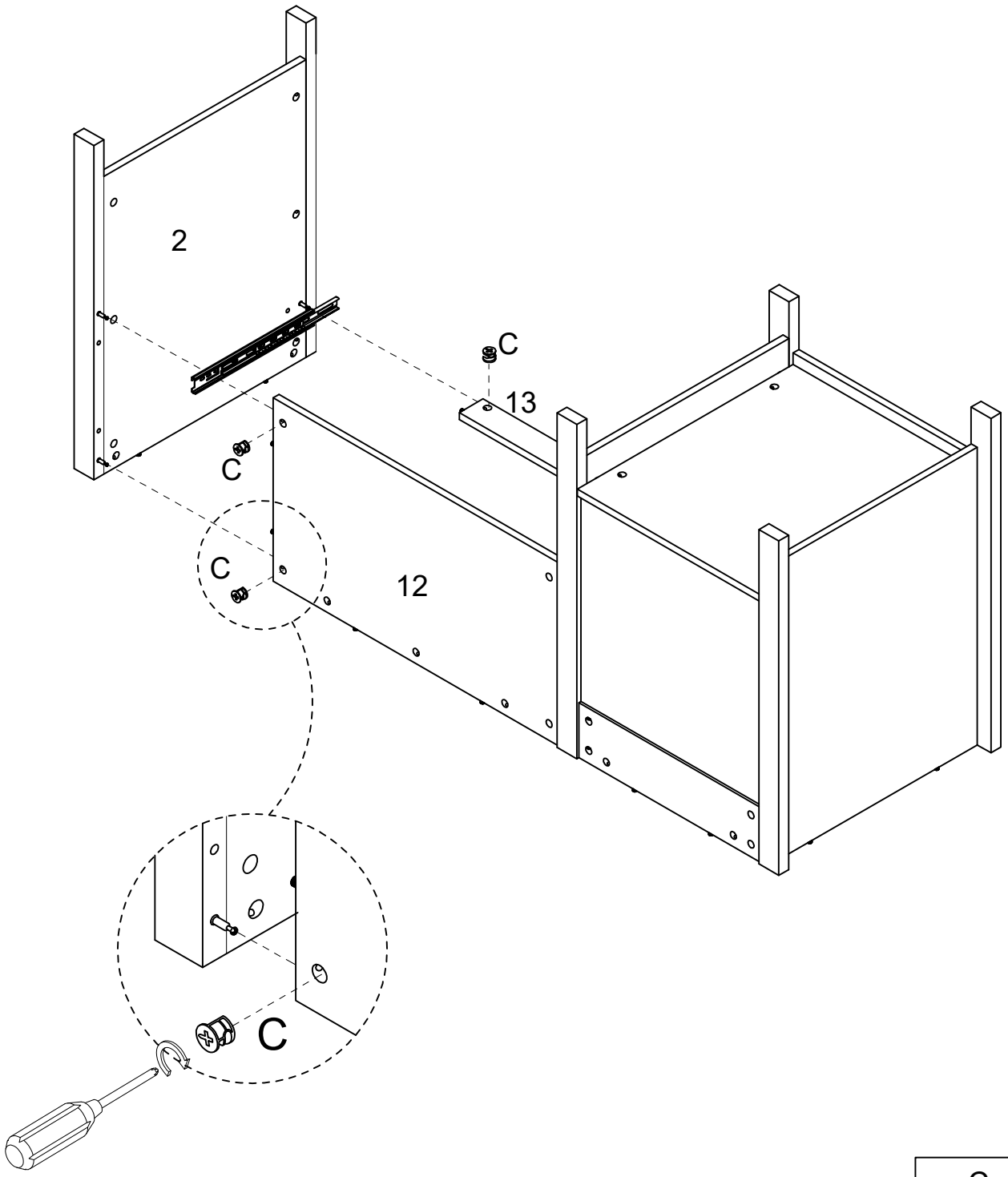

C
X3

Step 18

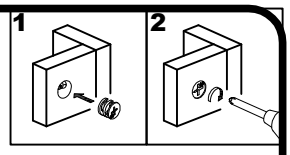

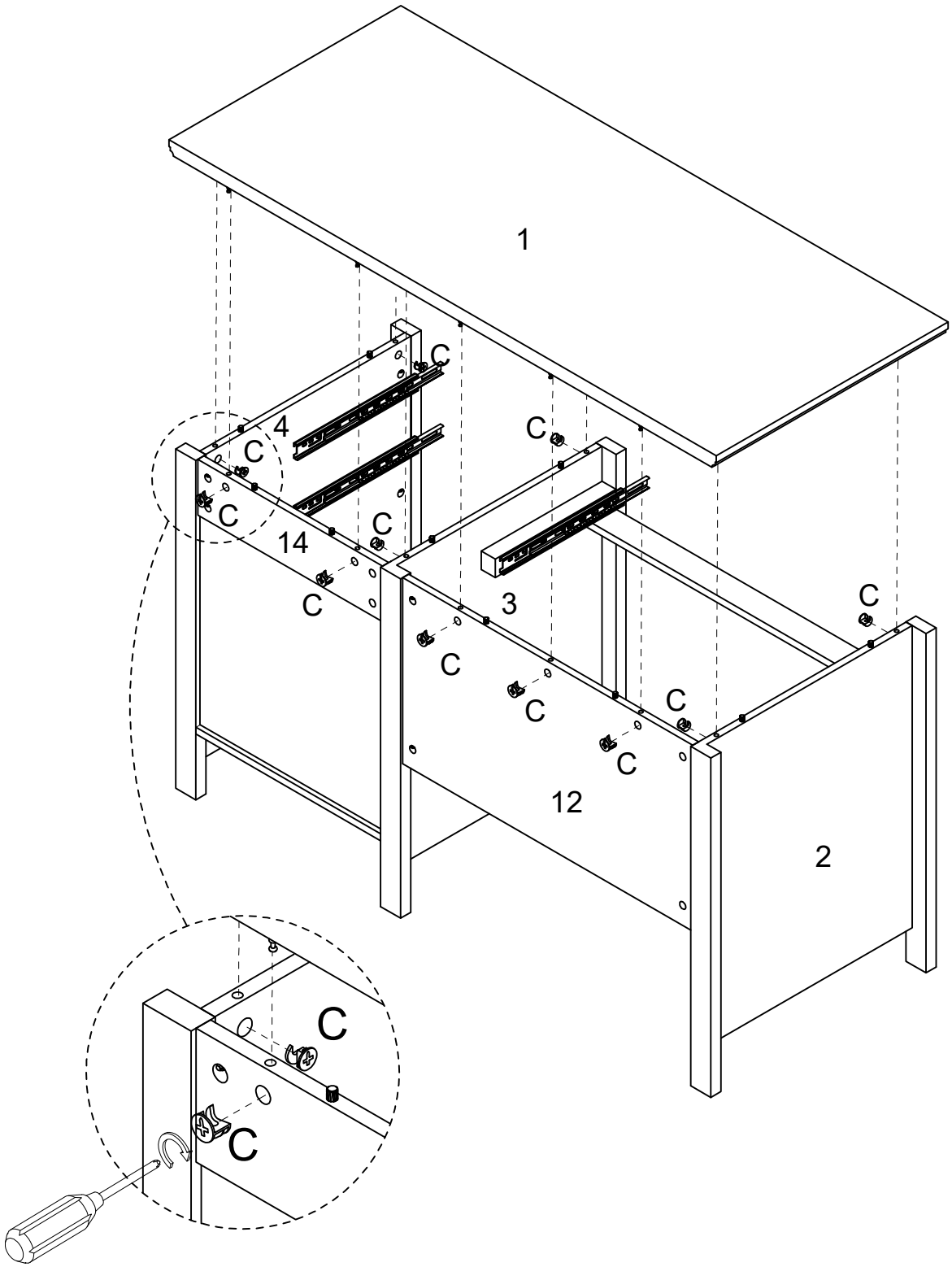

C
X11

Step 19

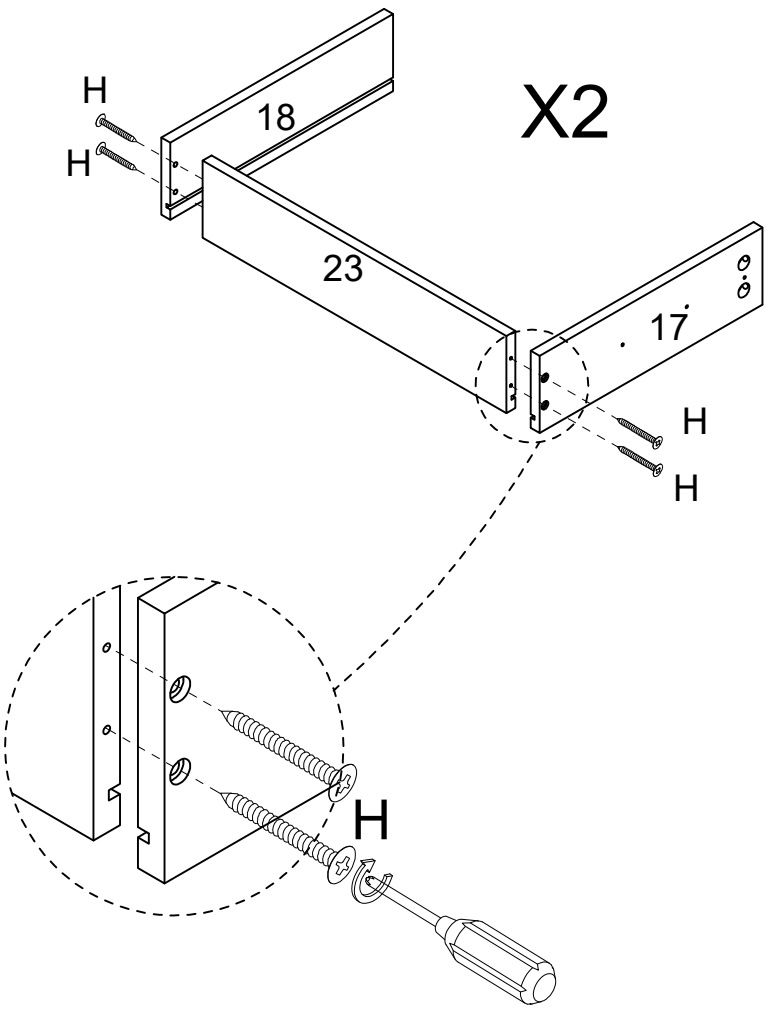

H
X8

Step 20

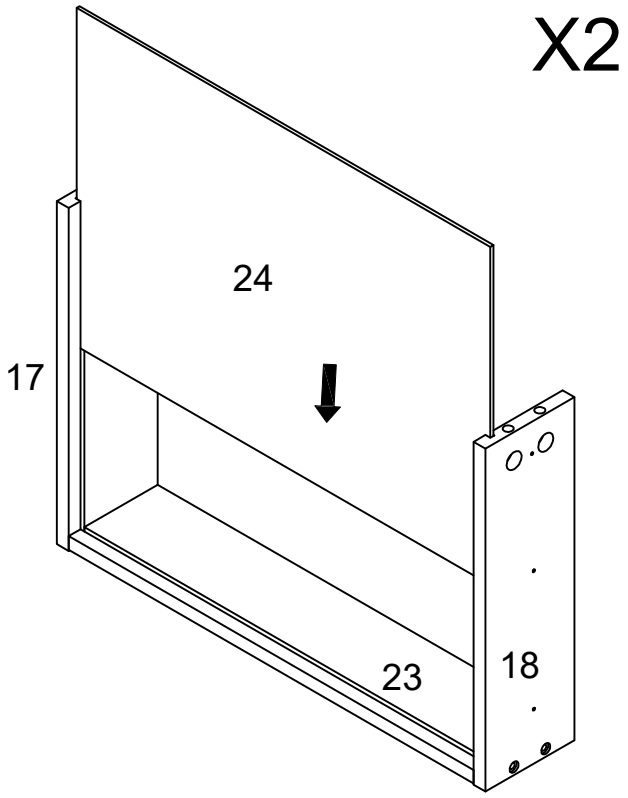

Step 21

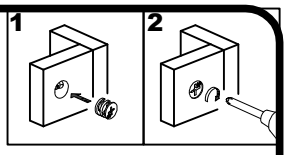

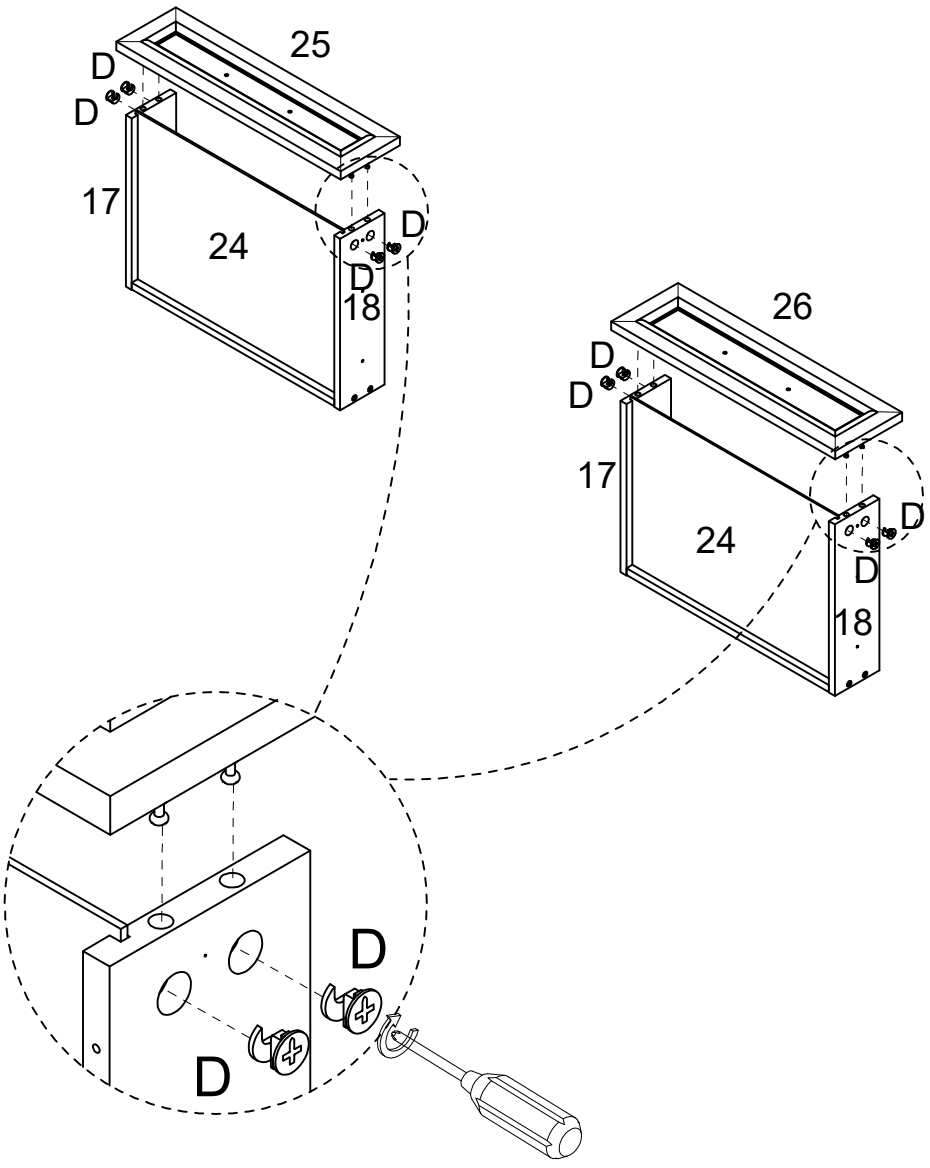

D
X8

Step 22

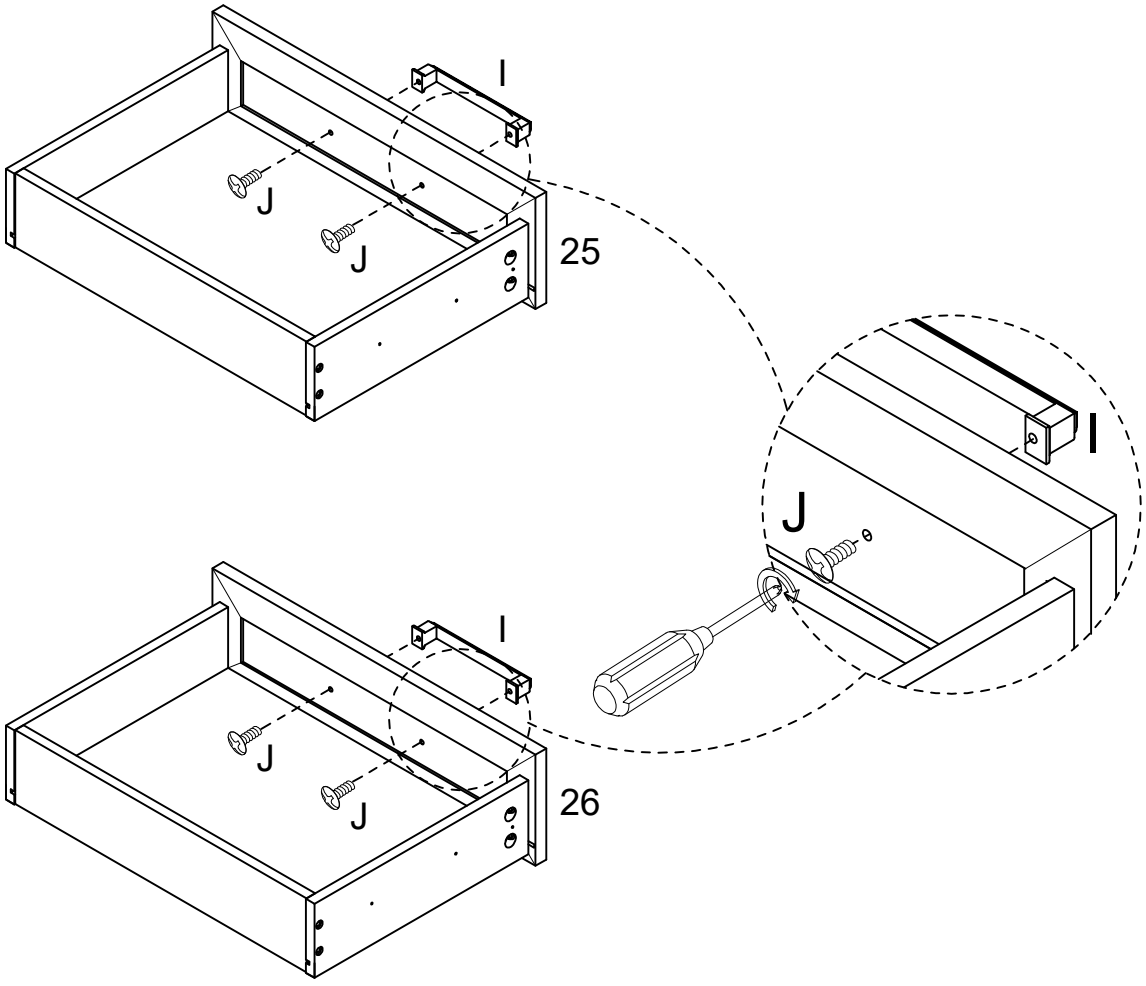

J	I
X4	X2

Step 23

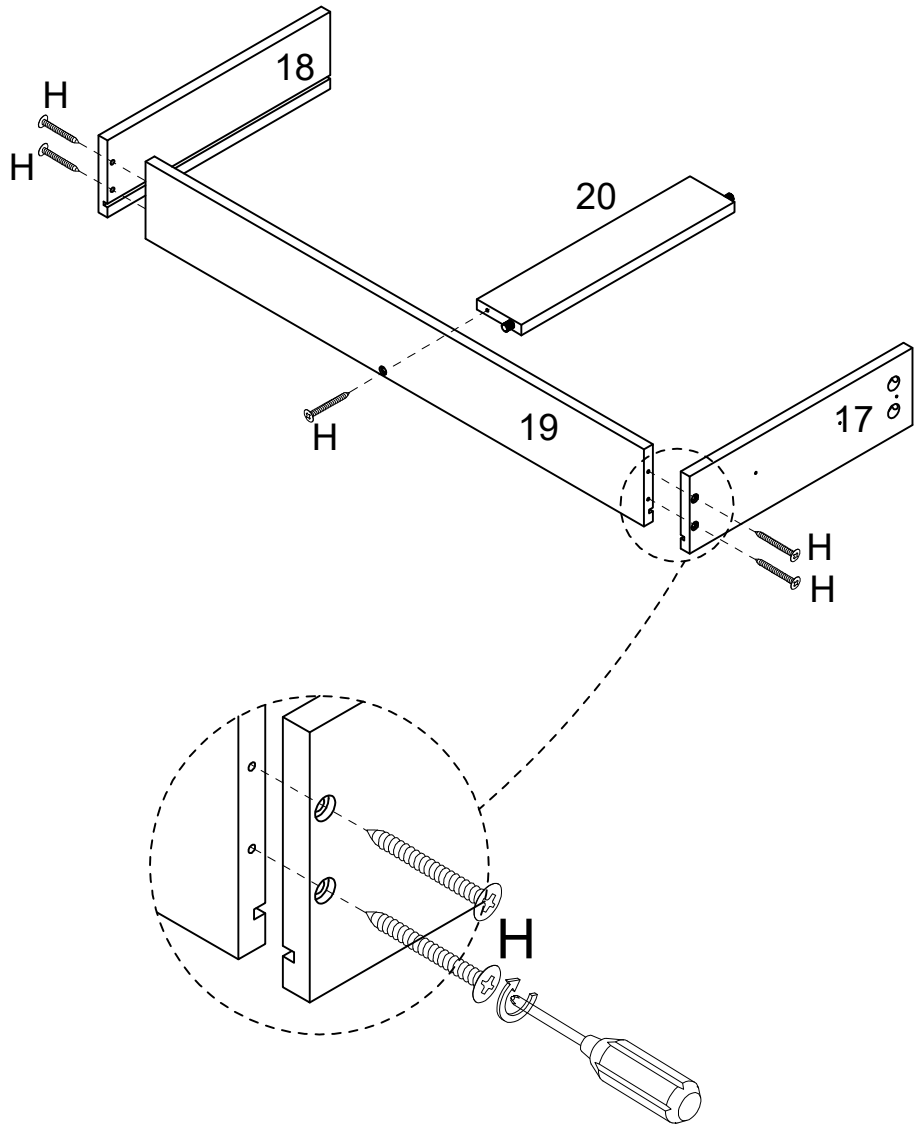

H
X5

Step 24

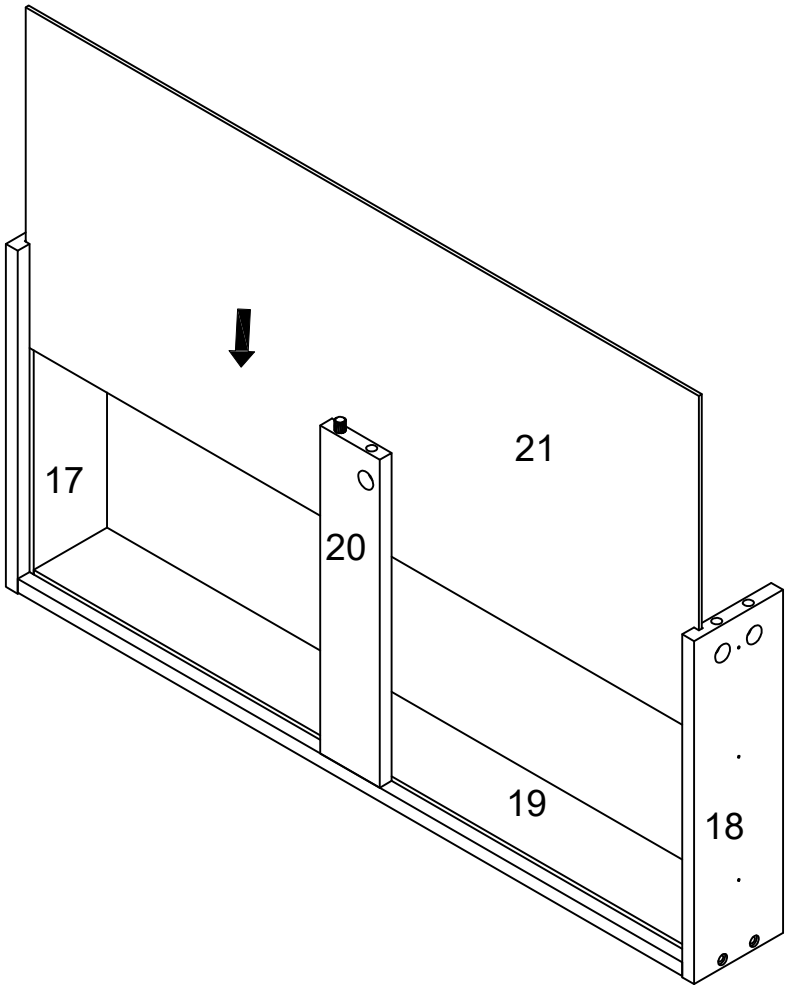

Step 25

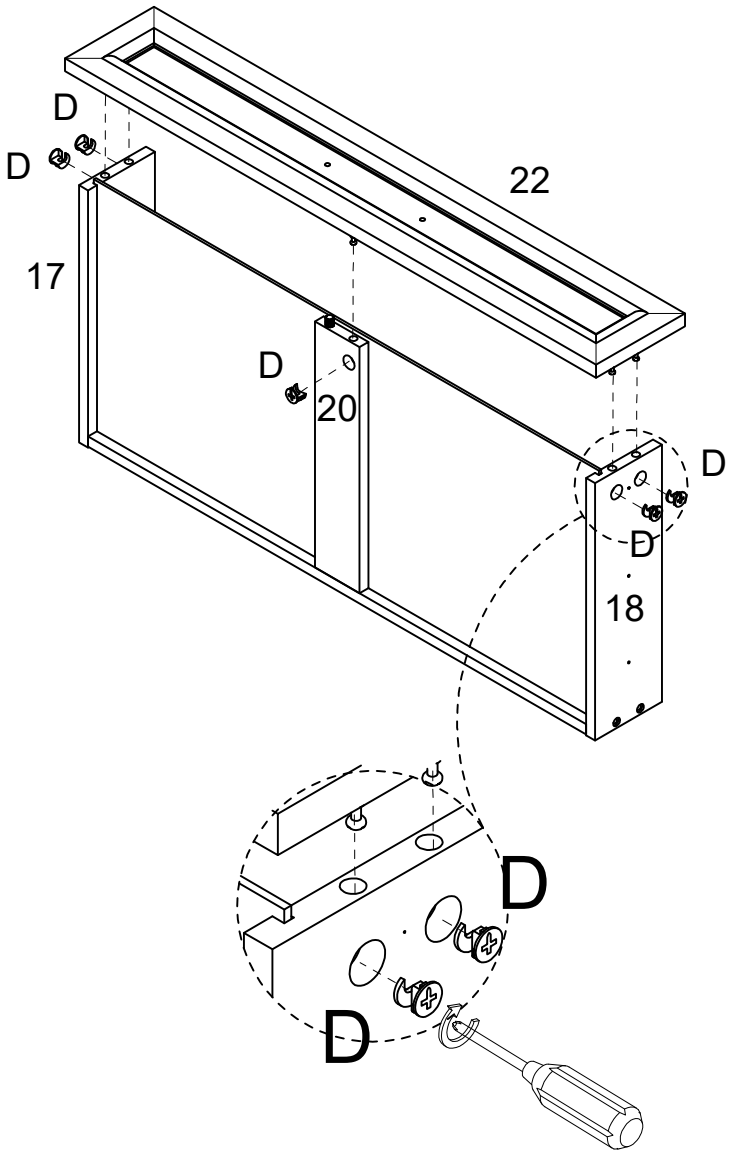

D
X5

Step 26

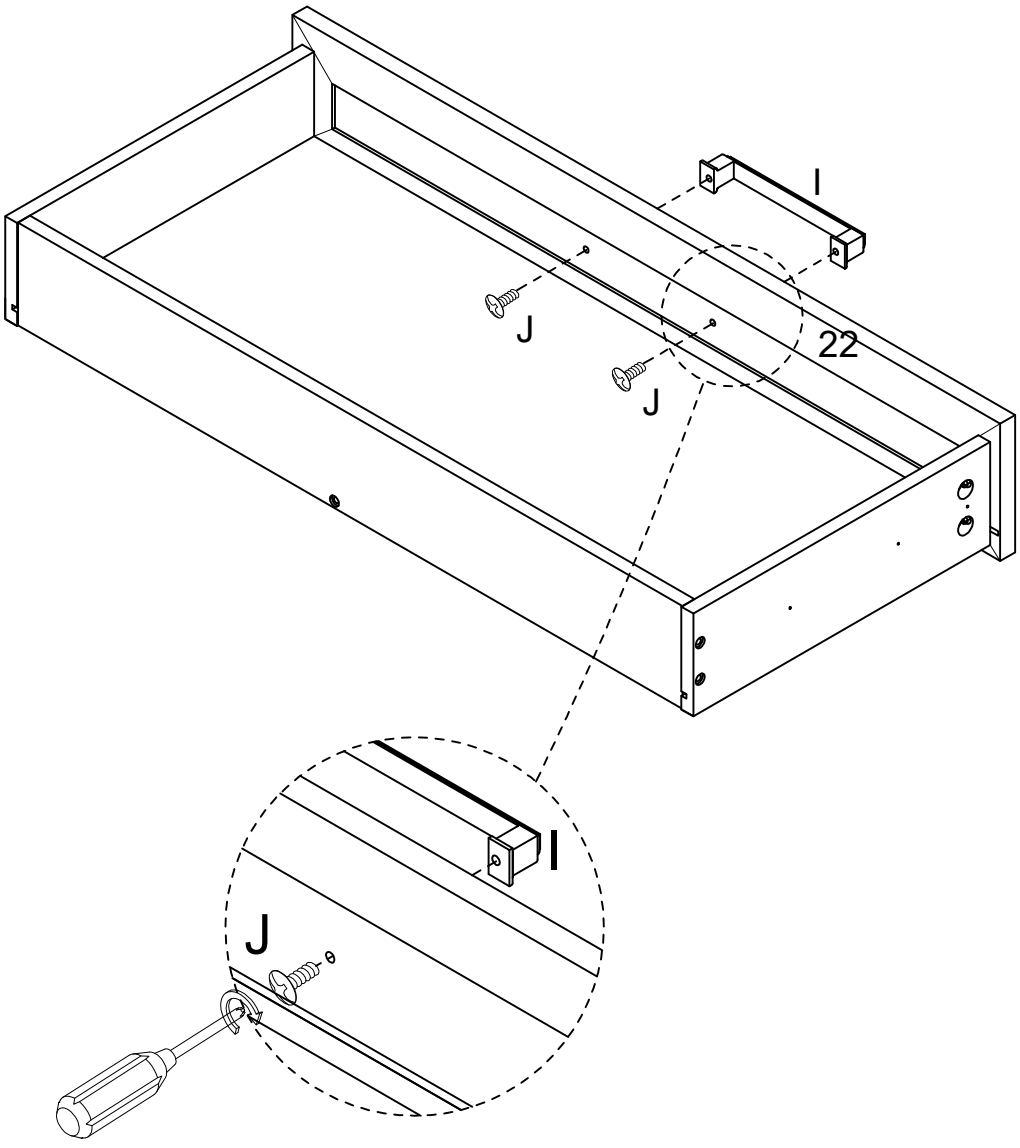

J	I
X2	X1

Step 27

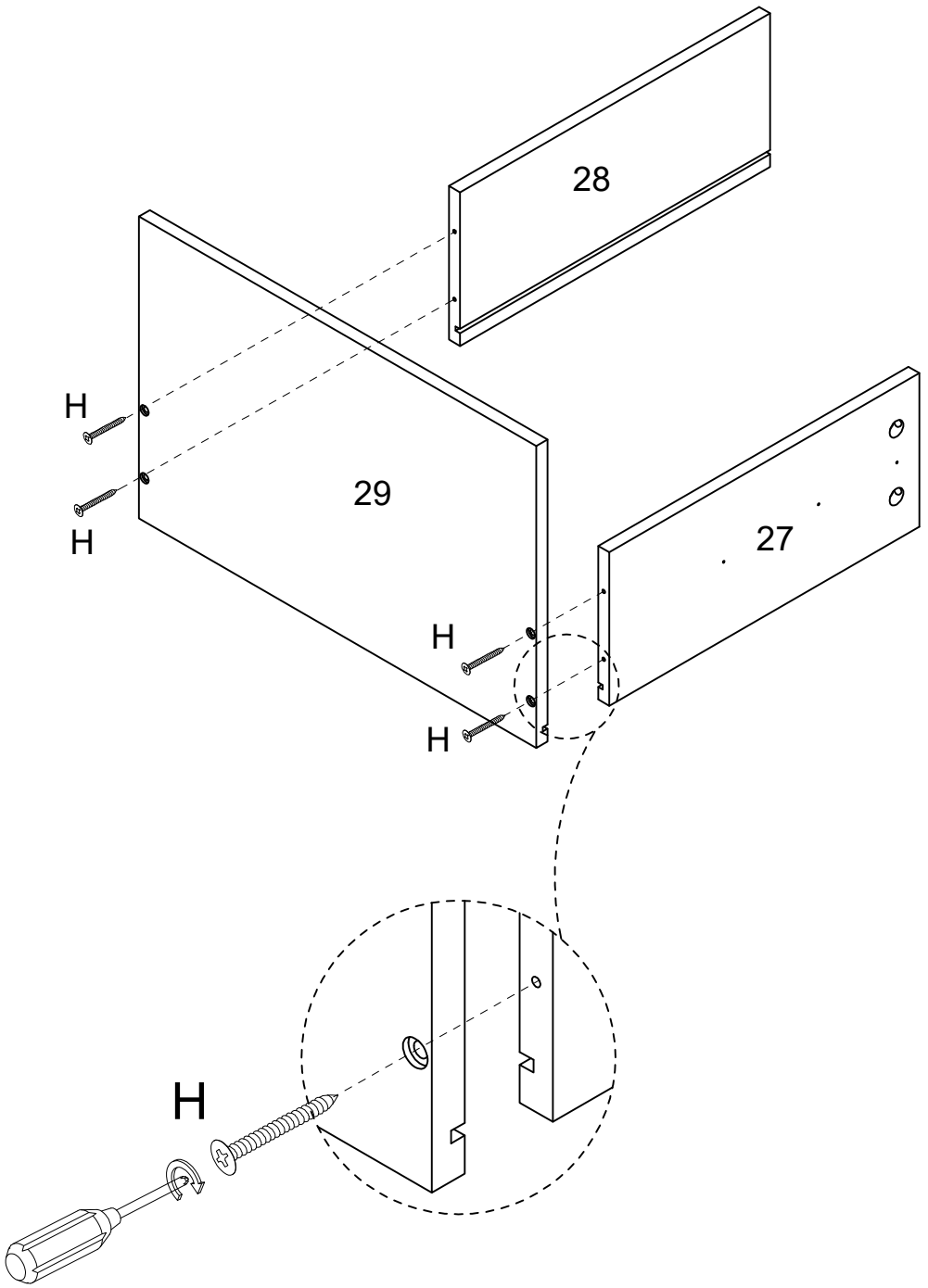

H
X4

Step 28

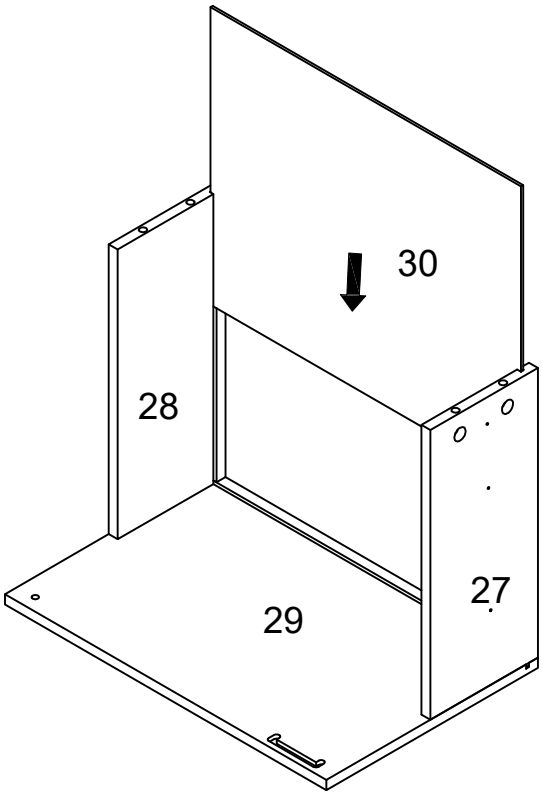

Step 29

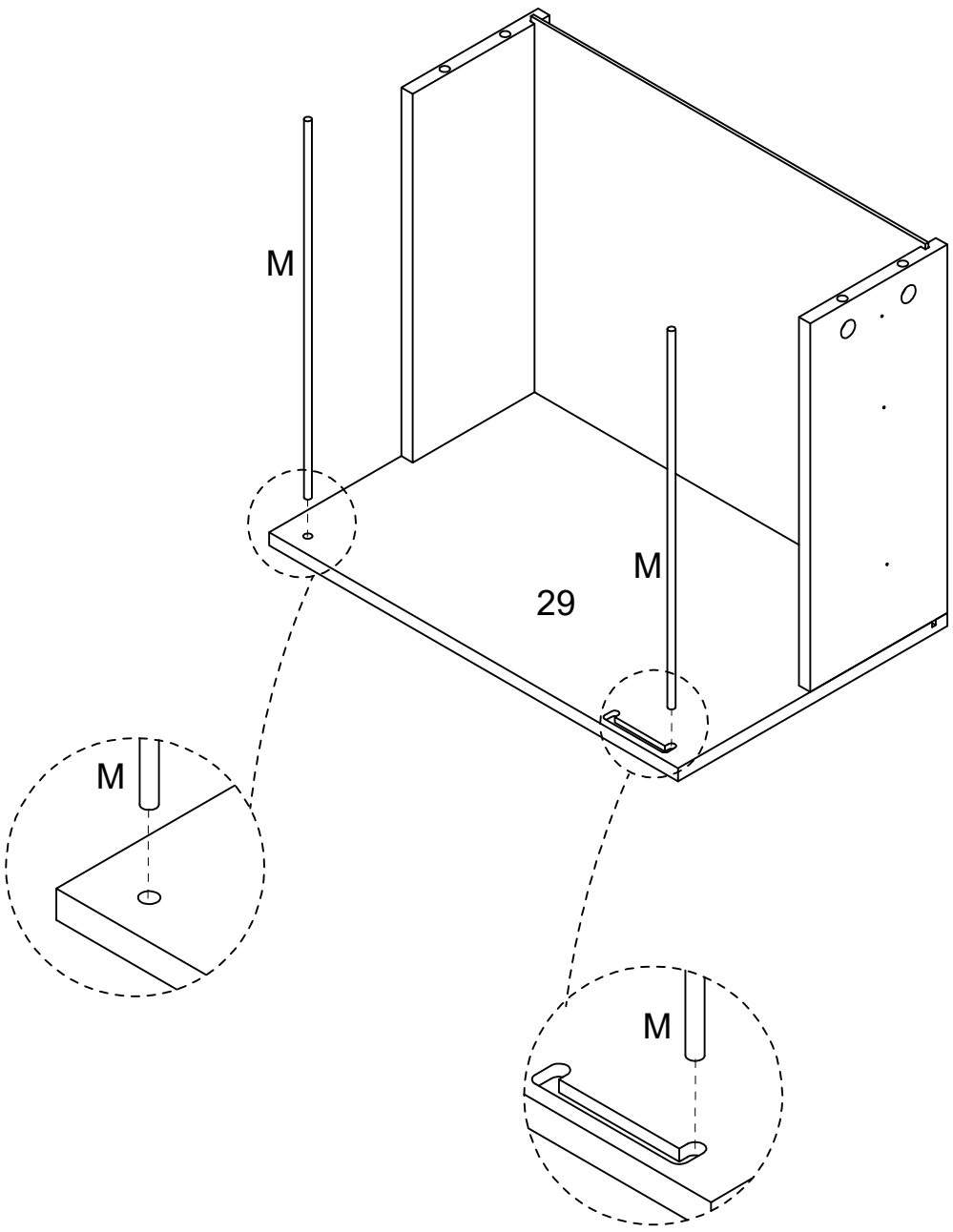

M
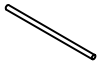
X2

Step 30

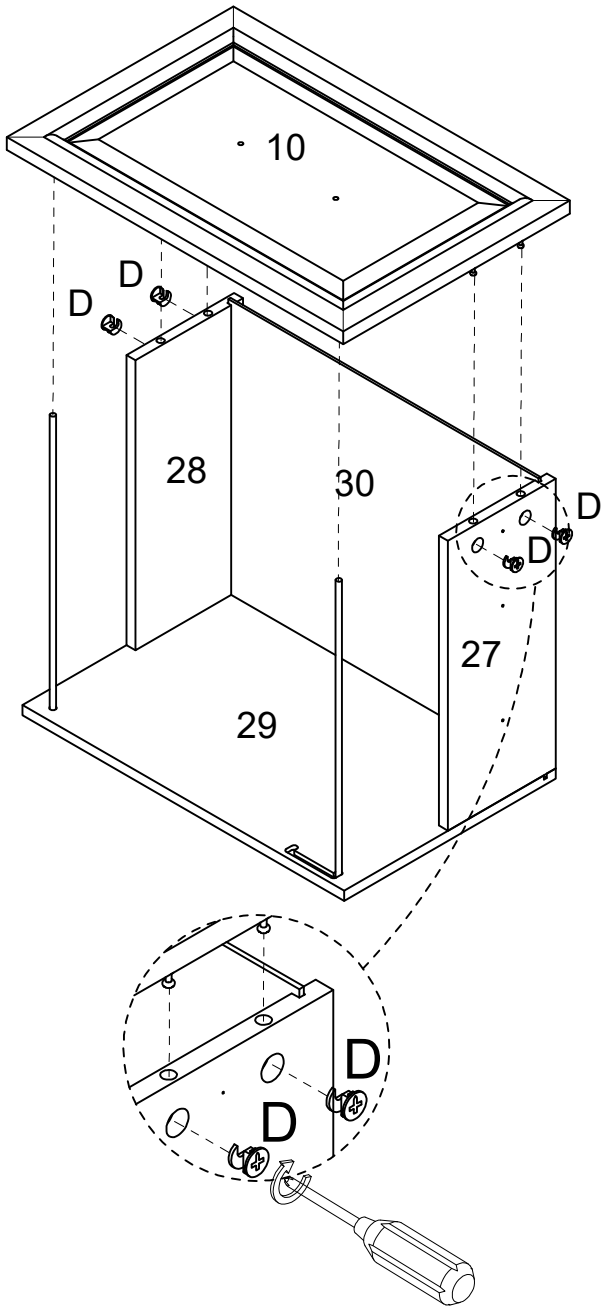

D
X4

Step 31

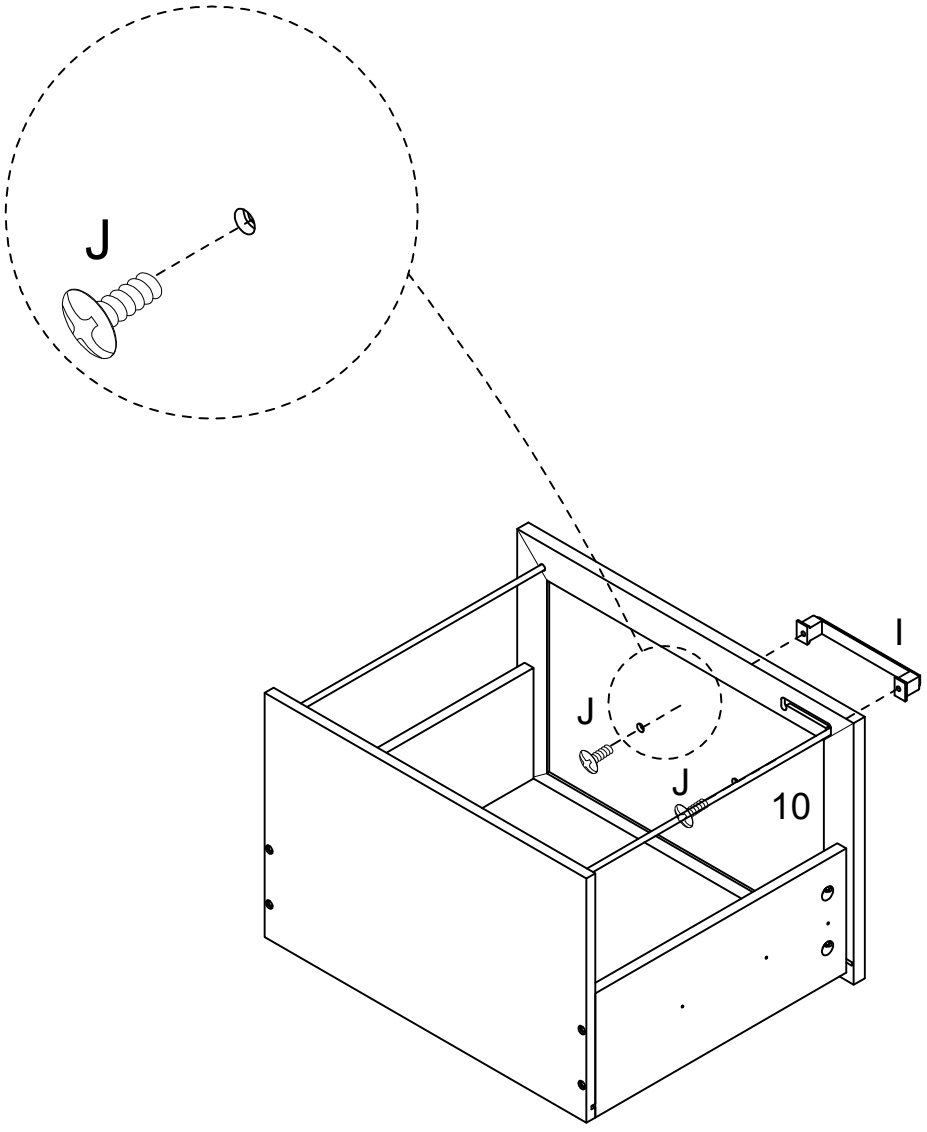

J	I
X2	X1

Step 32

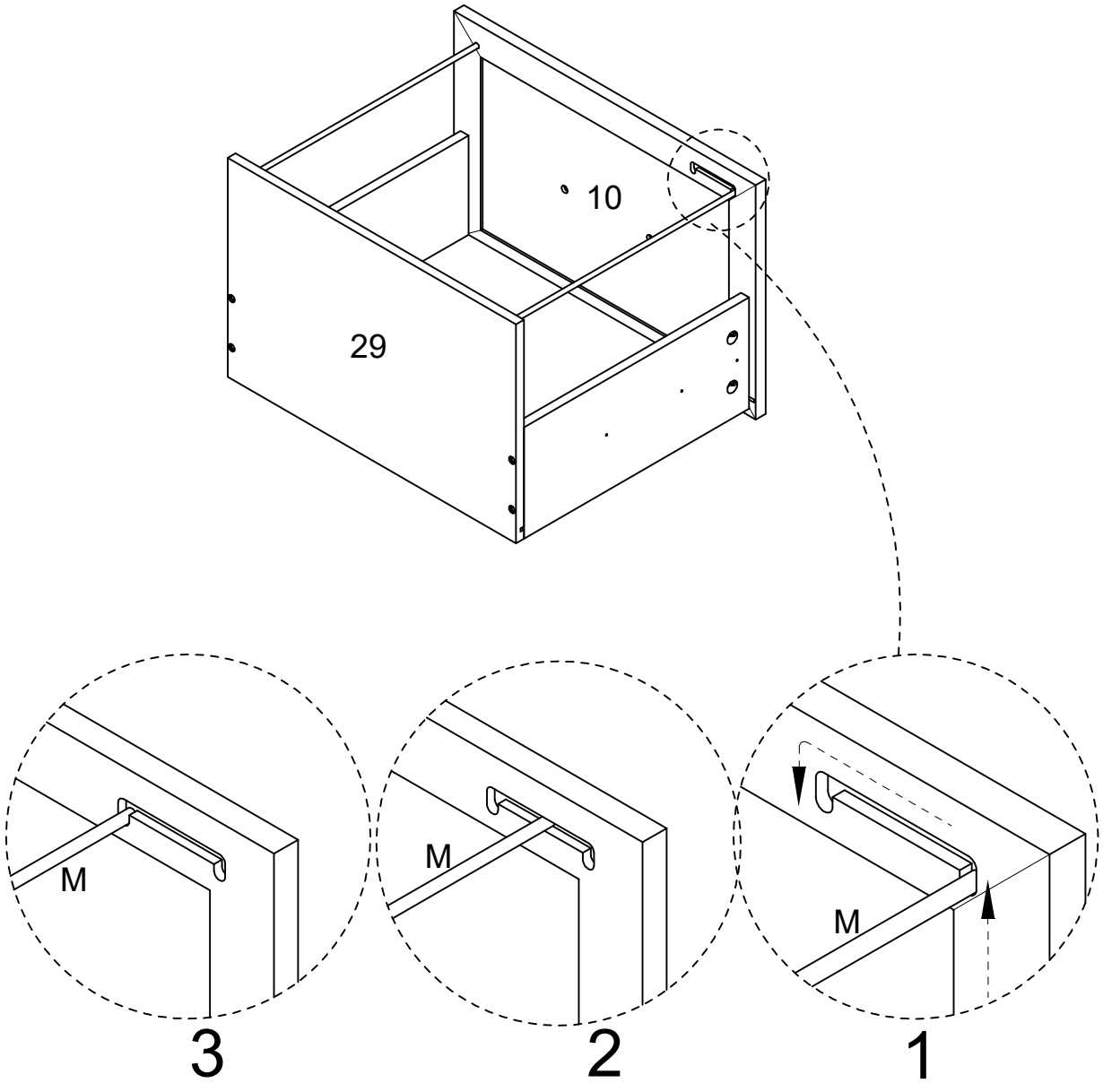

Step 33

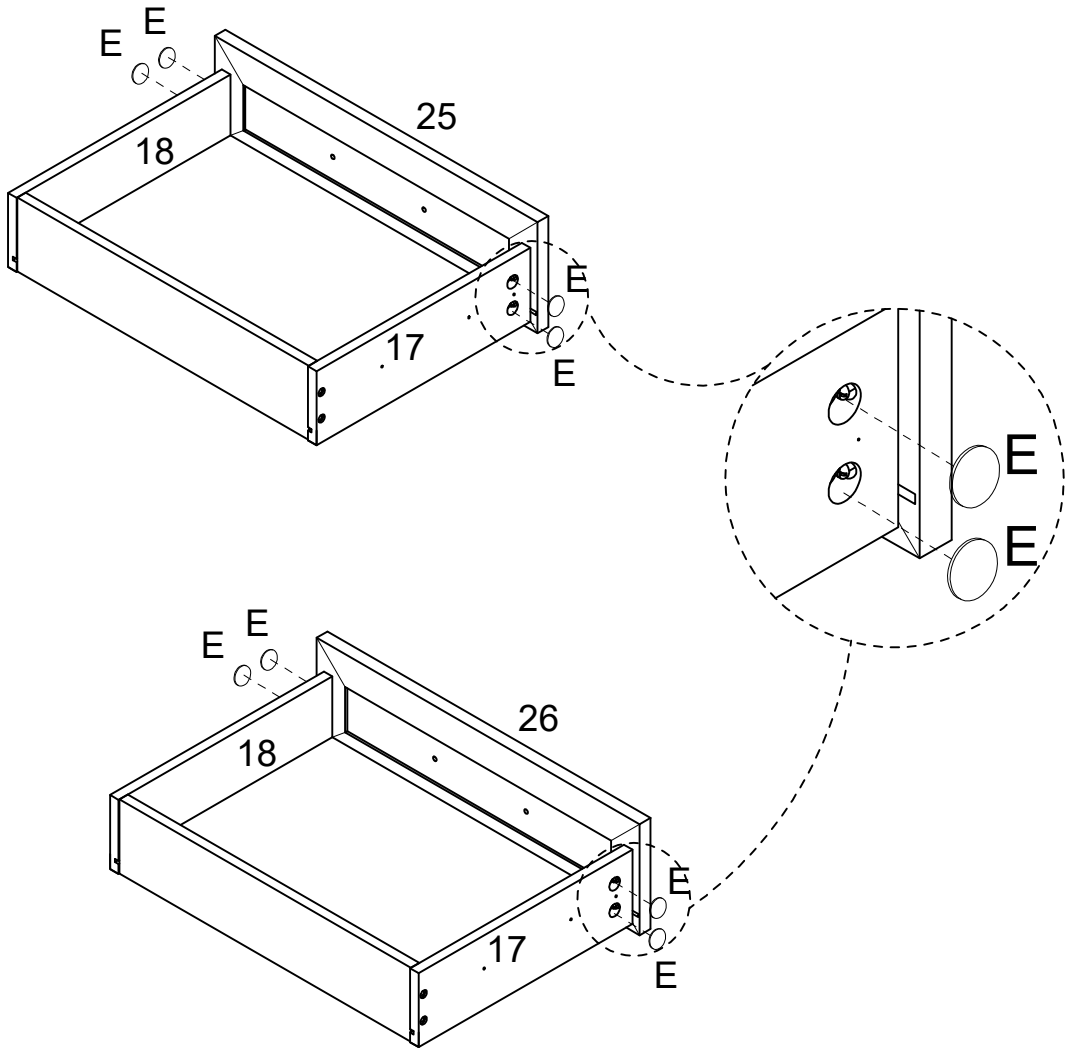

E
⬭
X8

Step 34

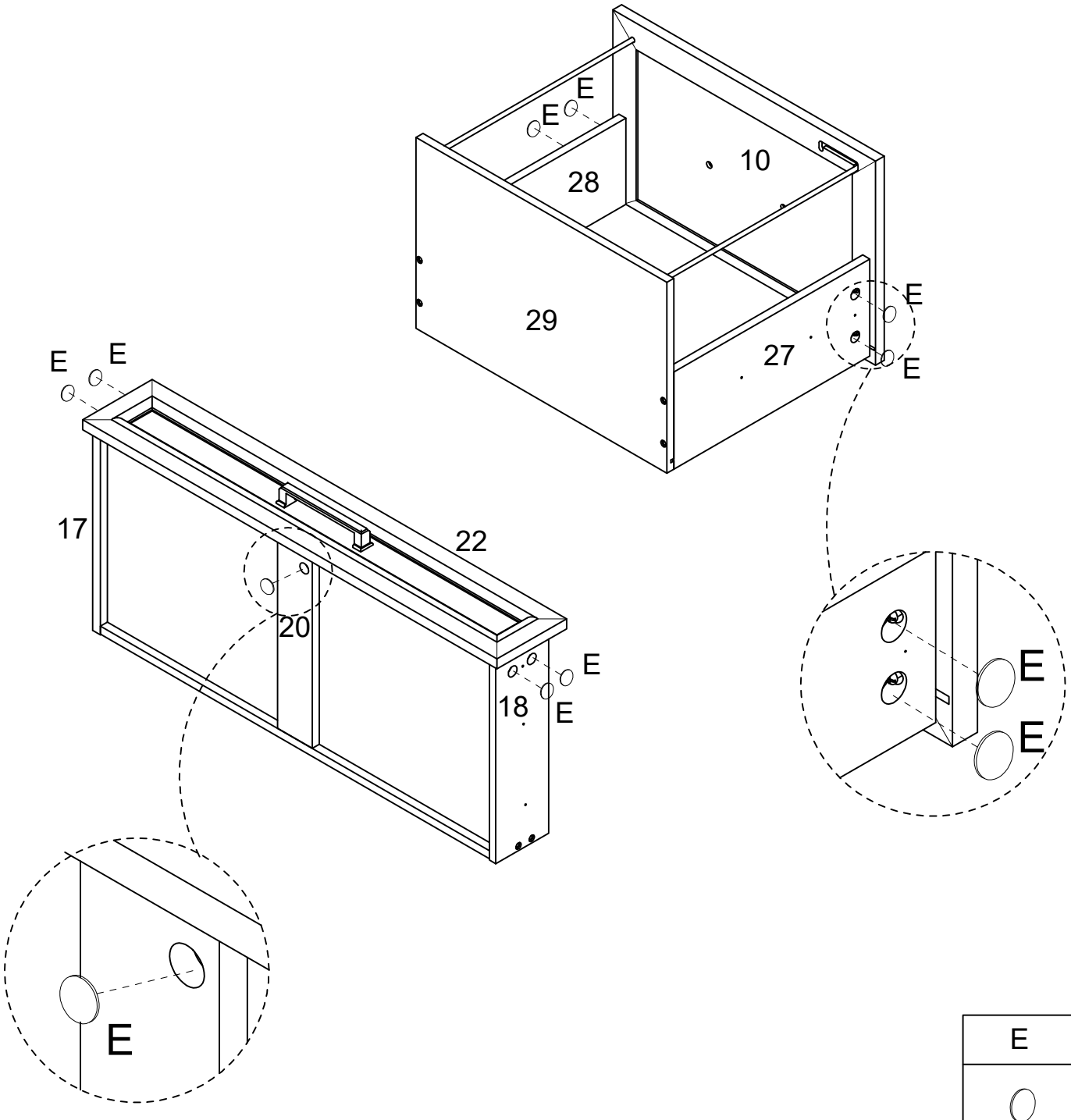

E
⬭
X9

Step 35

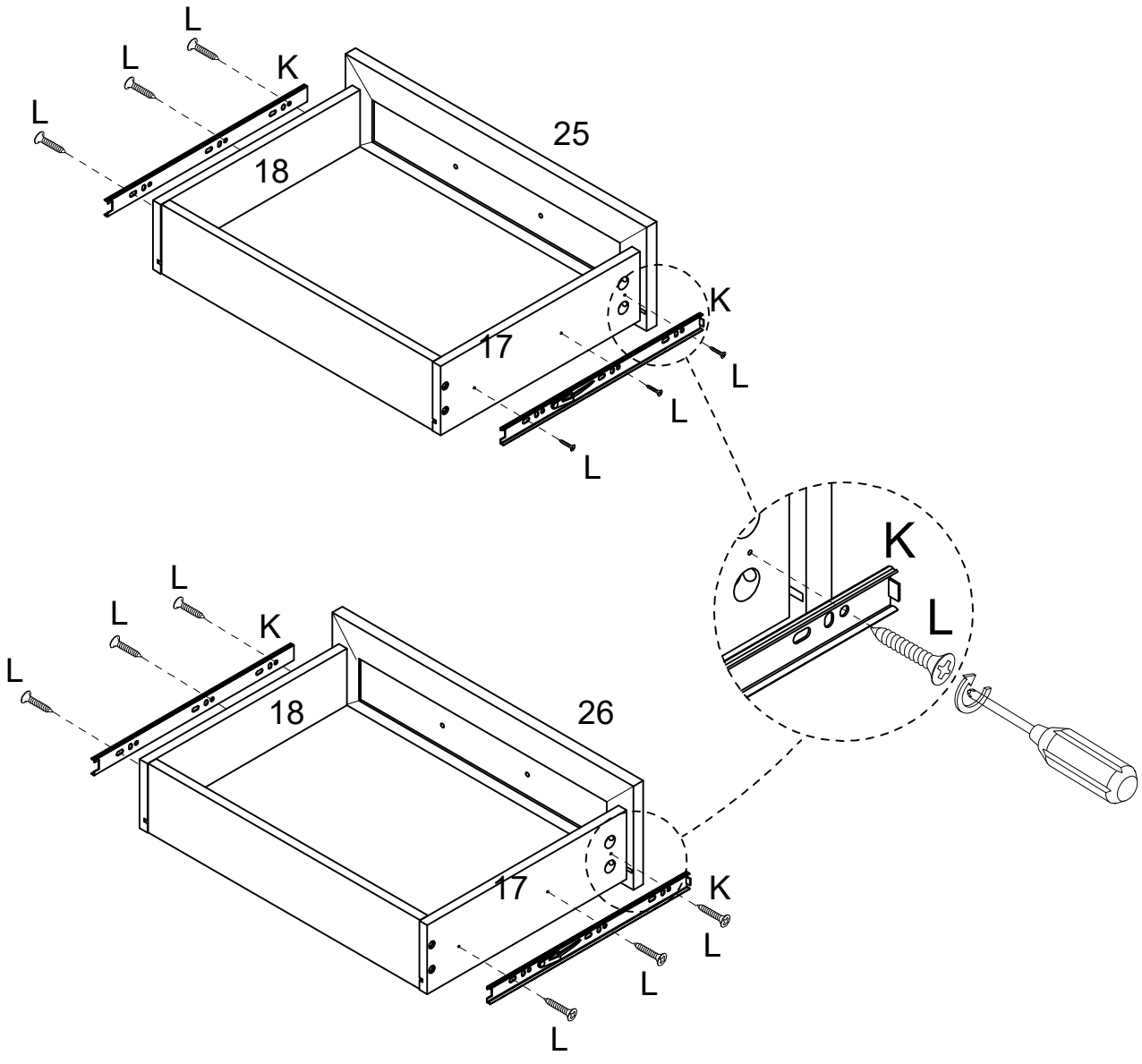

L	K
	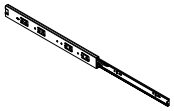
X12	X2

Step 36

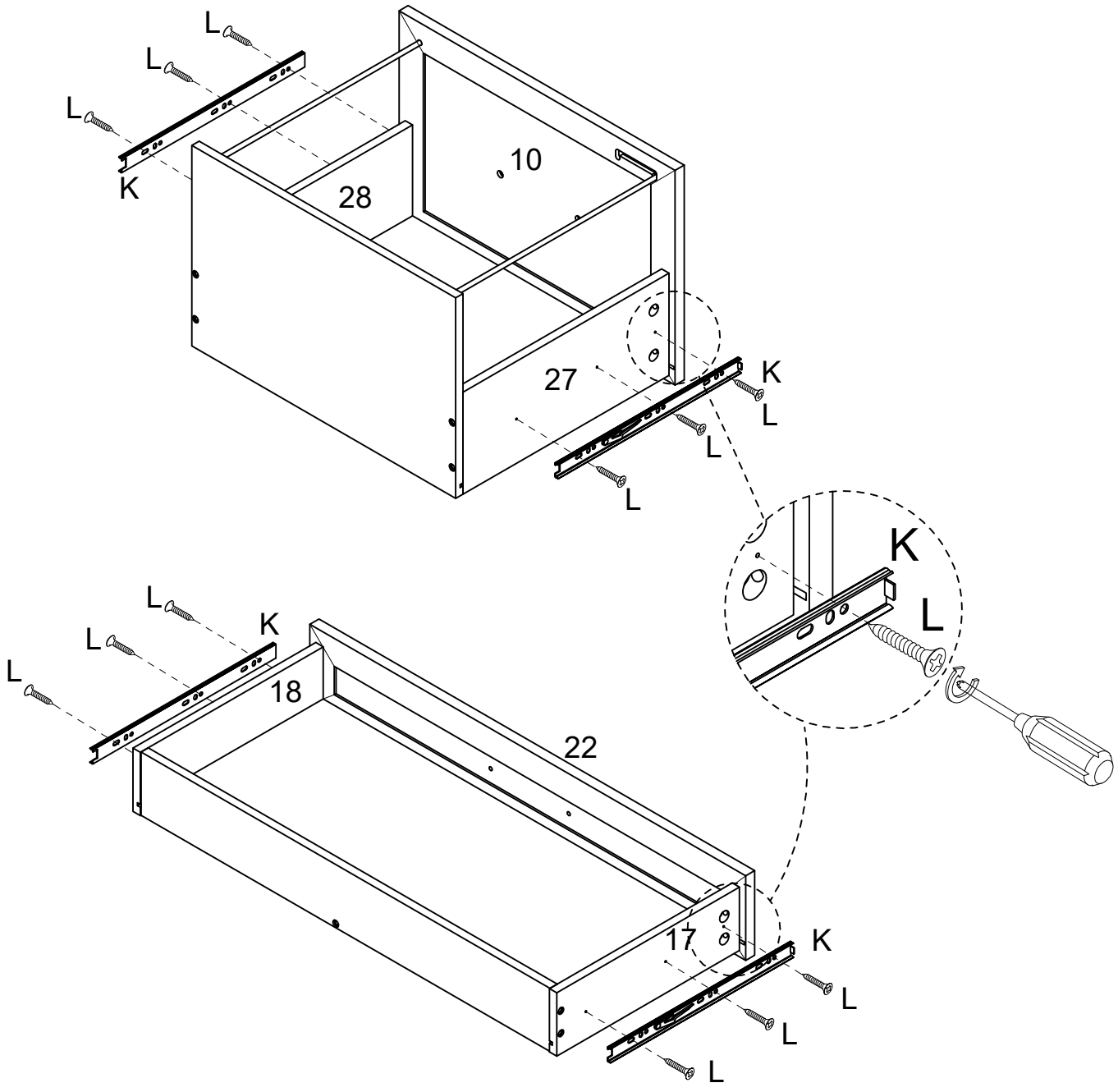

L	K
	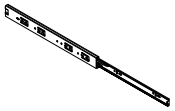
X12	X2

Step 37

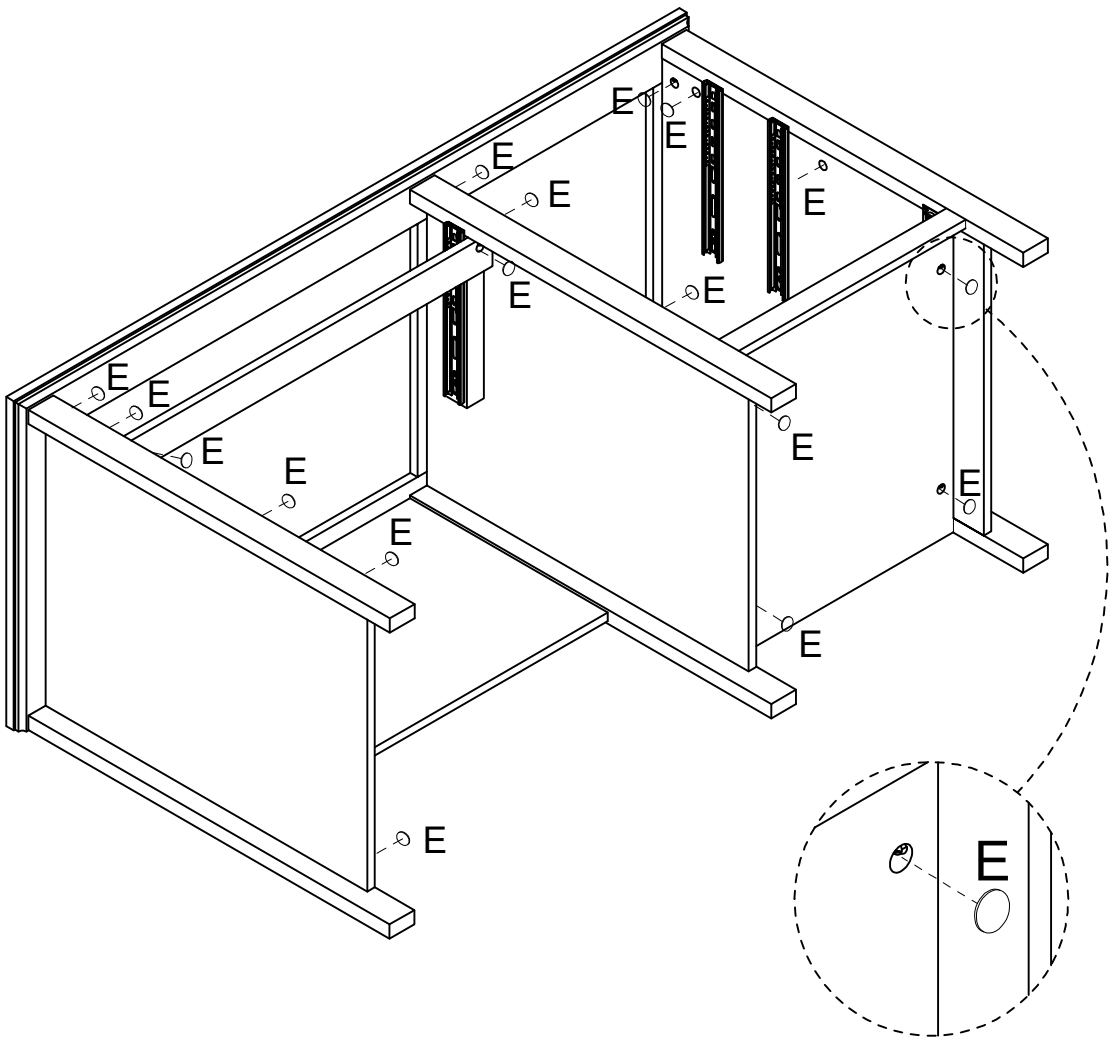

E
⬭
X30

Step 38

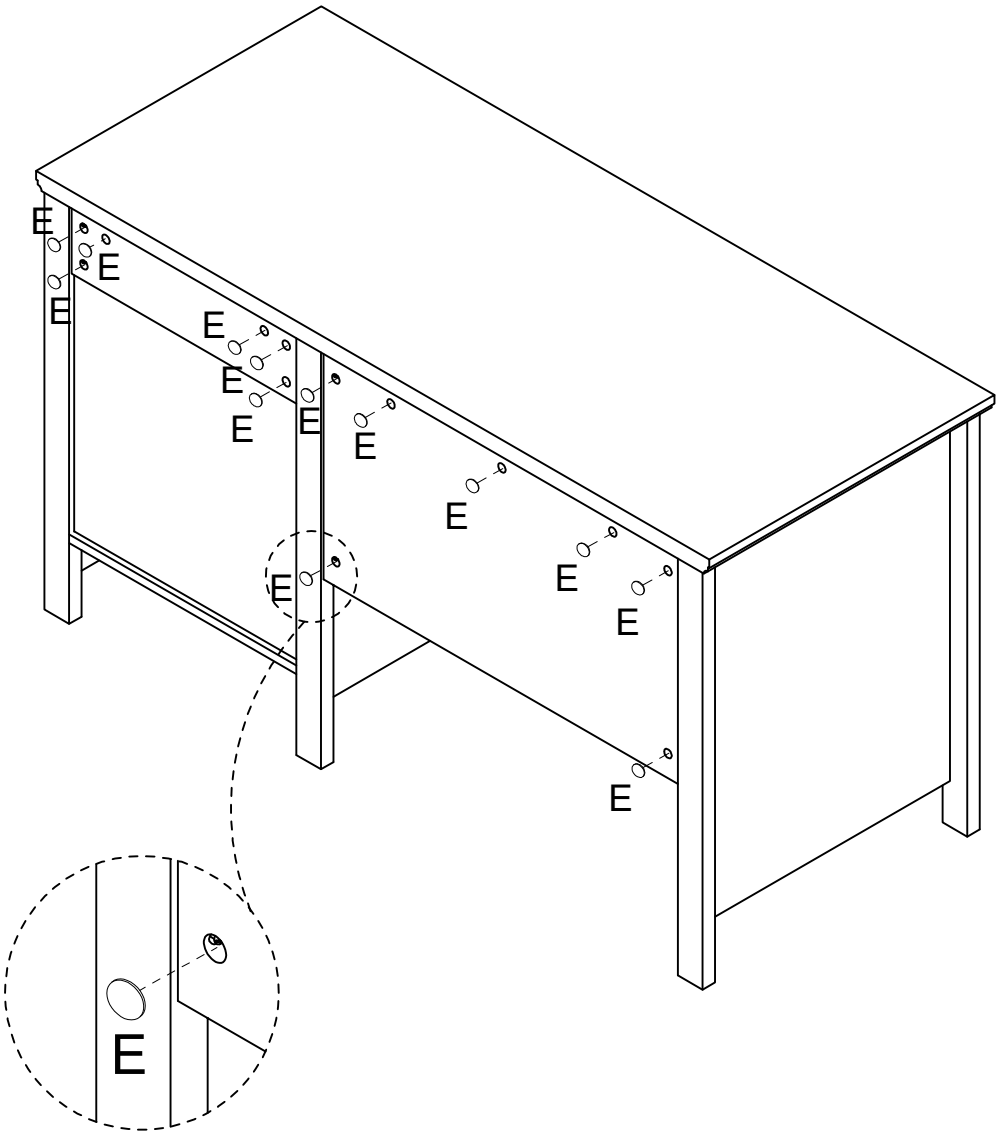

E
⬭
X13

Step 39

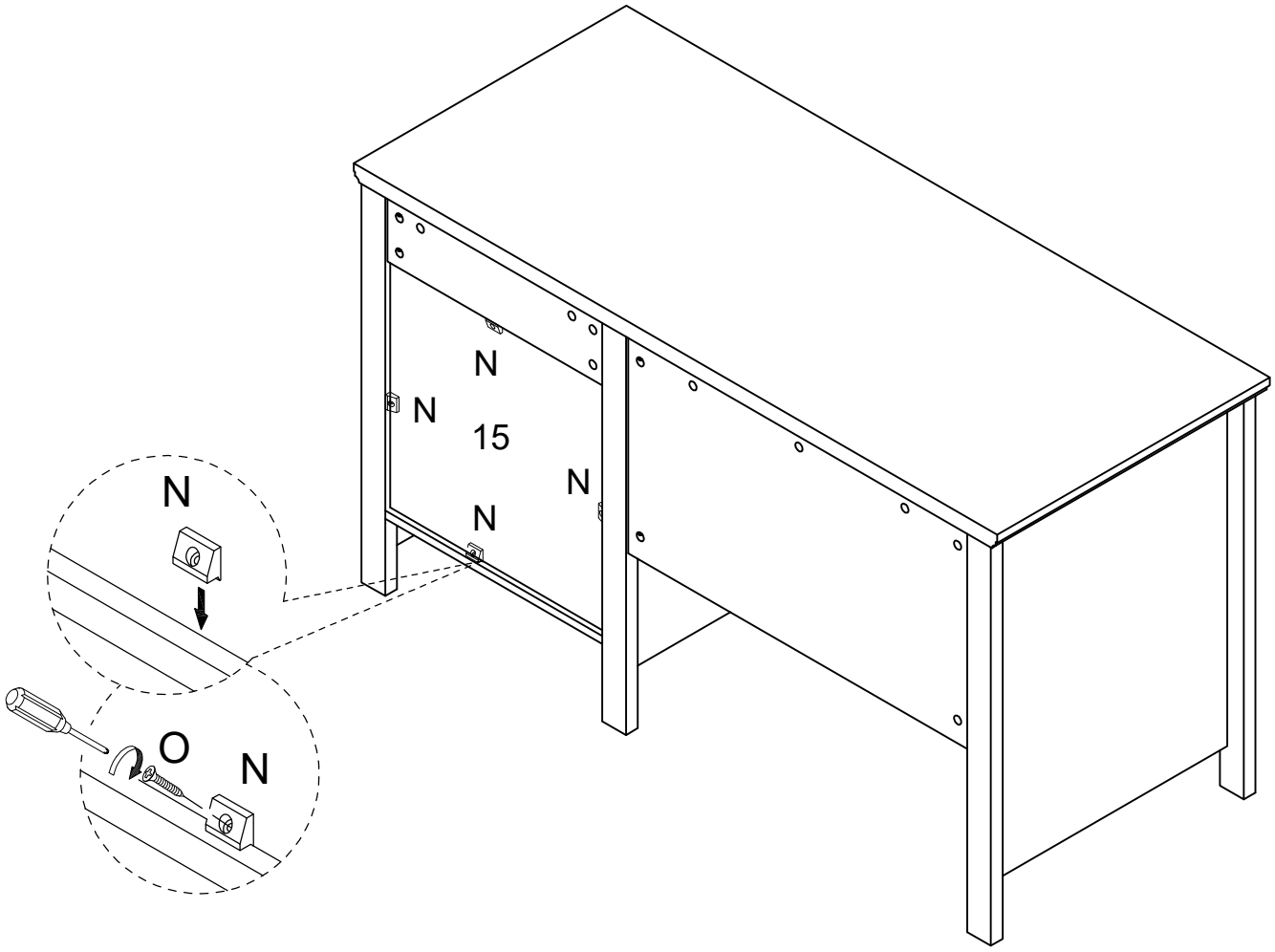

N	O
X4	X4

Step 40

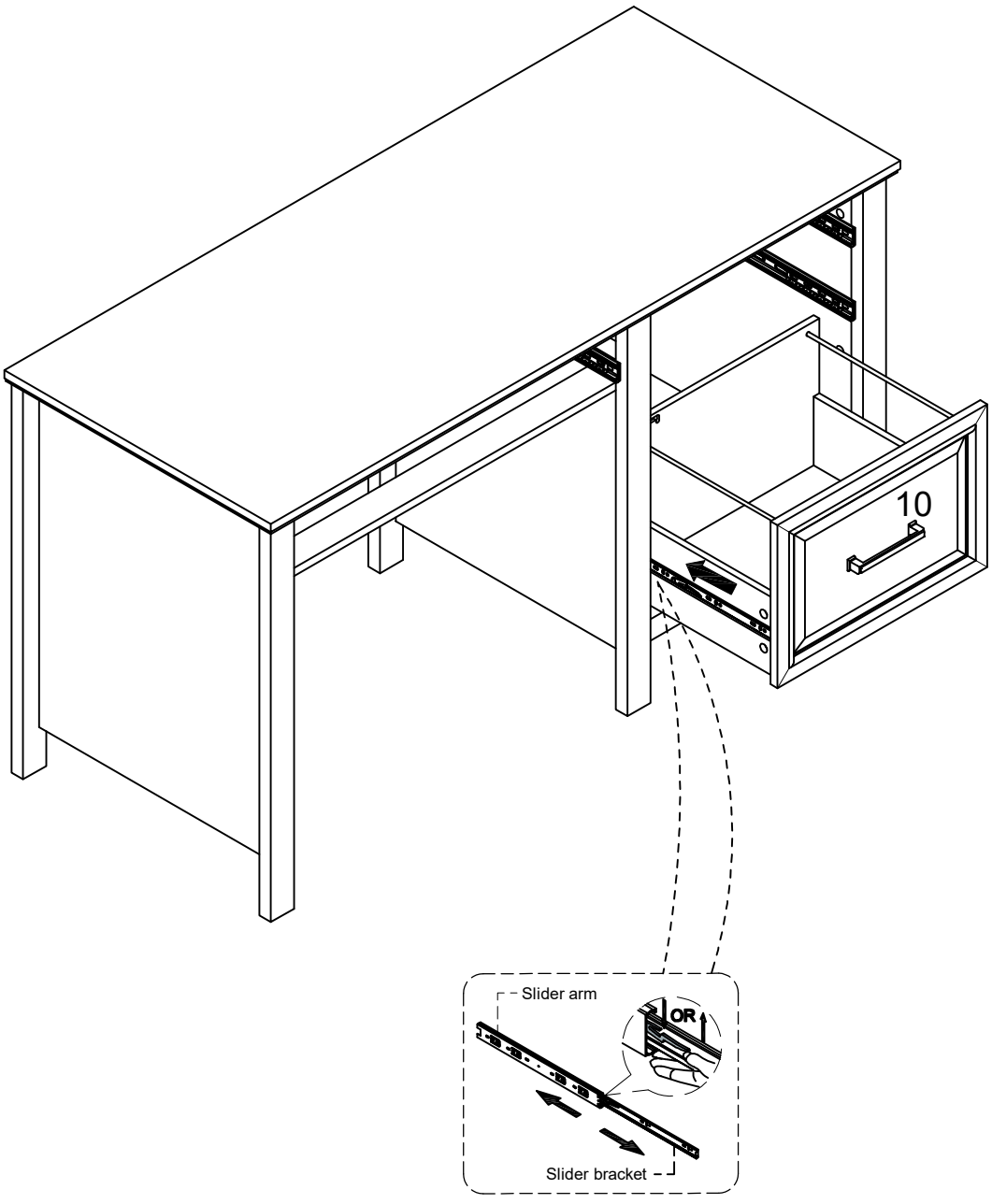

Step 41

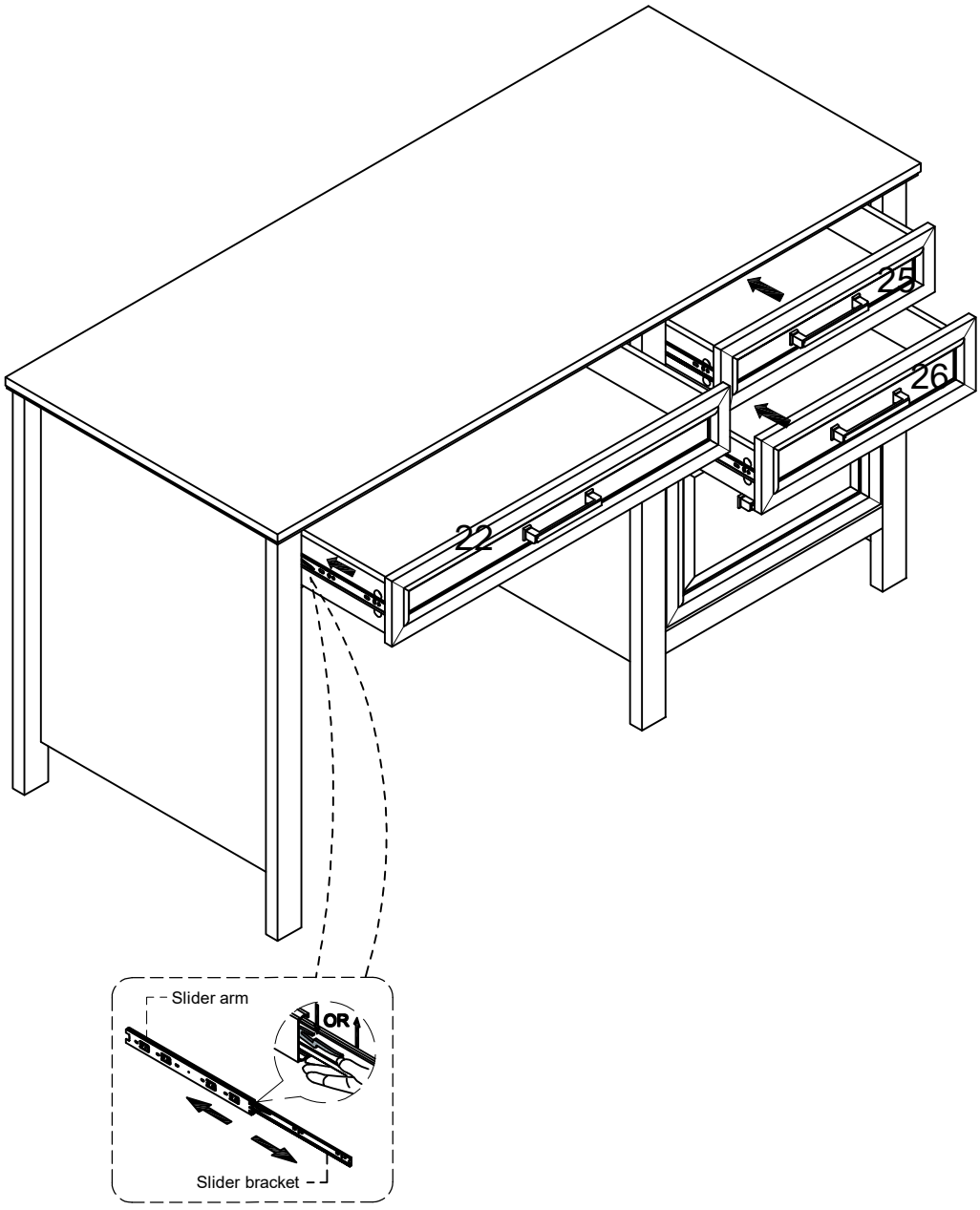
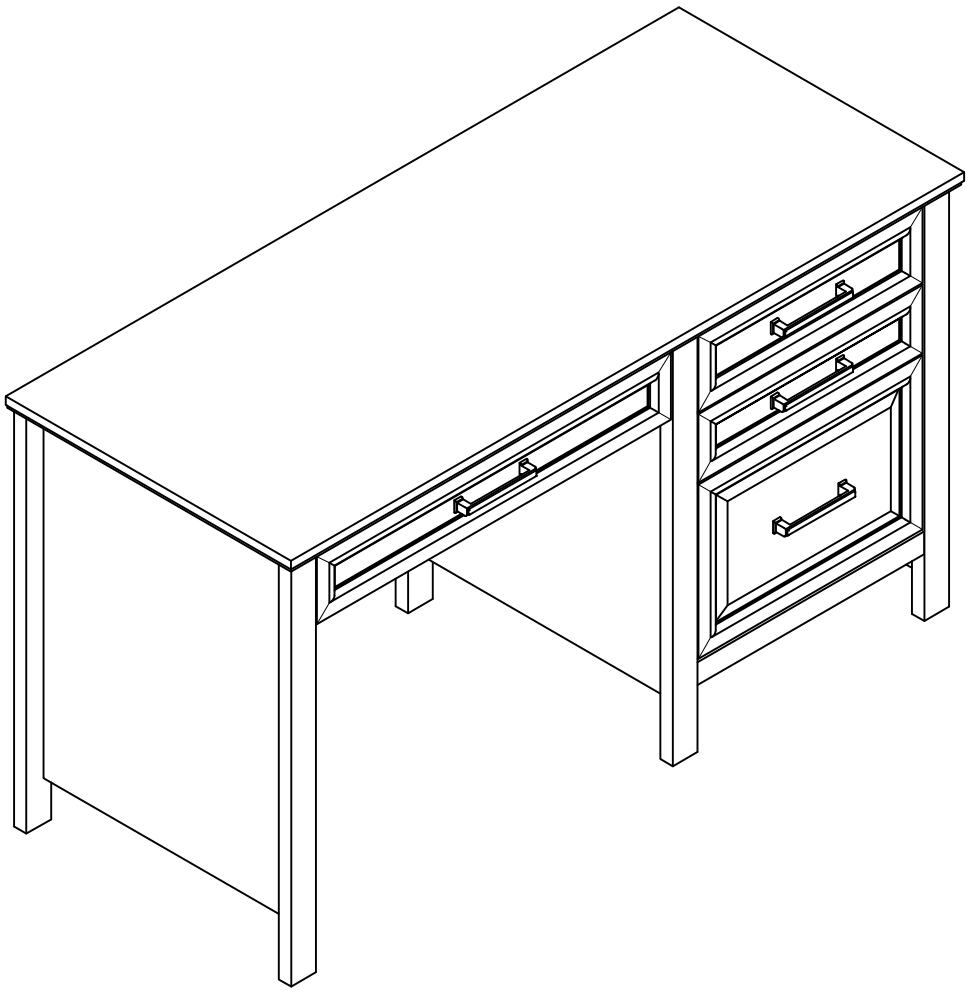
Step 42