ASSEMBLY INSTRUCTIONS



ASSEMBLY INSTRUCTIONS

ASSEMBLY TIPS:

1. Remove hardware from box and sort by size.
2. Please check to see that all hardware and parts are present prior to start of assembly.
3. Please follow attached instructions in the same sequence as numbered to assure fast & easy assembly.

WARNING!

1. Don't attempt to repair or modify parts that are broken or defective. Please contact the store immediately.
2. This product is for home use only and not intended for commercial establishments.

ASSEMBLY TIME	30 MINUTES

PARTS IDENTIFICATION

A	TOP PANEL	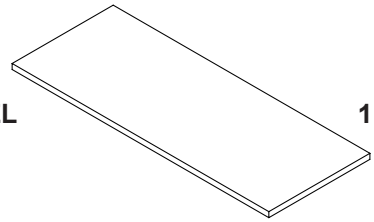	1 PC	C	CROSSBAR	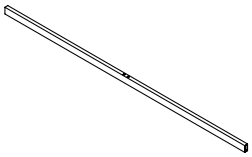	1 PC
B	LEG FRAME	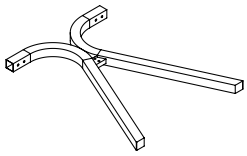	2 PCS	D	SUPPORT LEG	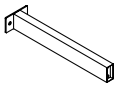	1 PC

HARDWARE IDENTIFICATION

Z

NO	DESCRIPTION	FIGURE	Q'TY	NO	DESCRIPTION	FIGURE	Q'TY
1	BOLT M6x58mm BLK		6 PCS	4	FLOOR PROTECTOR 38x38mm		4 PCS
2	BOLT Ø7x60mm BLK		8 PCS	5	PAD 30x30x3mm	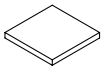	4 PCS
3	SCREW Ø4x16mm BLK	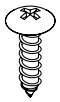	2 PCS	6	ALLEN WRENCH 4mm SR		1 PC

NOTE:

Phillips head screw driver is required in the assembly process; however, manufacturer does not provide this item.

STEP 1

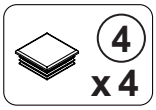

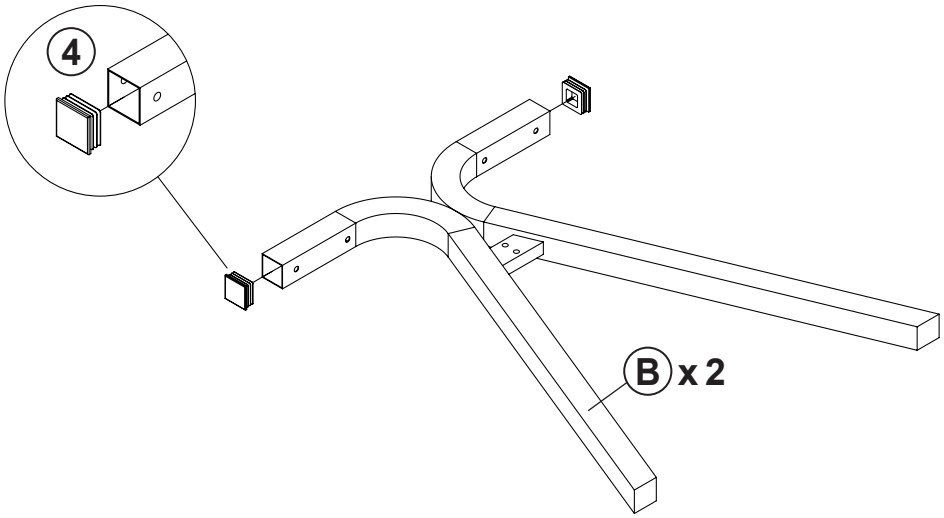

STEP 2

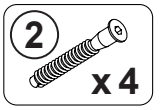

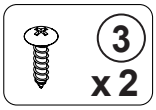

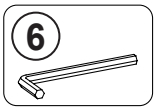

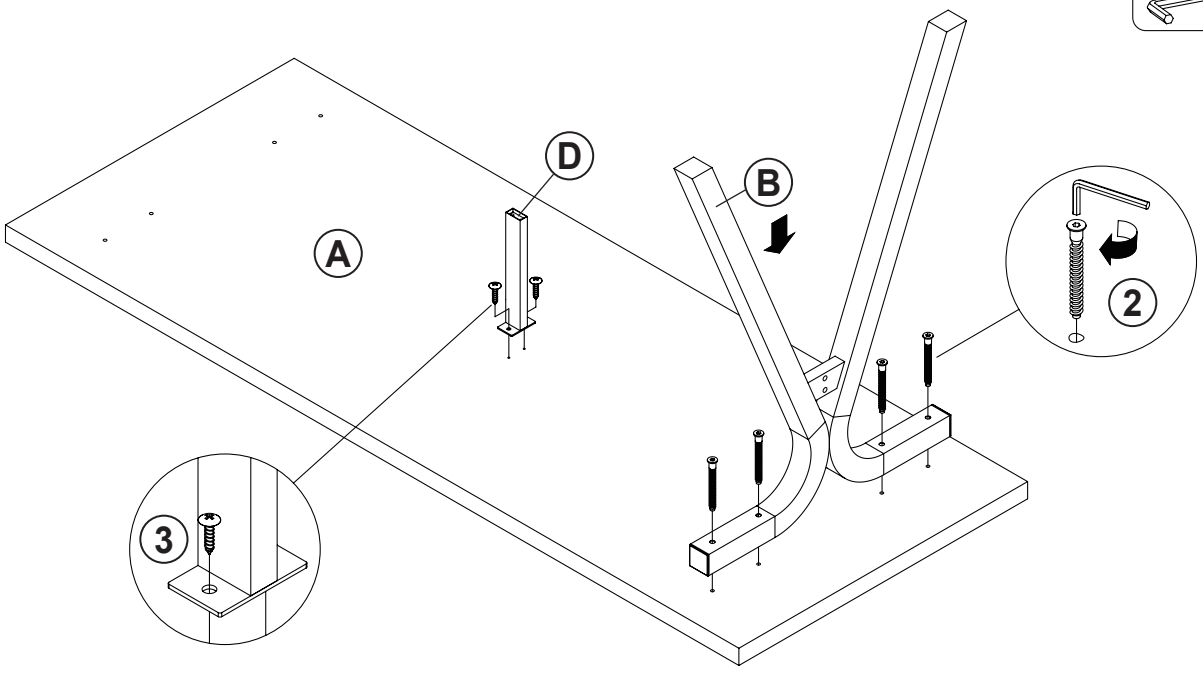

STEP 3

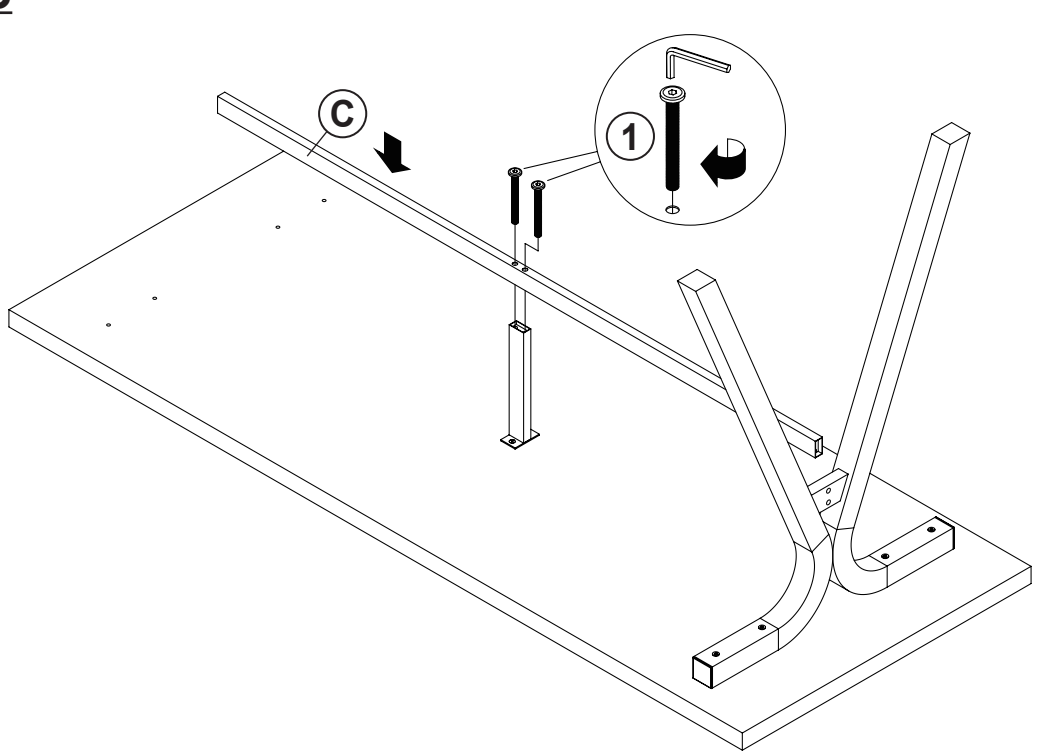

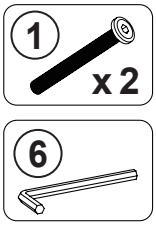

STEP 4

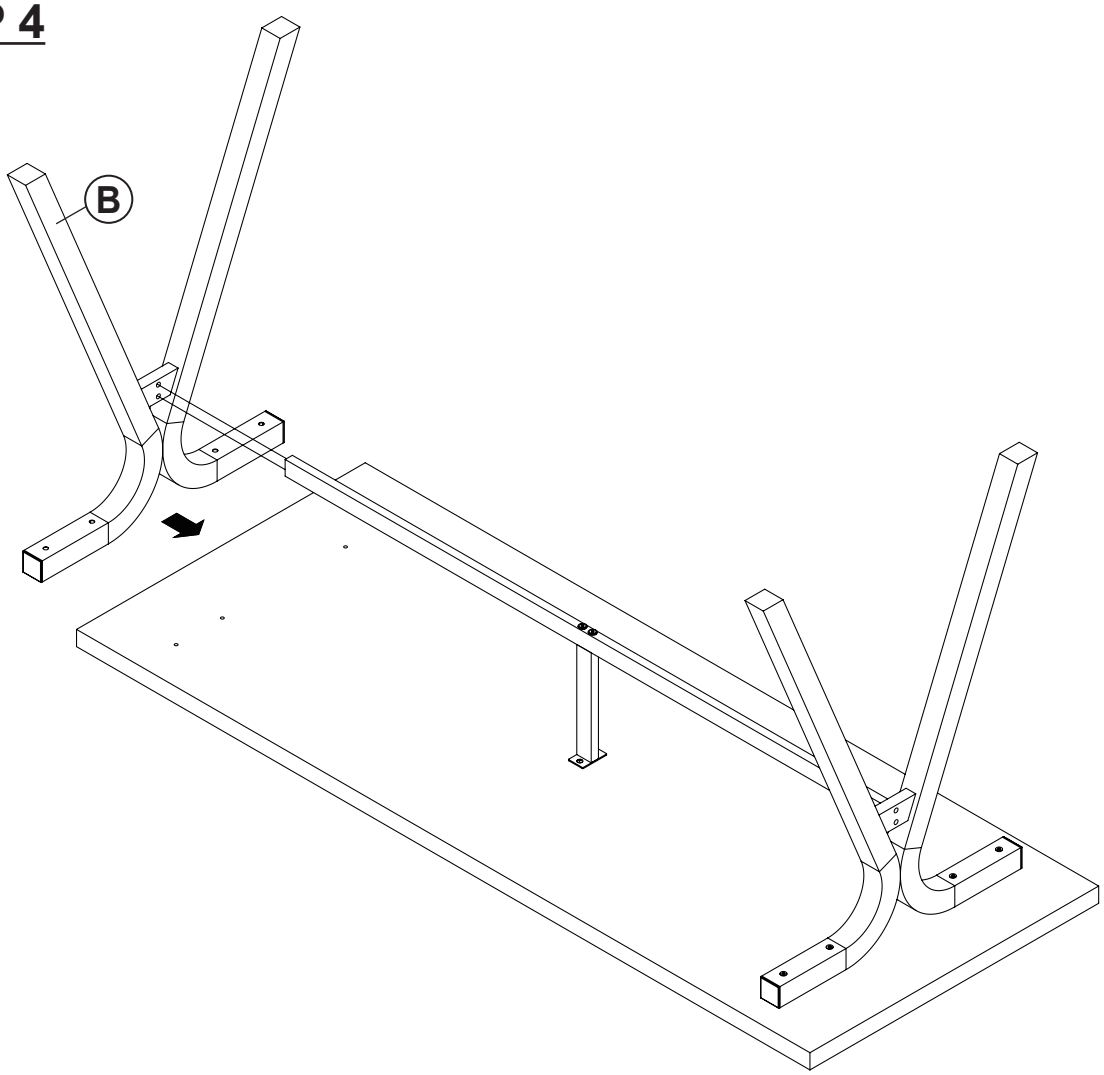

STEP 5

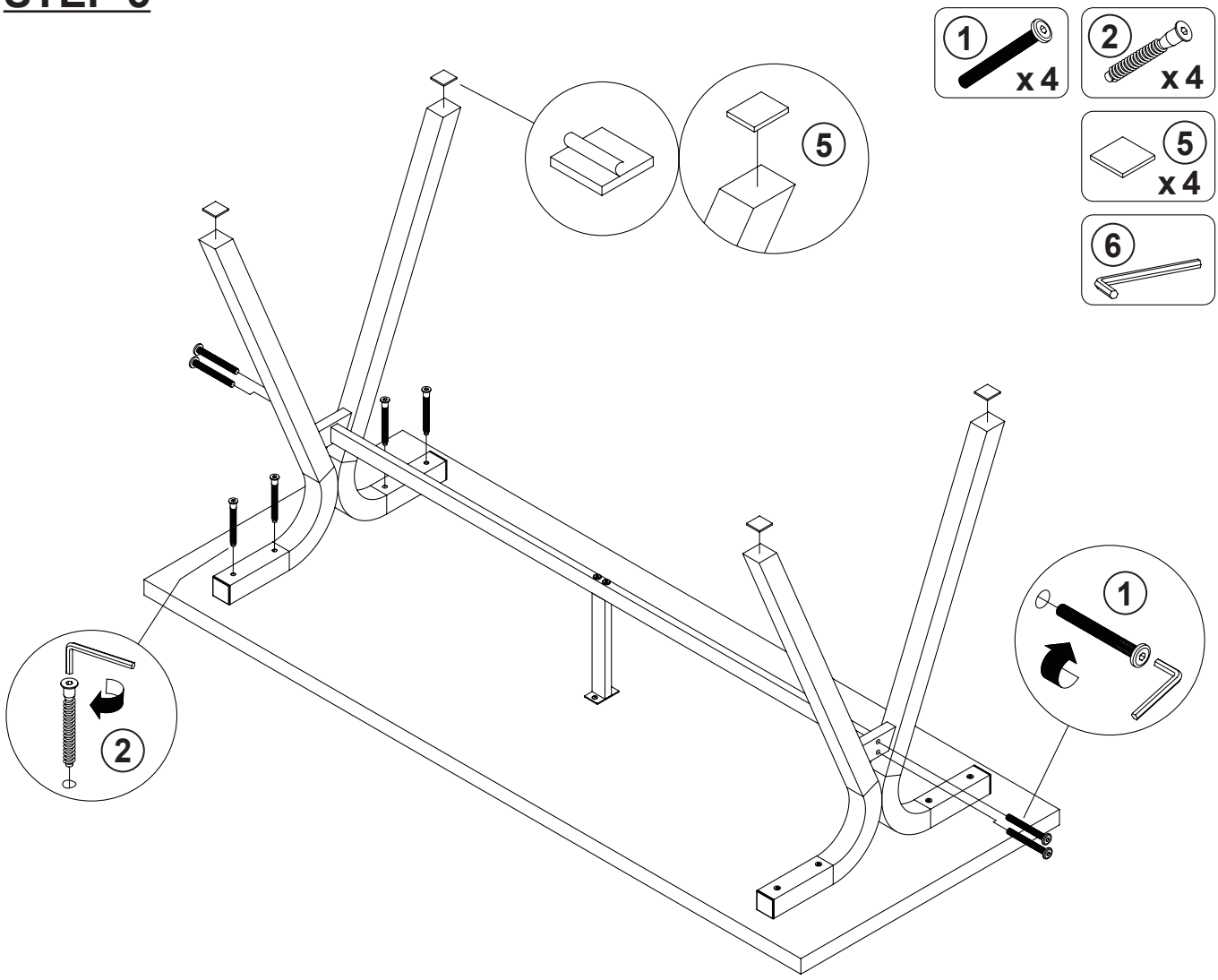

STEP 6

COMPLETE



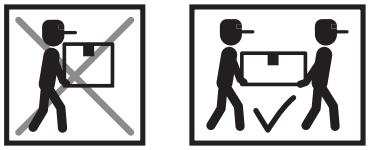

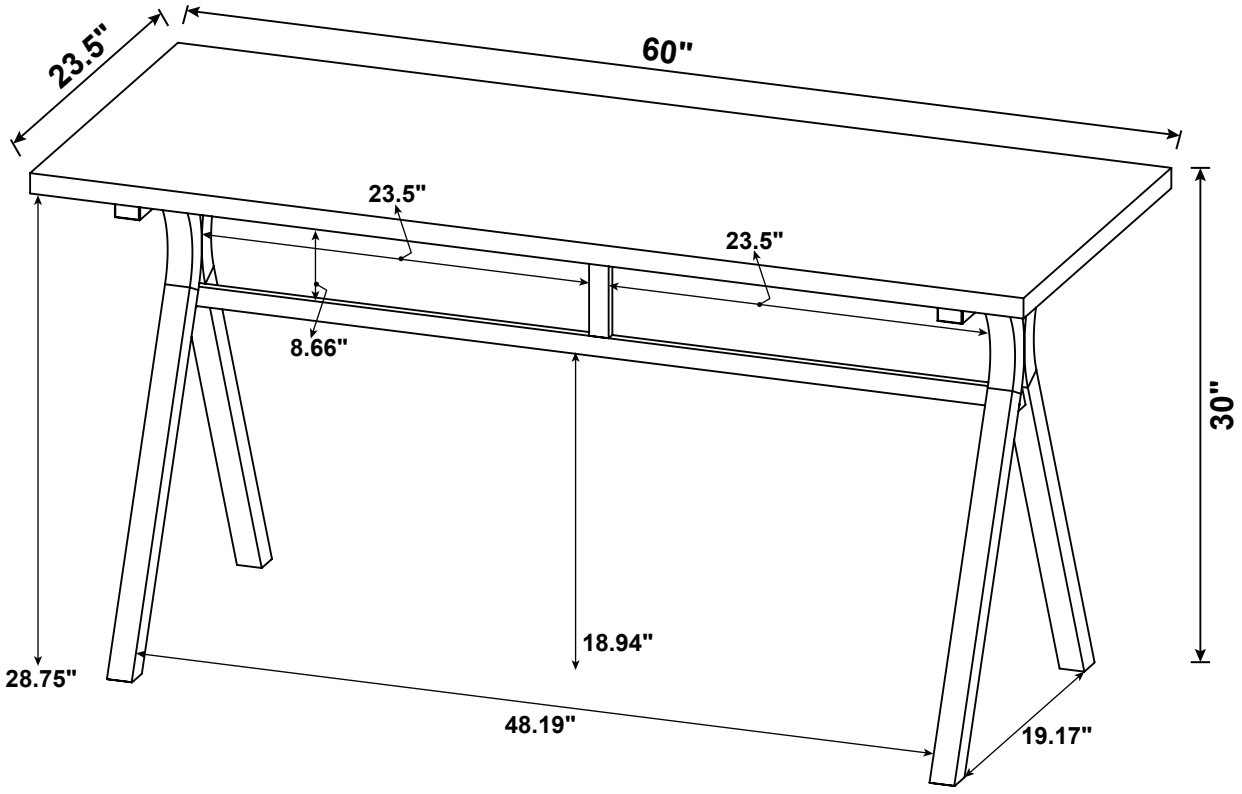

Note : Dimension tolerance ±5%