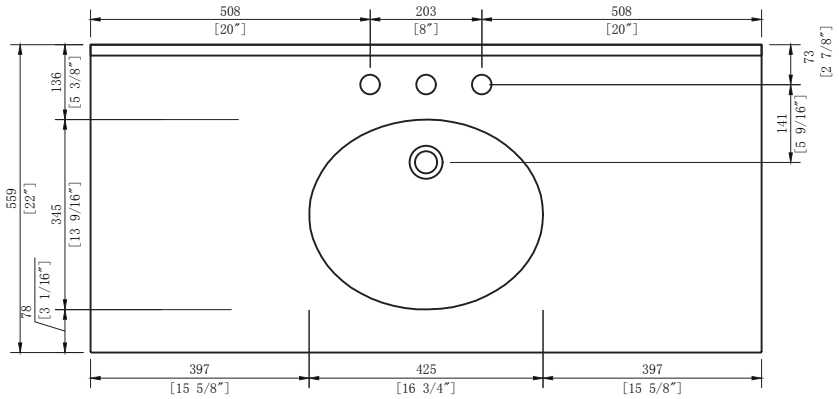
508
[20″]
203
[8″]
508
[20″]
73
[2 7/8″]
136
[5 3/8″]
141
[5 9/16″]
559
[22″]
345
[13 9/16″]
78
[3 1/16″]
397
[15 5/8″]
425
[16 3/4″]
397
[15 5/8″]

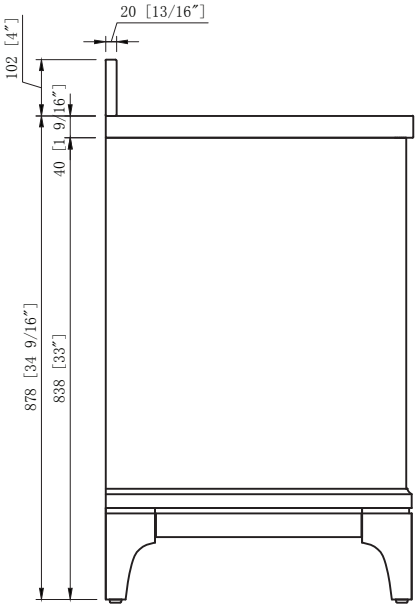
20 [13/16″]
102 [4″]
40 [1 9/16″]
878 [34 9/16″]
838 [33″]

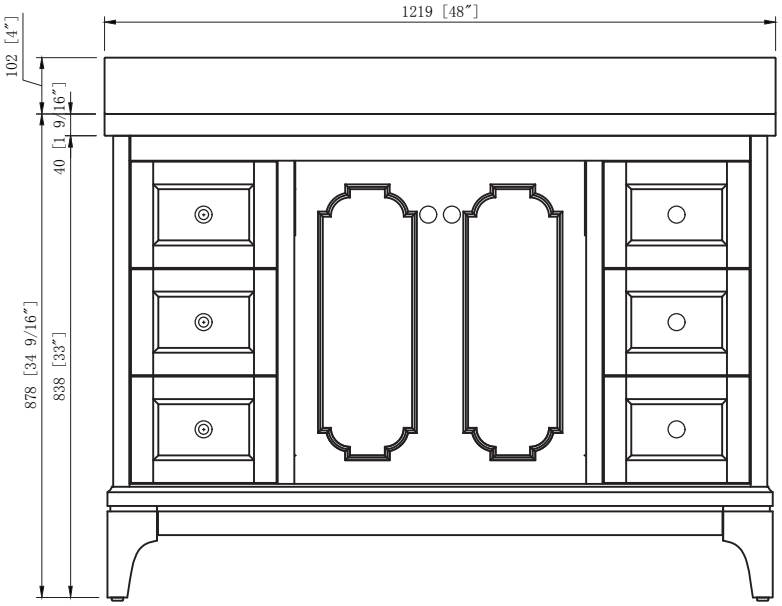
1219 [48″]
102 [4″]
40 [1 9/16″]
878 [34 9/16″]
838 [33″]

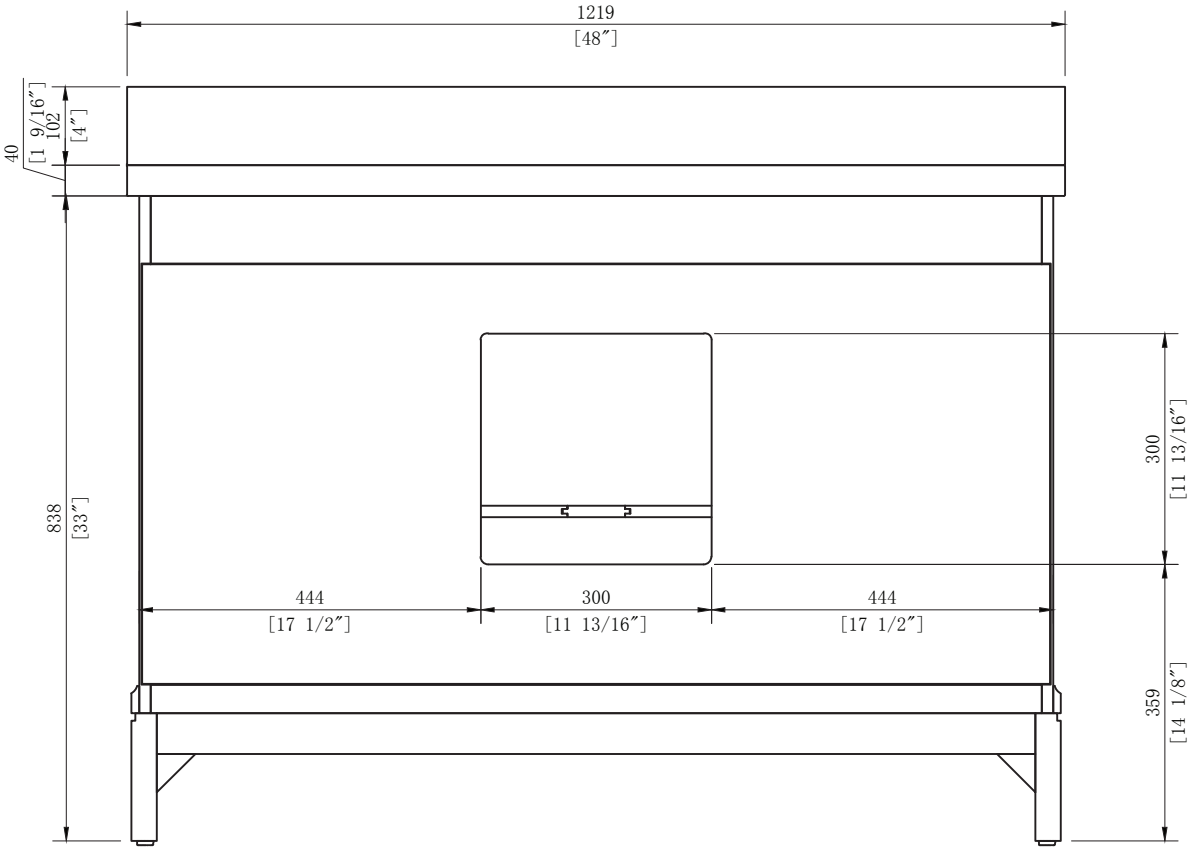
1219
[48″]
40
[1 9/16″]
102
[4″]
838
[33″]
300
[11 13/16″]
444
[17 1/2″]
300
[11 13/16″]
444
[17 1/2″]
359
[14 1/8″]

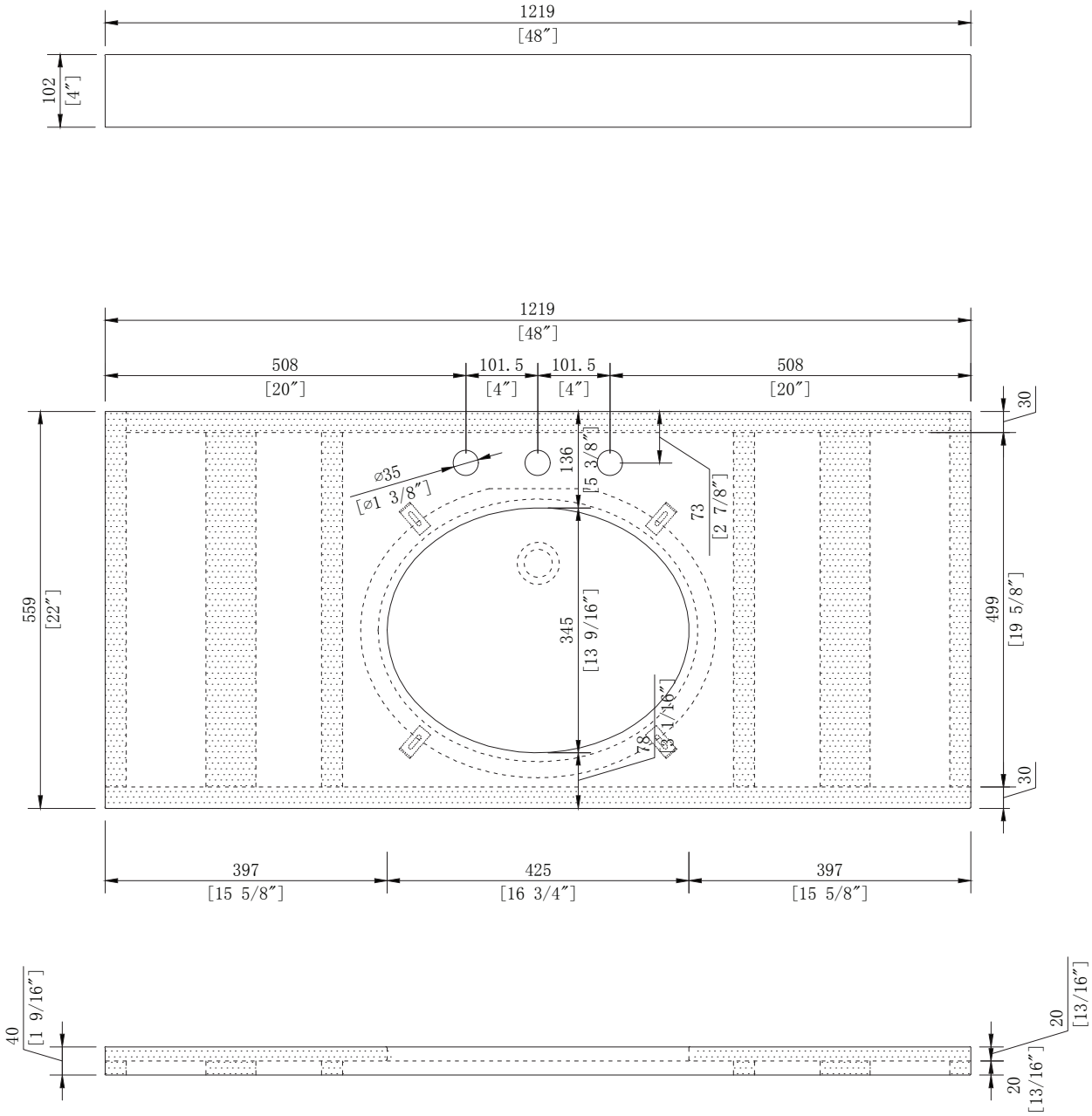
1219
[48″]
102
[4″]
1219
[48″]
508
[20″]
101.5
[4″]
101.5
[4″]
508
[20″]
30
⌀35
[⌀1 3/8″]
136
[5 3/8″]
73
[2 7/8″]
559
[22″]
345
[13 9/16″]
499
[19 5/8″]
78
[3 1/16″]
30
397
[15 5/8″]
425
[16 3/4″]
397
[15 5/8″]
40
[1 9/16″]
20
[13/16″]
20
[13/16″]

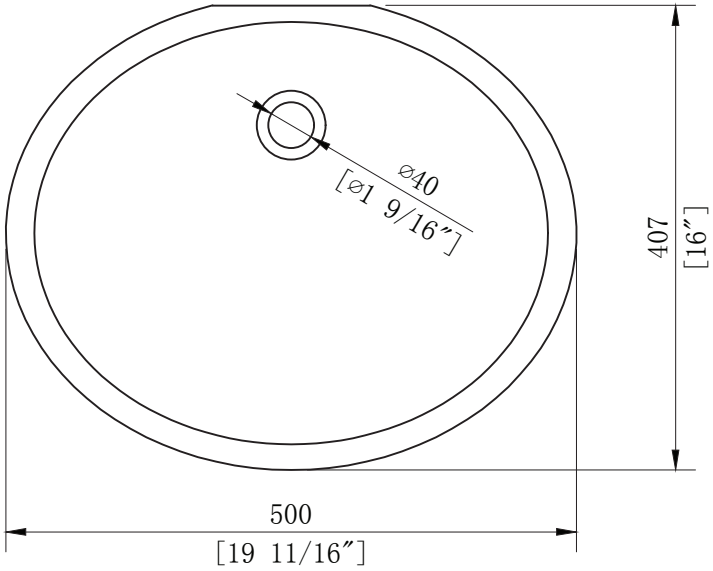
⌀40
[⌀1 9/16″]
407
[16″]
500
[19 11/16″]

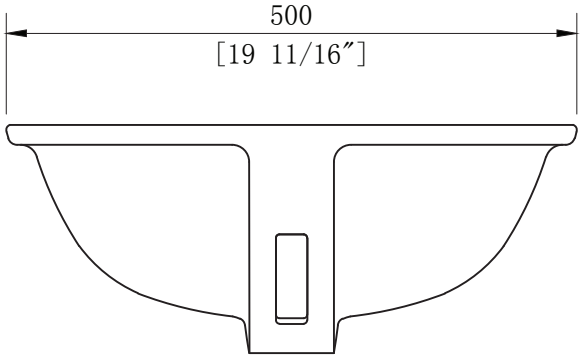
500
[19 11/16″]

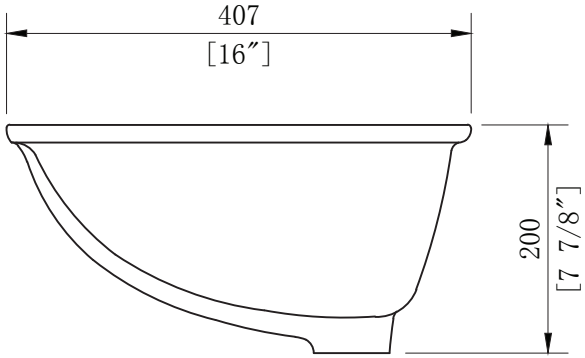
407
[16″]
200
[7 7/8″]

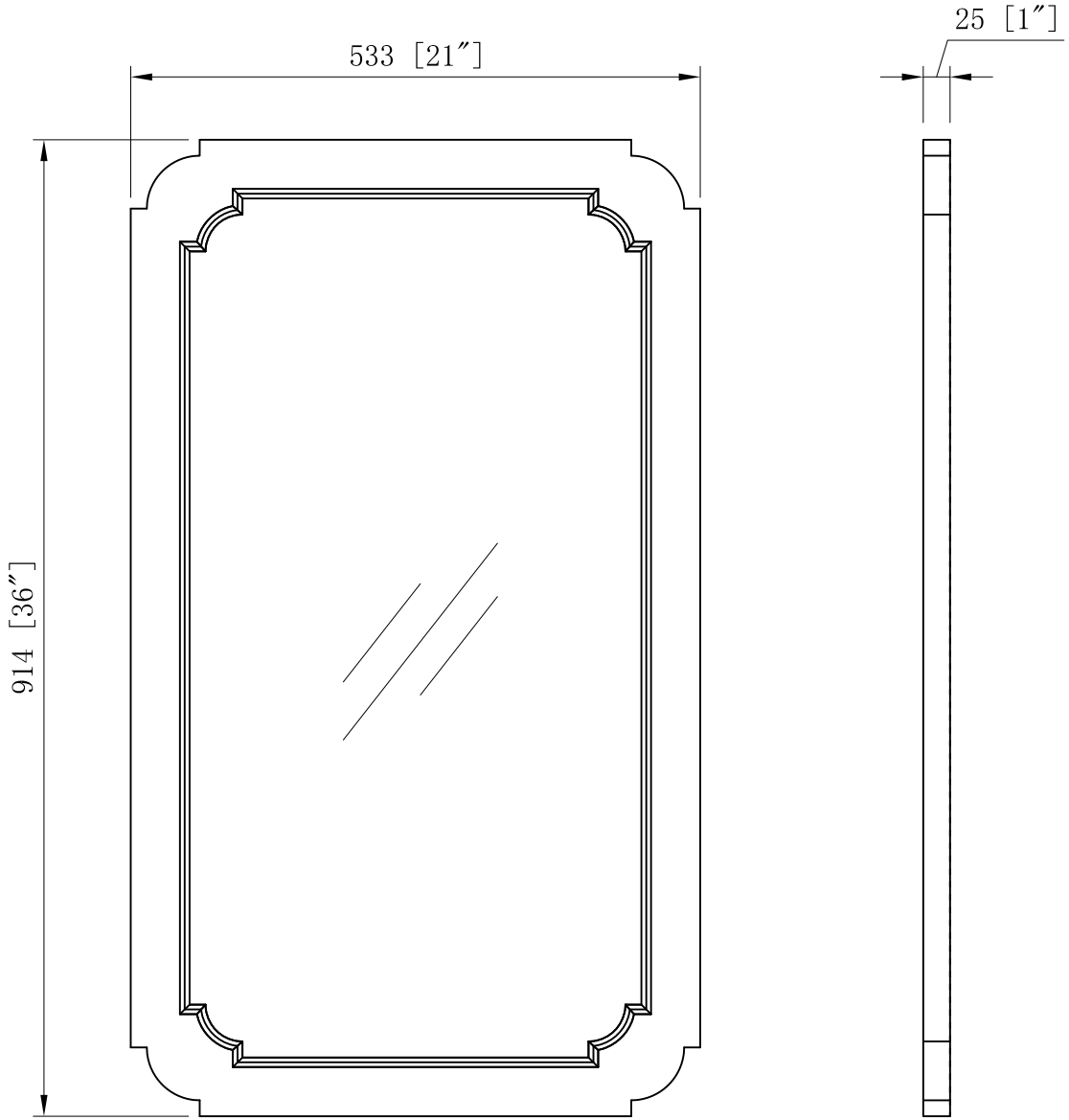
533 [21″]
914 [36″]
25 [1″]

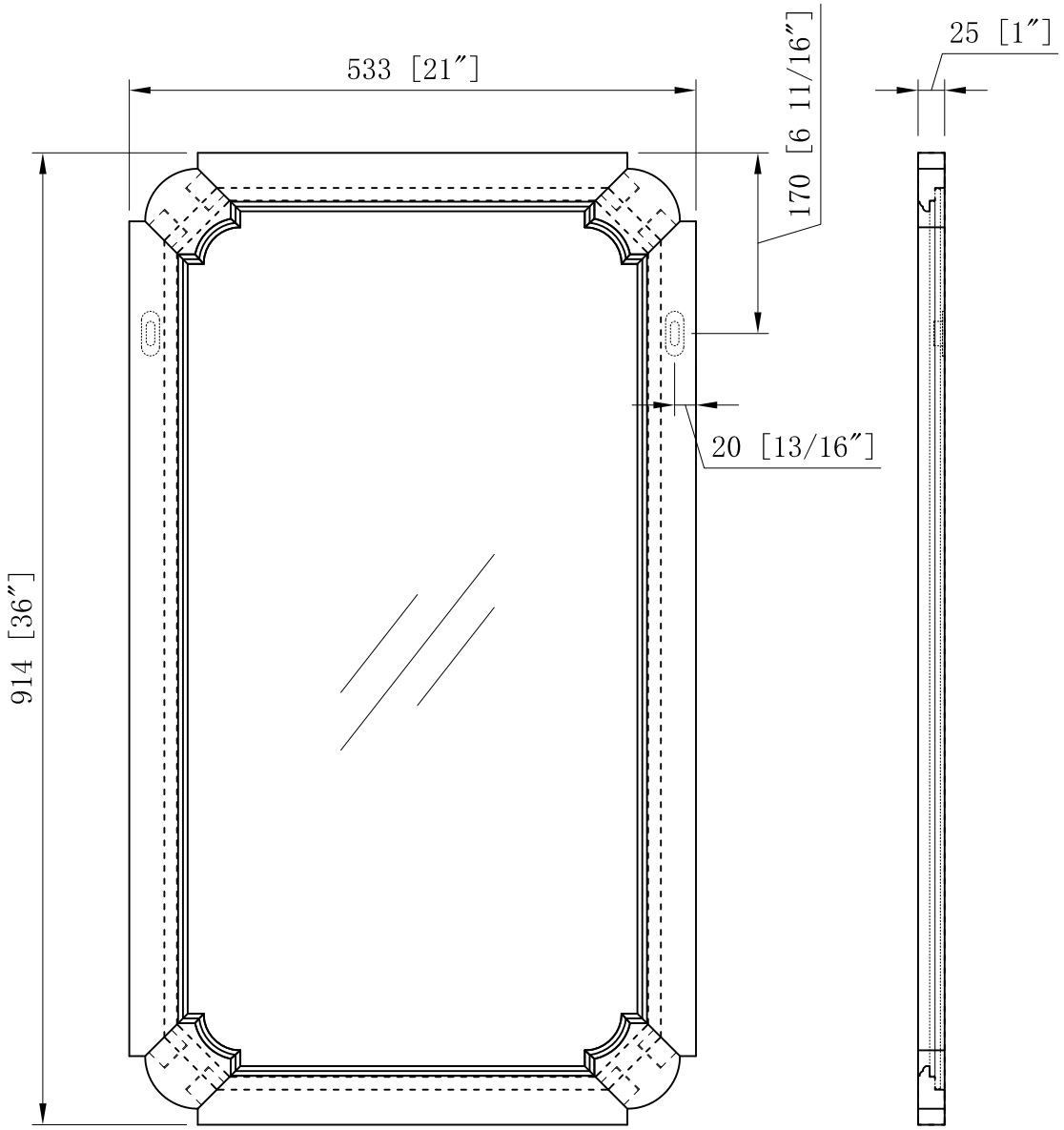
533 [21″]
170 [6 11/16″]
25 [1″]
914 [36″]
20 [13/16″]