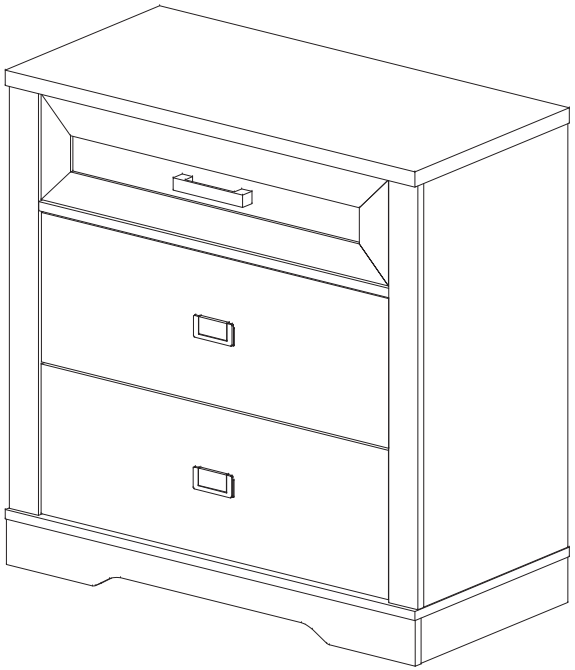

ASSEMBLY INSTRUCTIONS

IMPORTANT : please read this manual carefully before beginning assembly of this product.keep this manual for future reference.

1

★ **Thank you for choosing our products please read the instructions carefully before installation,and please keep the instructions properly**

Tips and tricks

1.Do not attempt to move this furniture without first removing all equipment

2.Death or serious injury may occur when children climb on audio and/or video equipment furniture. A remote control or toys placed on the furnishing may encourage a child to climb on the furnishing and as a result the furnishing may tip over onto the child.

3.Please contact us using the details shown for further advice

⚠ **WARNING** If any parts are missing or damaged, do not return the damaged item to your dealer; contact Customer Service. Never use damaged parts!

2

★ **¡Gracias por elegir nuestros productos, por favor lea las instrucciones cuidadosamente antes de la instalación, y guárdelas correctamente!**

Consejos y trucos

1.Si no quita todos los equipos en el primer lugar, no intente mover este mueble

2. Cuando los niños suben a los muebles con el equipo de audio y / o video, la muerte o las lesiones graves podrían ocurrir.El control remoto o los juguetes colocados en el mueble pueden estimar a un niño a subir en el él y el mueble podría volcarse sobre el niño.

3.Póngase en contacto con nosotros utilizando los detalles mostrados para obtener más sugerencias.

⚠ **ADVERTENCIA** Si las piezas faltan o están dañadas, no devuelva el producto dañado a su distribuidor; póngase en contacto con los Servicios al Cliente. ¡Nunca utilice las piezas dañadas!

3

★ **Vielen Dank für Ihre Auswahl für unsere Produkte, lesen Sie bitte die Anweisungen sorgfältig vor Ihrer Installation und halten Sie bitte die Anweisungen richtig!**

Tipps und tricks

1.Versuchen Sie bitte nicht, diese Möbel zu bewegen, ohne zuerst alle Geräte zu entfernen

2.Wenn die Kinder auf Audio und / oder Videogerätemöbel klettern, kann Tod oder schwere Verletzungen kommen. Eine Fernbedienung oder Spielzeug kann die Kinder ermutigen, die auf die Einrichtung gestellt wird, sich auf die Einrichtung zu klettern. Dies bewirkt, dass die Möbel auf Ihre Kinder umfallen könnte.

3.Bitte kontaktieren Sie uns mit den Details für weitere Beratung

⚠ **WARNING** Wenn irgendwelche Teile fehlen oder beschädigt sind, geben Sie bitte den beschädigten Artikel nicht an Ihren Händler zurück; Kontaktieren Sie bitte mit dem Kundendienst. Verwenden Sie bitte niemals beschädigte Teile!

4

★ **弊社の製品を選んでくれてありがとうございます。インストールする前に説明書をご覧にいただき、それに当説明書を適切に保存してください。**

提示と技巧

1.設備を全て開かない場合、当設備を移動することはできません。

2.子どもがステレオまたはビデオの設備の上に登ると、体を壊したり、ひどく傷ついたりする恐れがある。設備のリモコンと玩具によって、子ども が設備の上に登りたがっているかも知れないので、設備は子どもの身にに倒れる危険がある。

3.設備の使用に関わる詳細な情報を弊社にご連絡してください。

⚠**警告**どんな部品が紛失したり壊れたりする場合でも、そのままディーラーのところへ返送しないでくだい、顧客サービスセンターに連絡してください。壊れた部品を使用しないてください。

5

★ **Nous vous remercions d'avoir sélectionné nos produits, lisez les instructions attentivement avant l'installation, et gardez les instructions correctement s'il vous plaît!**

Conseils et astuces

1.Ne tentez pas de déplacer ce mobilier sans enlever tout l'équipement.

2. Des dégâts ou des blessures graves pourraient survenir lorsque les enfants grimpent sur des meubles audio et / ou vidéo. Une télécommande ou des jouets places sur le meuble pourraient encourager un enfant à grimper sur le meuble, il en résulte que le meuble pourrait basculer sur l'enfant.

3.Contactez-nous en utilisant les détails affichés pour obtenir les conseils s'il vous plaît

⚠ **AVERTISSEMENT** S'ily a des pièces manquantes ou endommagées, ne renvoyez pas l'article endommagé à votre vendeur; Contactez le service clientèle. Ne jamais utiliser de pièces endommagées!

6

★ **Grazie per aver scelto i nostri prodotti, si prega di leggere attentamente le istruzioni prima dell'installazione e rispettare le istruzioni corrette!**

Suggerimenti e trucchi

1.Non tentare di spostare questo mobile senza prima rimuovere tutte le apparecchiature

2. Possono verificarsi morti o gravi lesioni quando i bambini salgono su mobili per arredamento audio e/o video. Un telecomando o i giocattoli messi sull'arredamento possono incoraggiare un bambino ad arrampicarsi sull'arredamento, e di conseguenza l'arredamento può piegarsi sul bambino.

3.Vi preghiamo di contattarci utilizzando i dettagli mostrati per ulteriori consigli

⚠ **AVVERTENZA:** Sse mancano o sono danneggiate parti, non restituire l'elemento danneggiato al rivenditore; Contattare il Servizio Clienti. Non utilizzare mai parti danneggiate!

Free replacement of damage

WHAT'S IN THE BOX

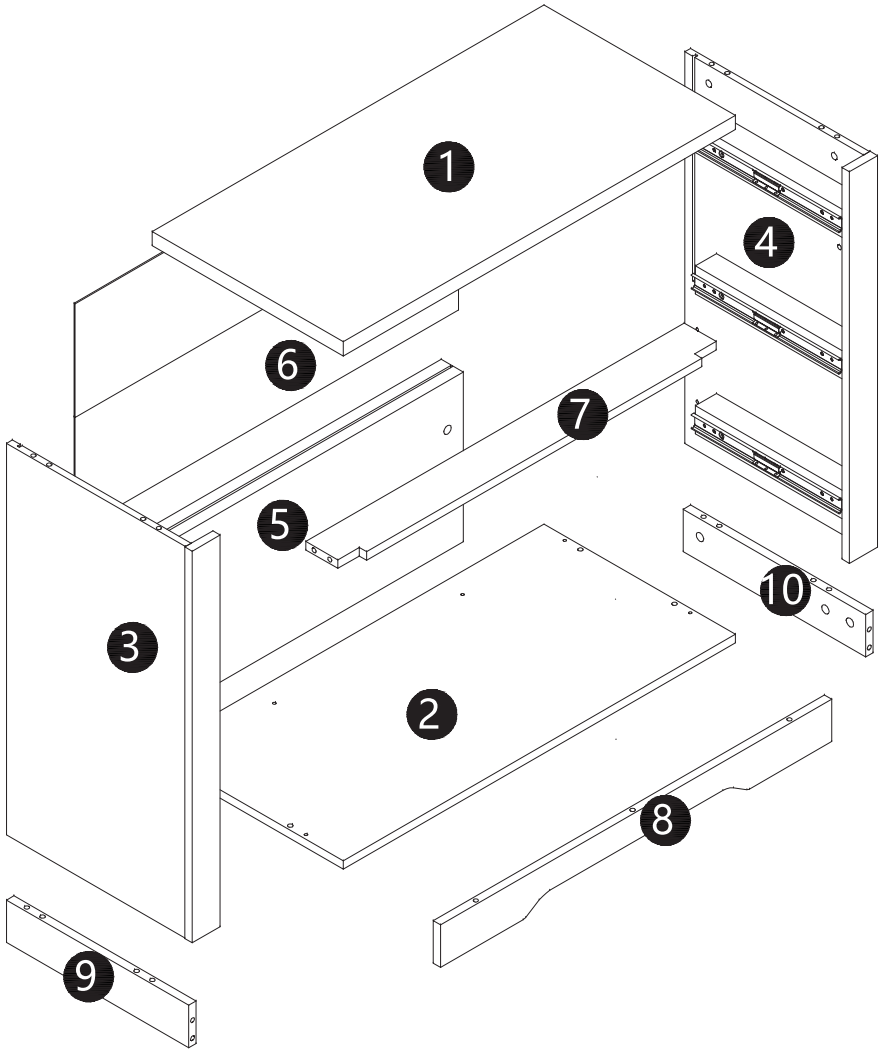

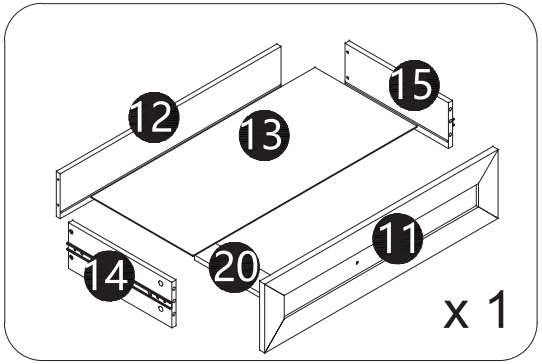

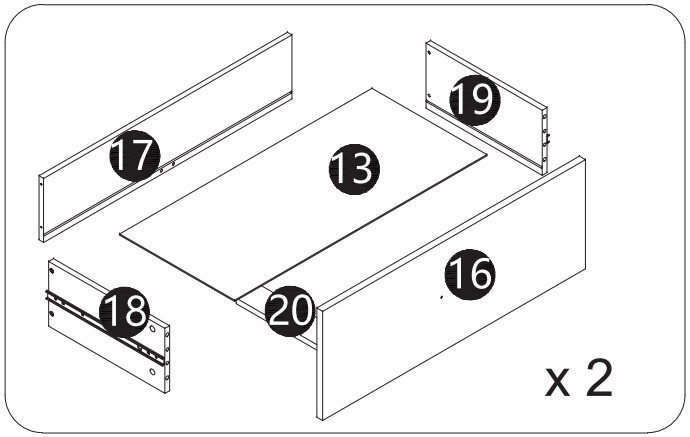

WHAT'S IN THE BOX



Cam bolt
φ6*35mm
A x 36

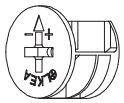

Cam lock
φ15*9mm
B x 36



Wooden dowel
φ6*30mm
C x 27

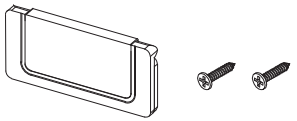

Handle with screws
D x 2



Screw
φ4*35mm
E x 24

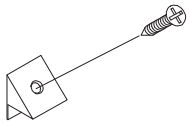

Plastic wedge
with screw
F x 8

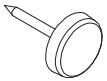

PVC nail with pin
G x 6

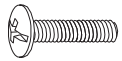

Handle bolt
M4x10mm
H x 2

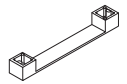

Handle
I x 1

J x 2

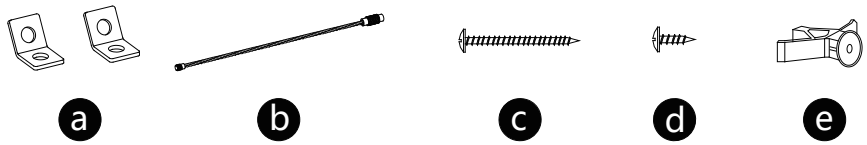

a b c d e

Tipping restraint hardware kit
(inside plastic bag)

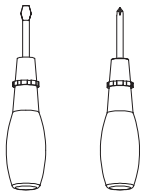

Tools Required
(Not included)

1

INSTALLATION STEPS

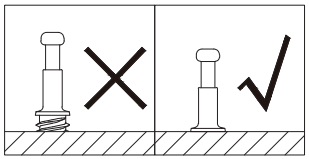

·Screw bolts (A) into panels (1,2,8).

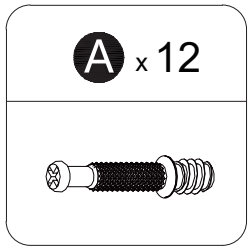

2 INSTALLATION STEPS

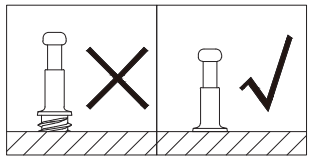

·Screw bolts (A) into panels (3,4).

3

INSTALLATION STEPS

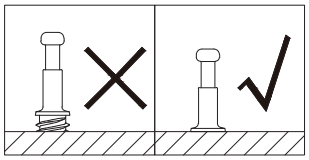

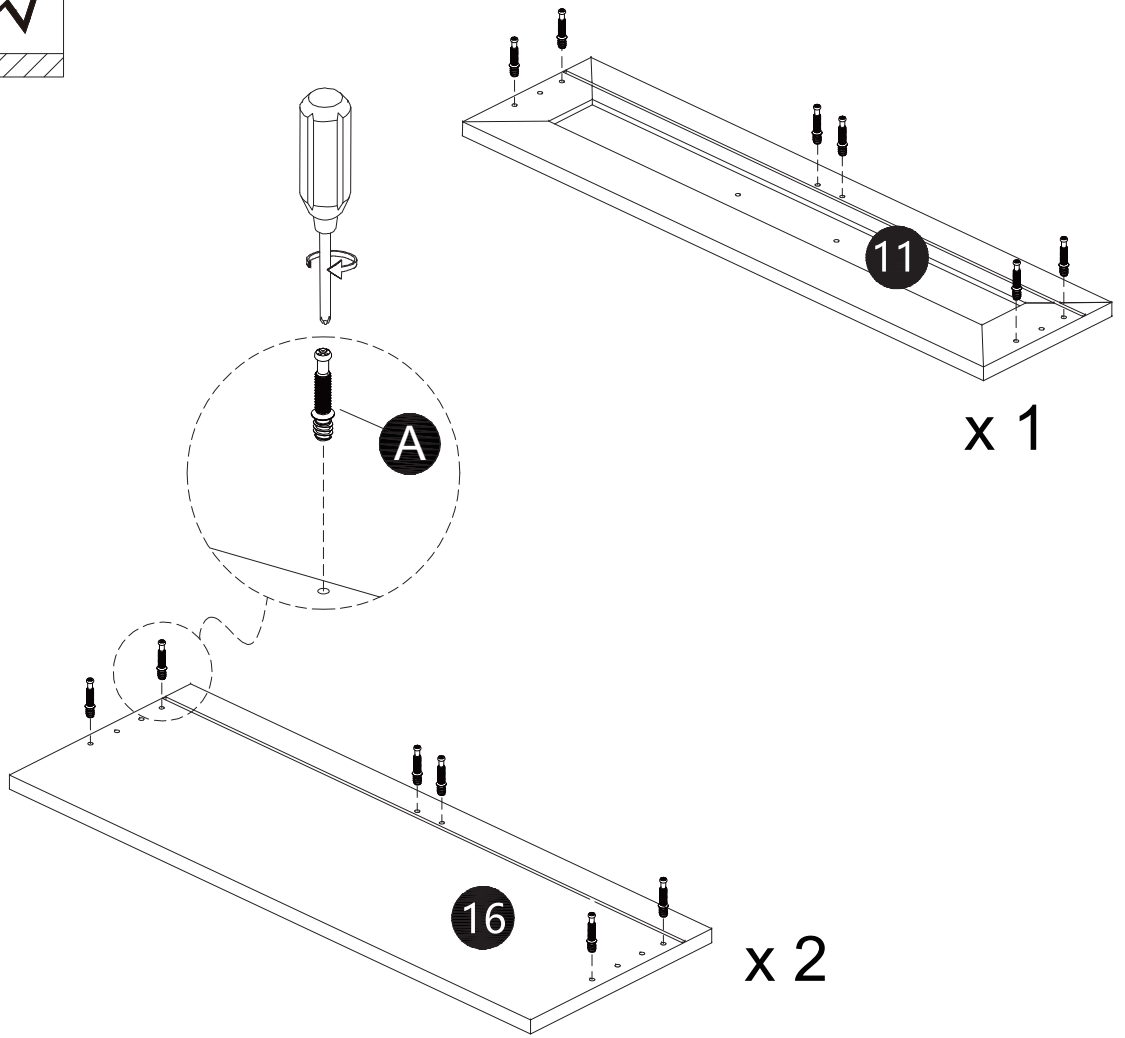

·Screw bolts (A) into panels (11,16).

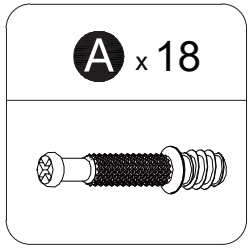

4

INSTALLATION STEPS

2 Person Task

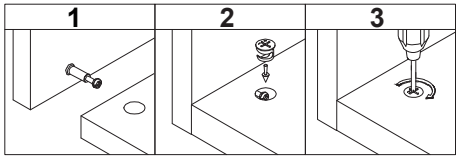

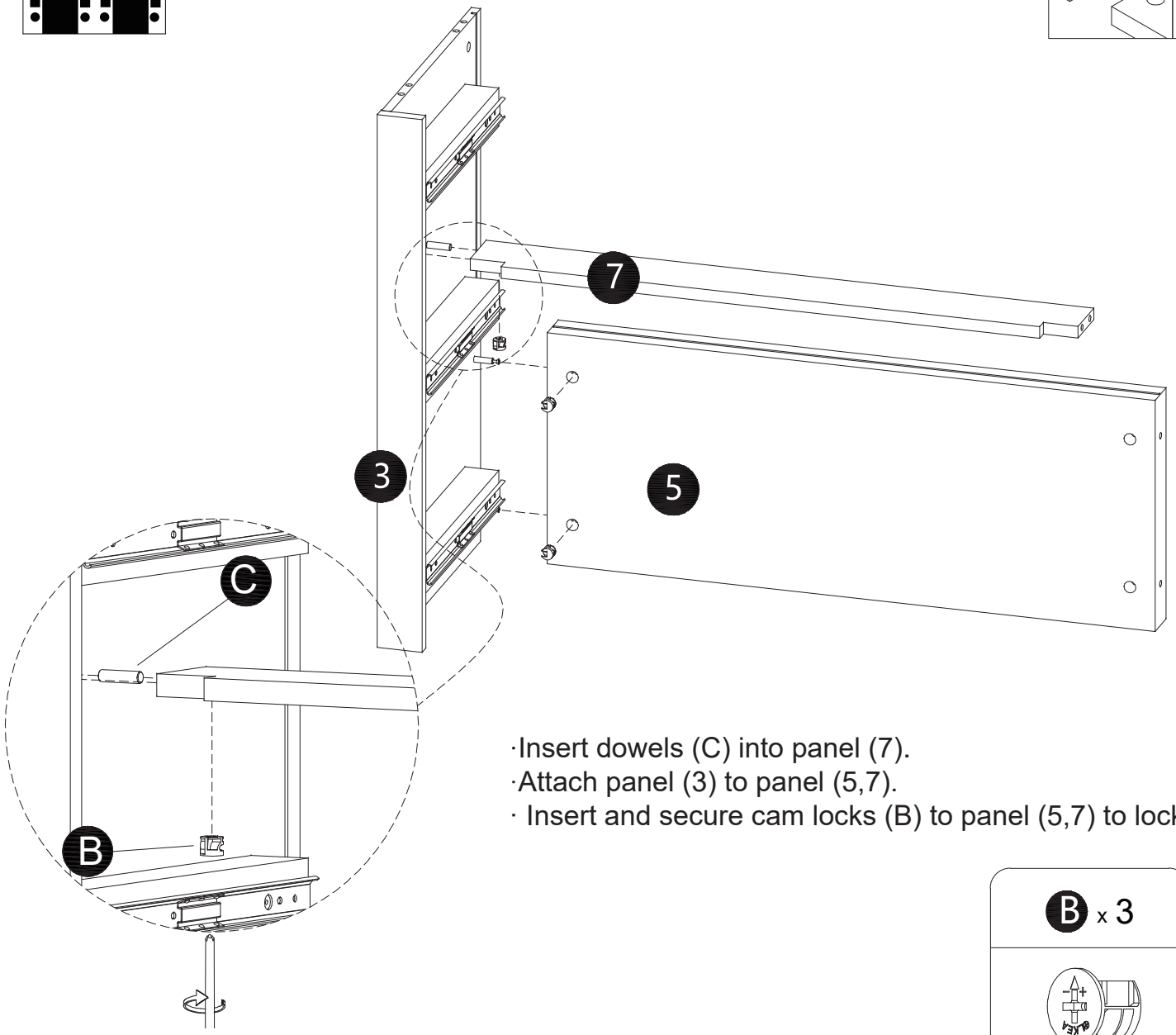

·Insert dowels (C) into panel (7).
·Attach panel (3) to panel (5,7).
· Insert and secure cam locks (B) to panel (5,7) to lock it.

B x 3	C x 1
	

5

INSTALLATION STEPS

2 Person Task

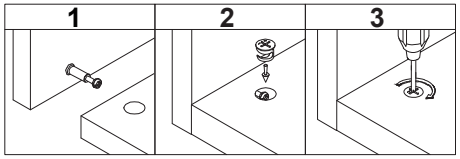

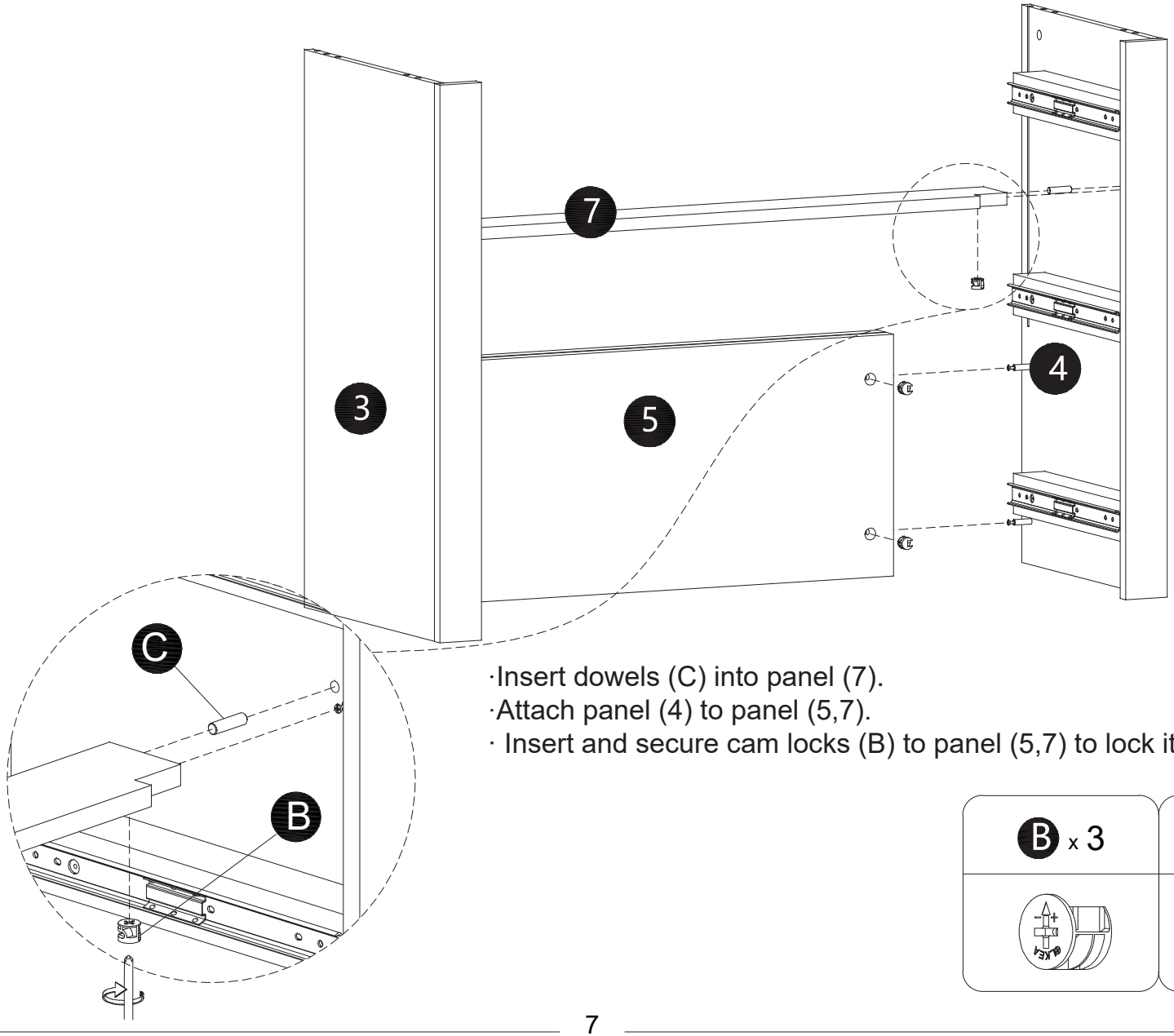

·Insert dowels (C) into panel (7).
·Attach panel (4) to panel (5,7).
· Insert and secure cam locks (B) to panel (5,7) to lock it.

6

INSTALLATION STEPS

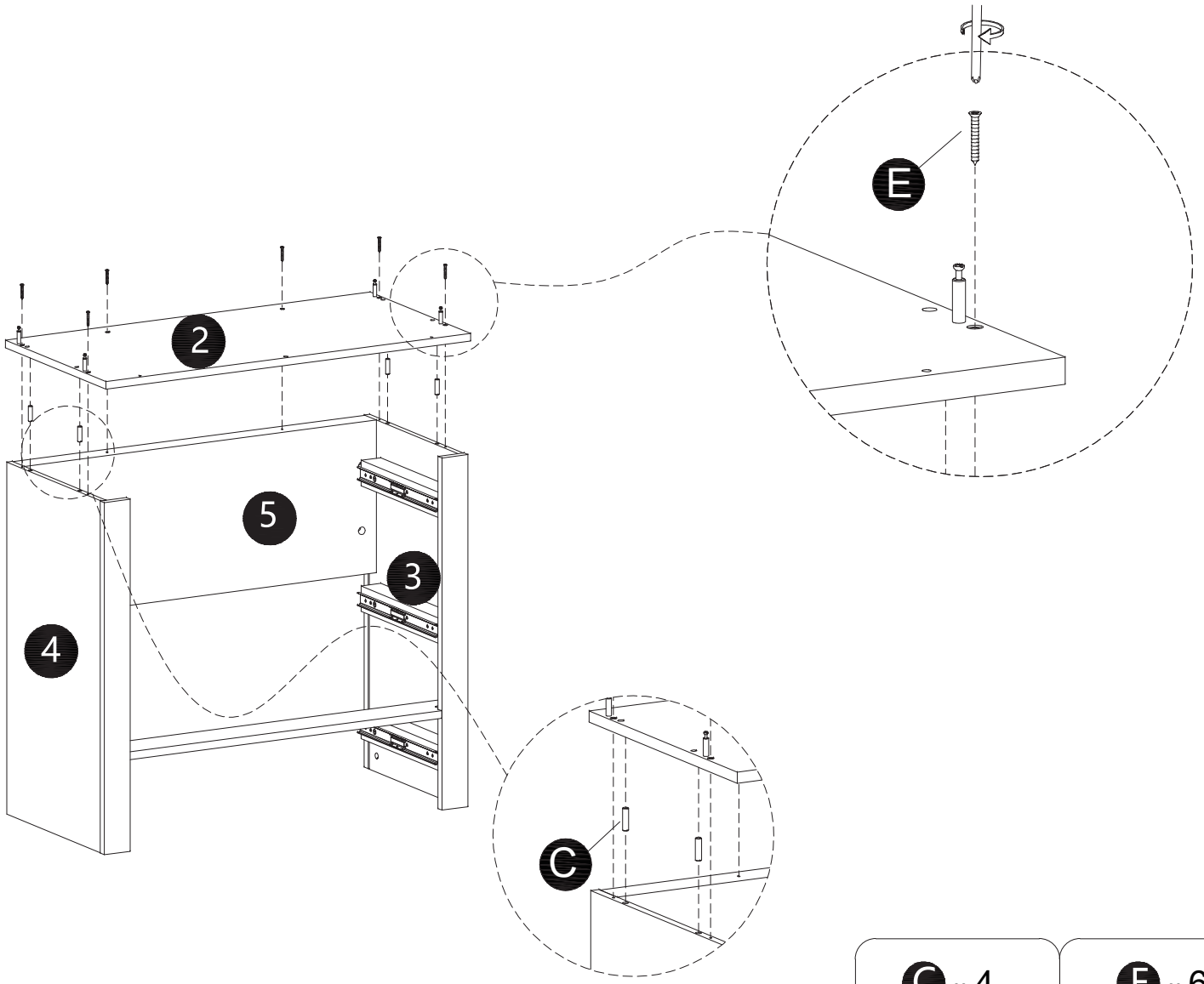

·Insert dowels (C) into panel (3,4).
·Attach panel (2) to panel (3,4,5)with screws(E).

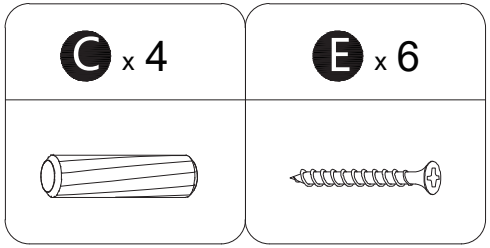

7

INSTALLATION STEPS

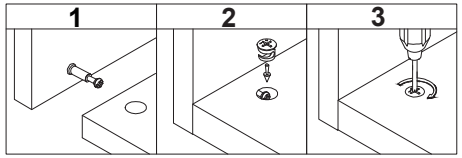

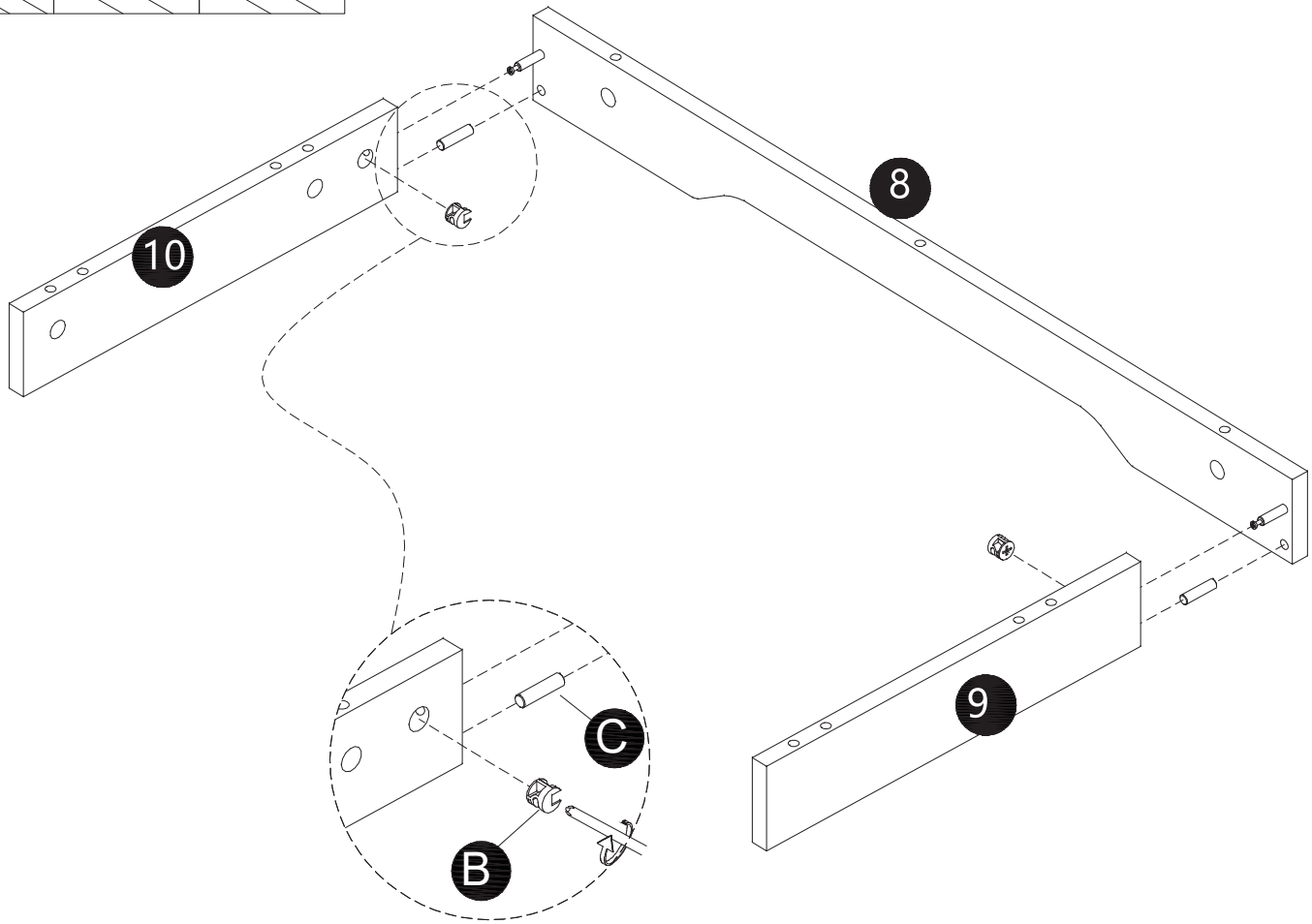

·Insert dowels (C) into panels (9,10).
·Attach panel (8) to panels (9,10).
· Insert and secure cam locks (B) to panels (9,10) to lock it.

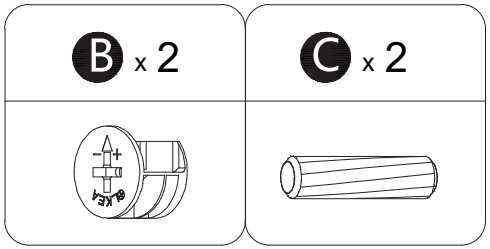

8

INSTALLATION STEPS

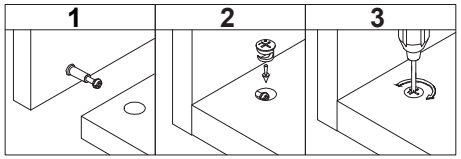

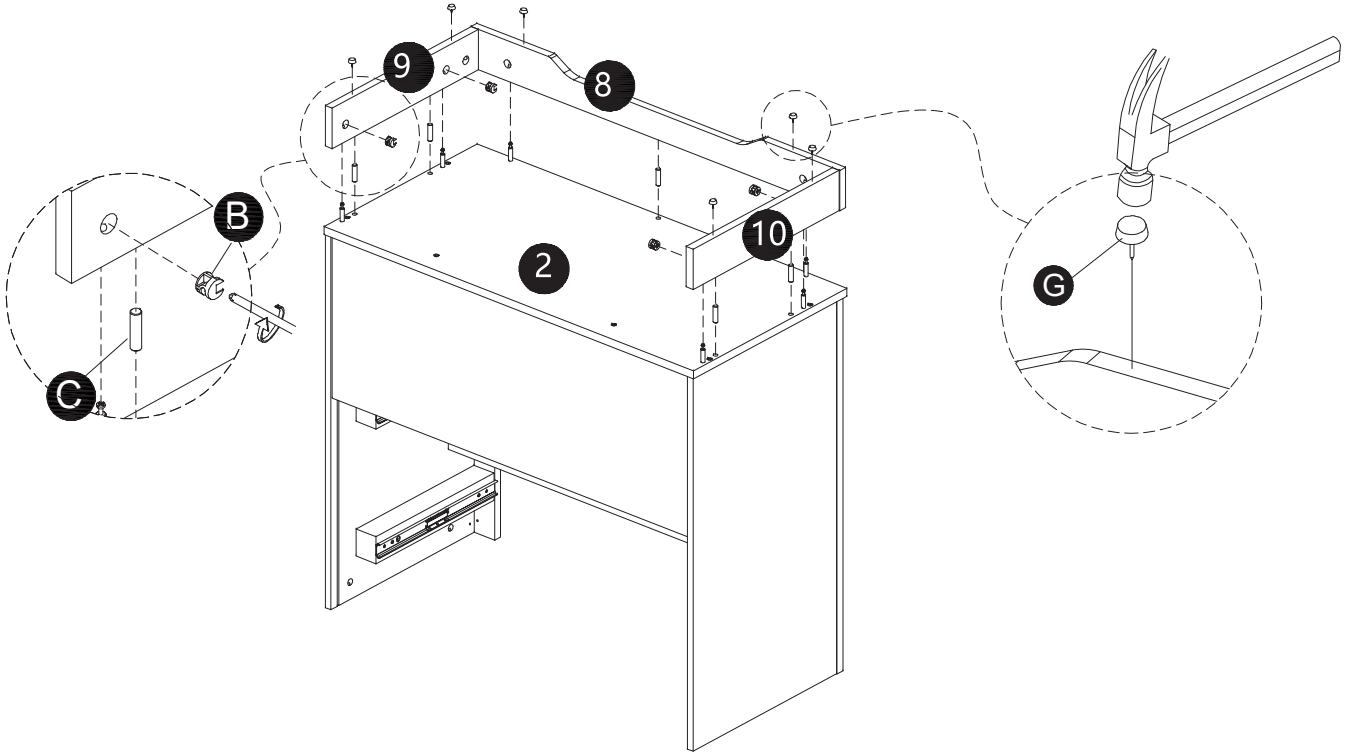

· Insert dowels (C) into panel (2).
· Attach panels (8,9,10) to part (2).
· Insert and secure cam locks (B) to panels (8,9,10) to lock it.
· Knock pins (G) into panels (8,9,10).

B x 6	C x 5	G x 6
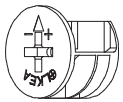		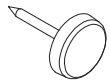

9 INSTALLATION STEPS

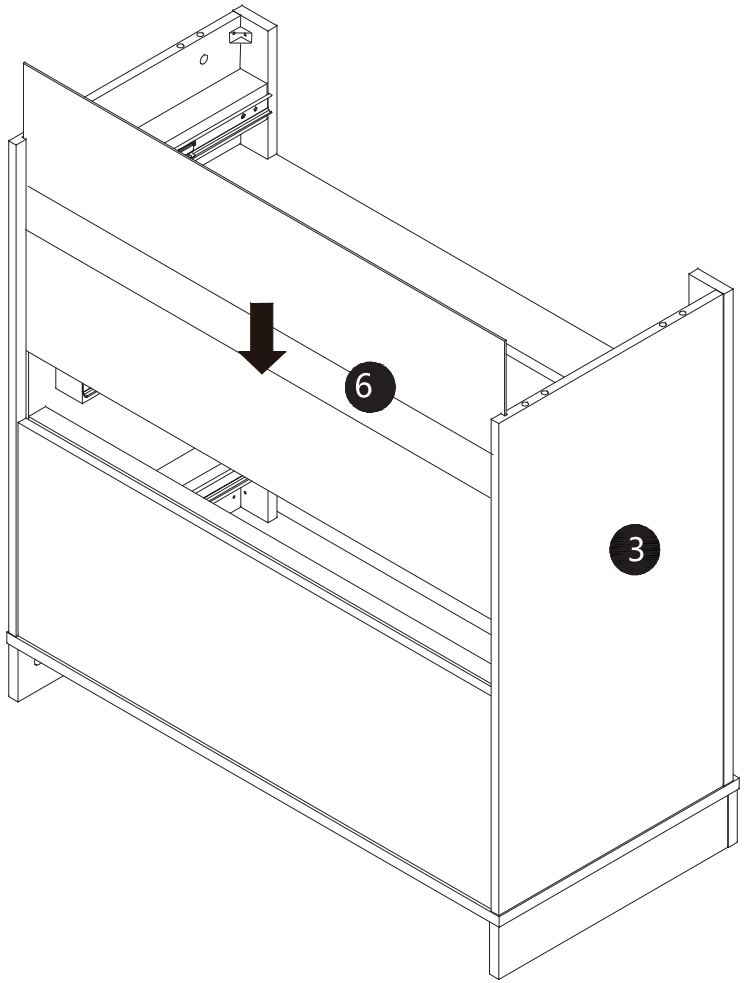

· Carefully slide part (6) into place along the back of the assembly.

10

INSTALLATION STEPS

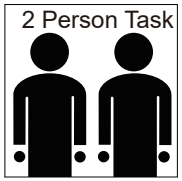

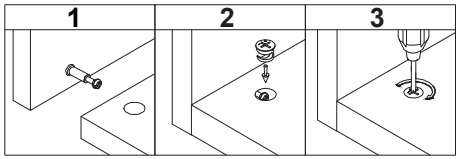

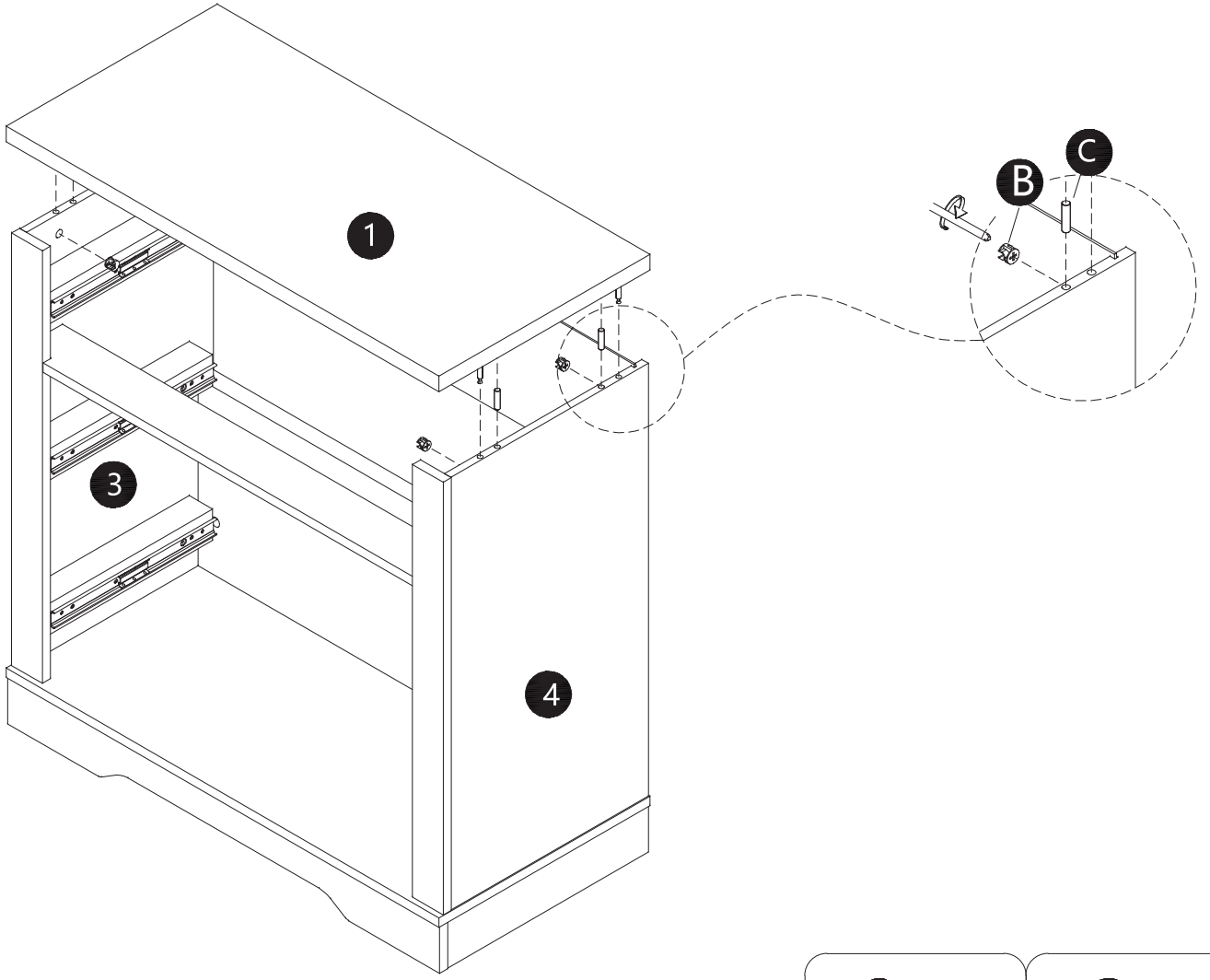

· Insert dowels (C) into panels (3,4).
· Attach panel (1) to panels (3,4).
· Insert and secure cam locks (B) to panels (3,4) to lock it.

C x 4	B x 4
	

11

INSTALLATION STEPS

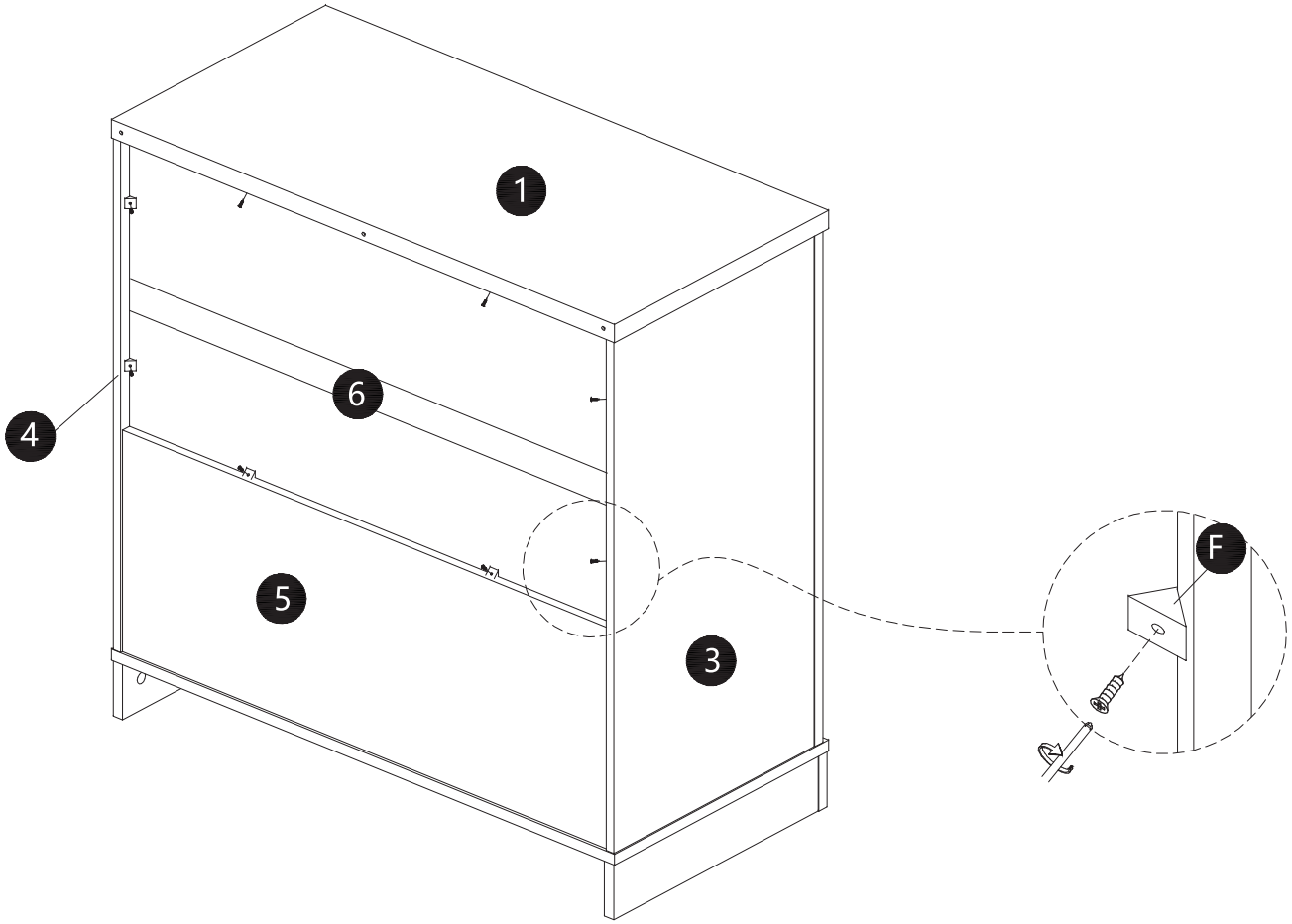

.Secure parts(F) to panels(1,3,4,5).

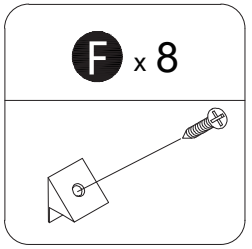

12

INSTALLATION STEPS

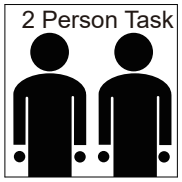

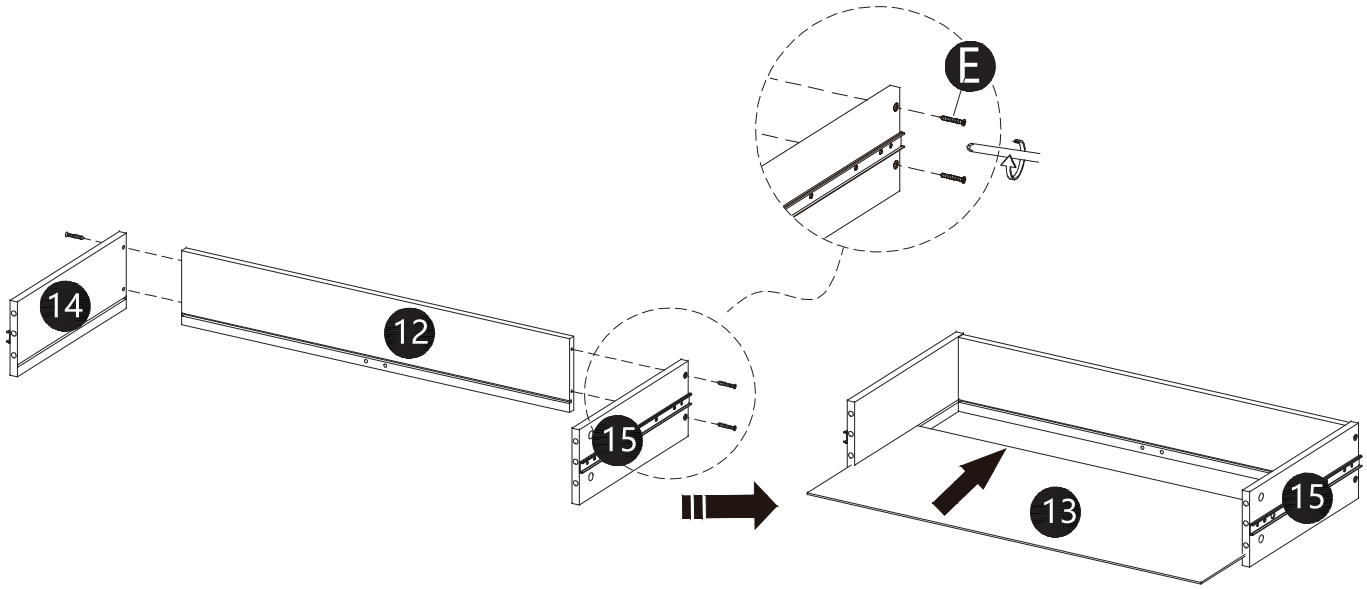

· Attach panels (14,15) to panel (12) with screws (E).
· Carefully slide panel (13) into place along the bottom of the assembly.

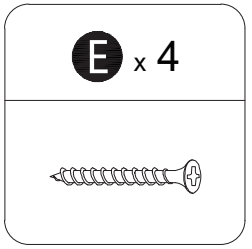

13

INSTALLATION STEPS

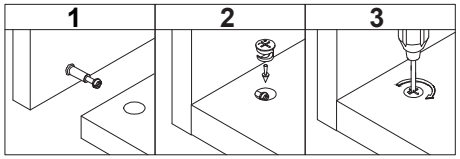

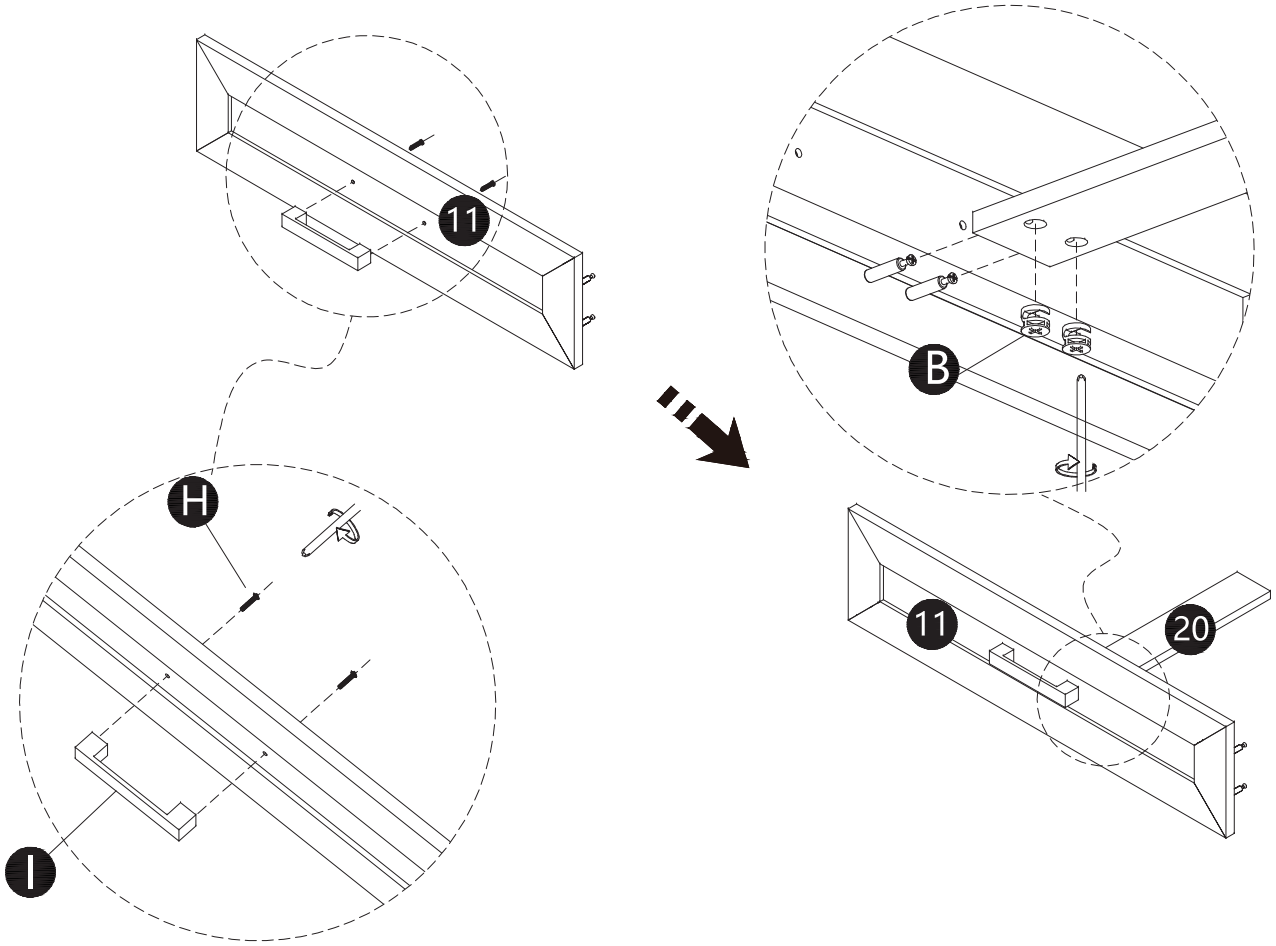

· Attach part (I) to panel (11) with screws (H).
· Attach part (11) to panel (20).
· Insert and secure cam locks (B) to panel (20) to lock it.

I x 1	H x 2	B x 2
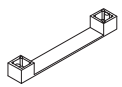	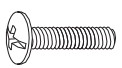	

14

INSTALLATION STEPS

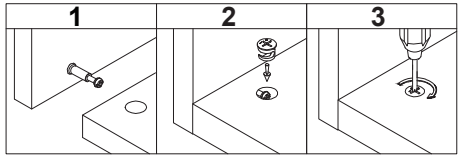

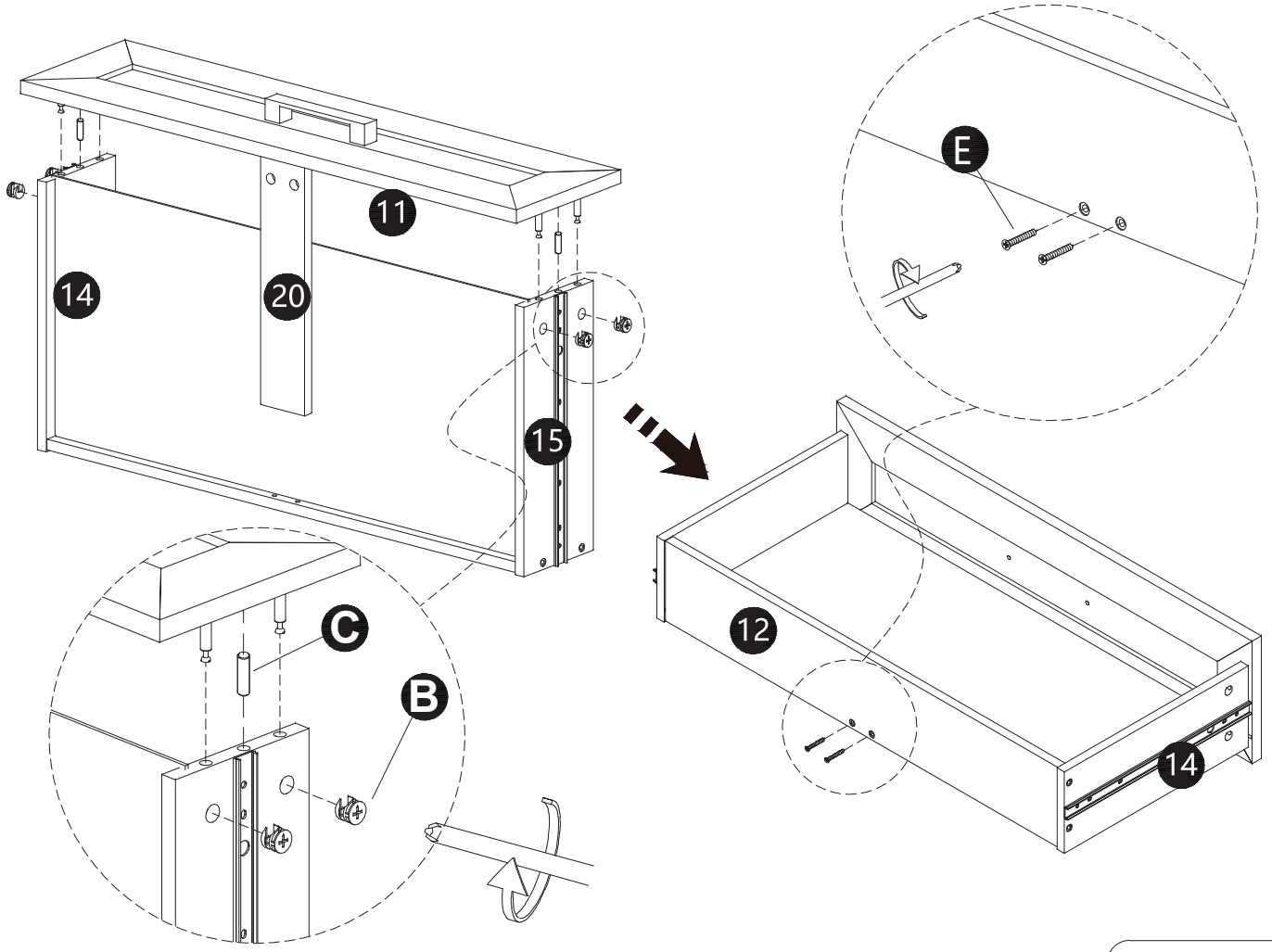

· Insert dowel (C) into panels (14,15).
· Attach part (11) to panels (14,15).
· Insert and secure cam locks (B) to panels (14,15) to lock it.
·Attach panel (20) to panel (12) with screws (E).

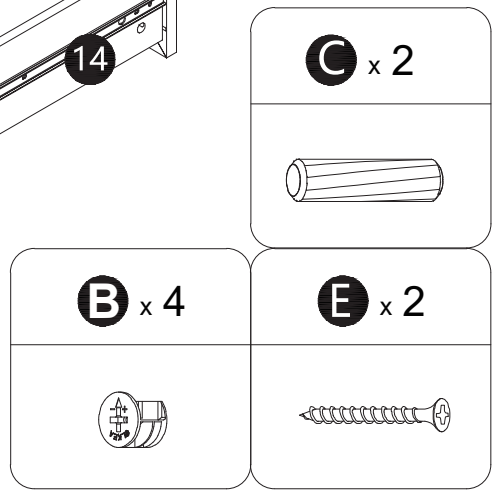

15

INSTALLATION STEPS

2 Person Task

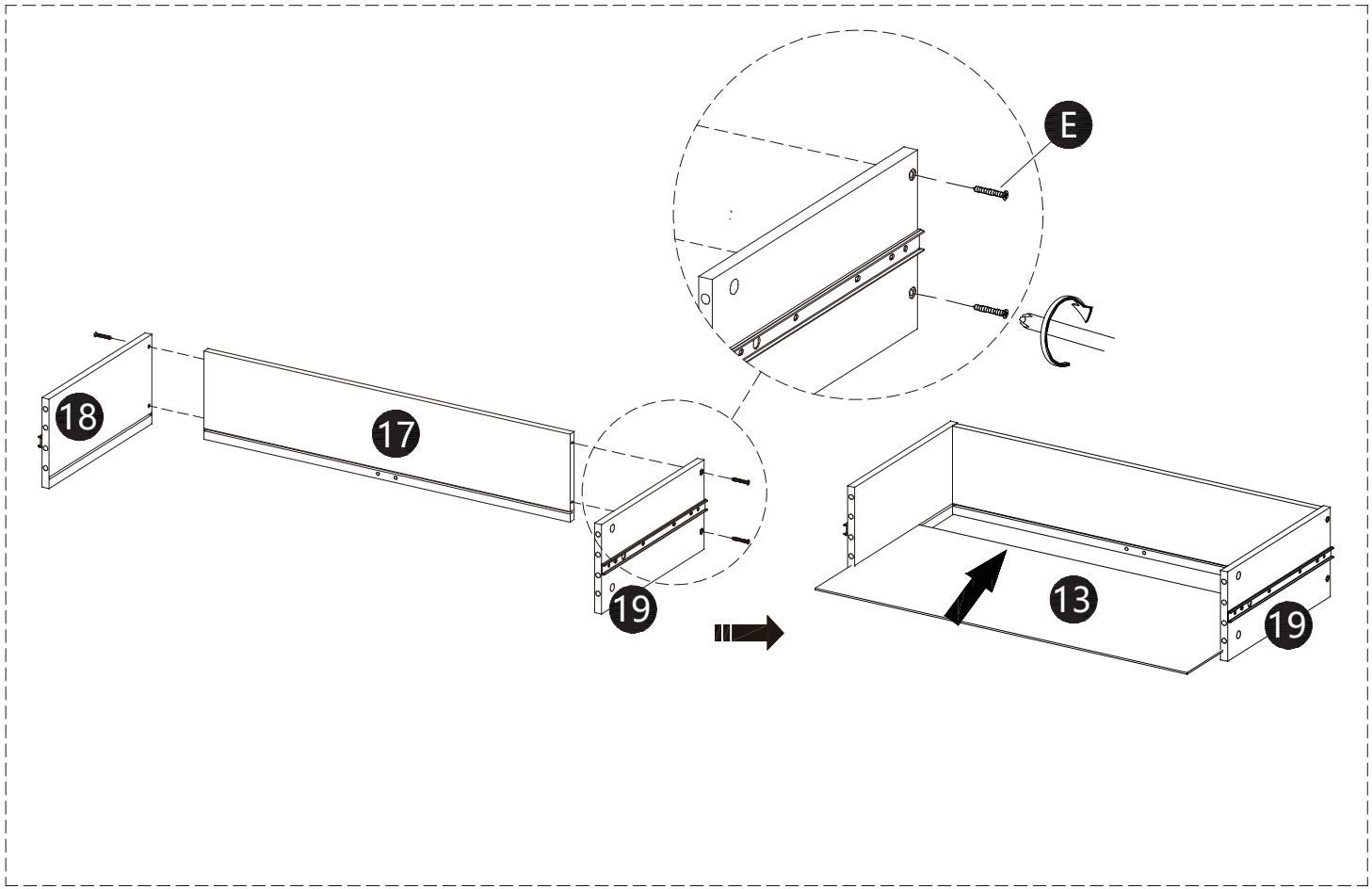

x 2

· Attach panels (18,19) to panel (17) with screws (E).
· Carefully slide panel (13) into place along the bottom of the assembly.

E x 8



16

INSTALLATION STEPS

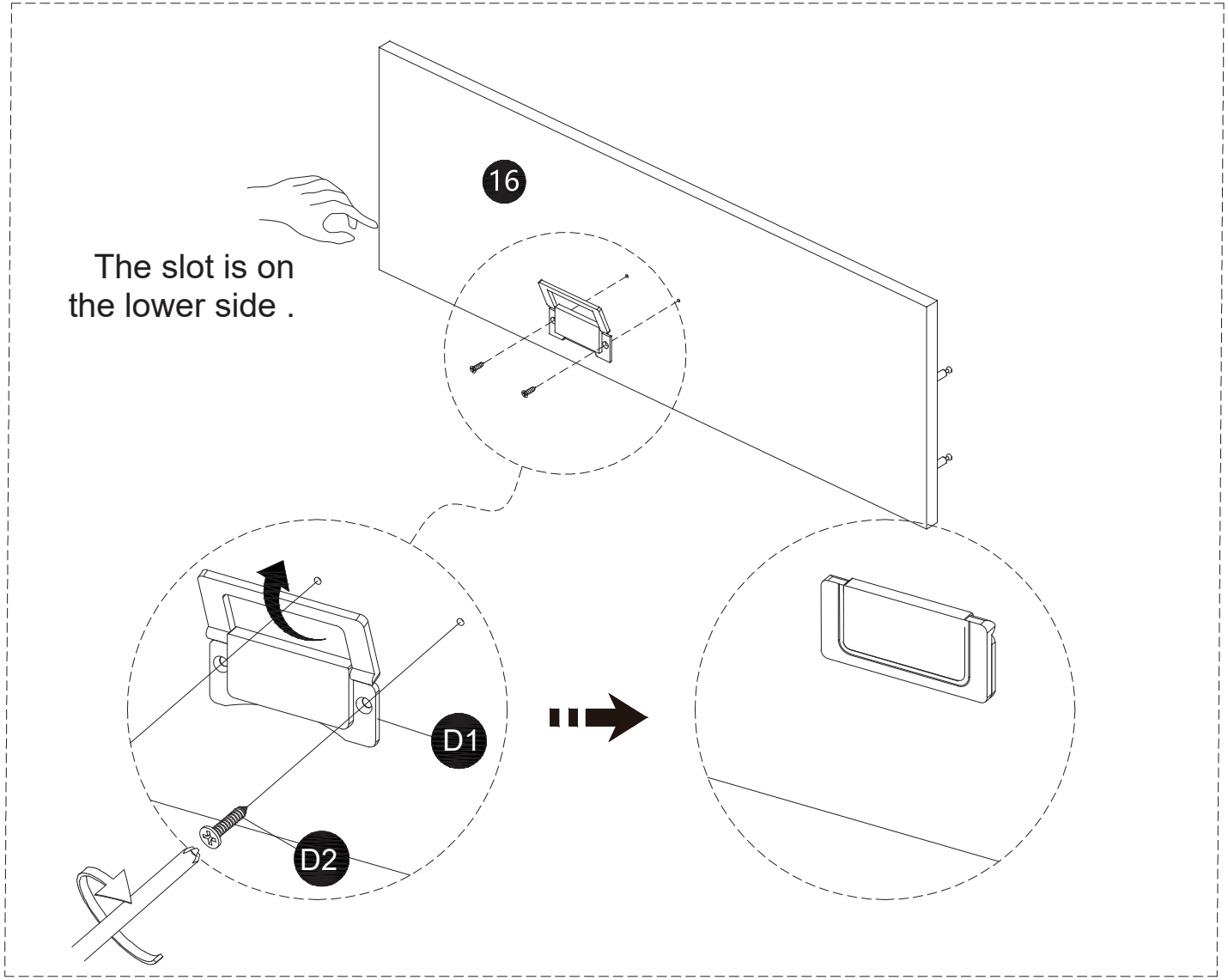

x 2

· Attach parts (D1) to panels (16) with screws (D2).

D x 2

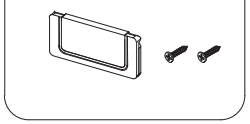

17

INSTALLATION STEPS

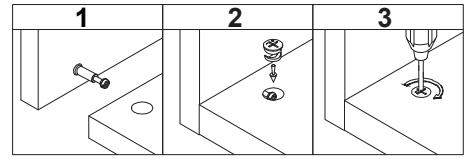

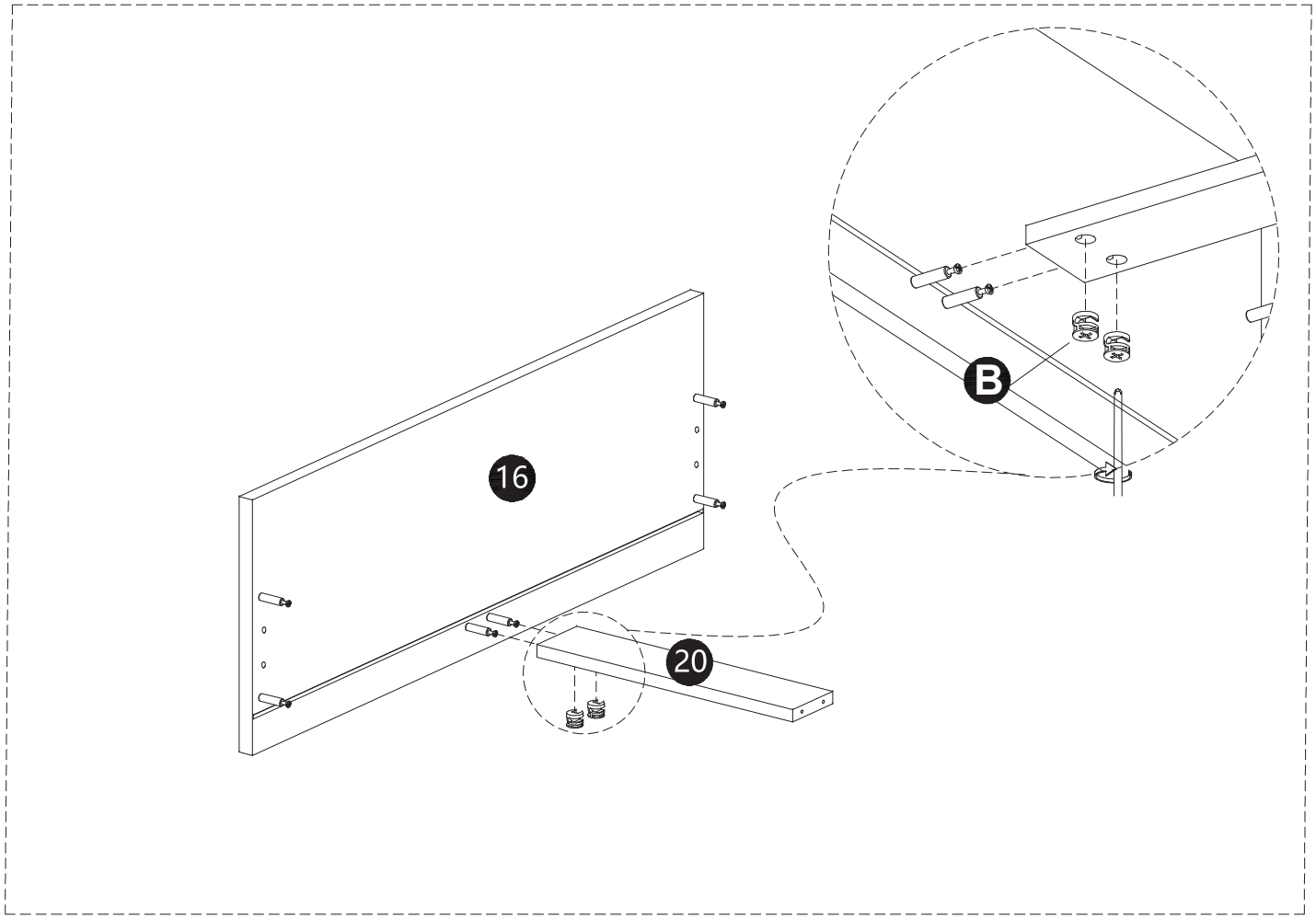

x2

· Attach parts (16) to panels (20).
· Insert and secure cam locks (B) to panels (20) to lock it.

B x 4



18

INSTALLATION STEPS

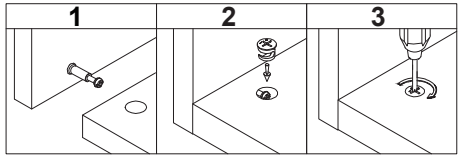

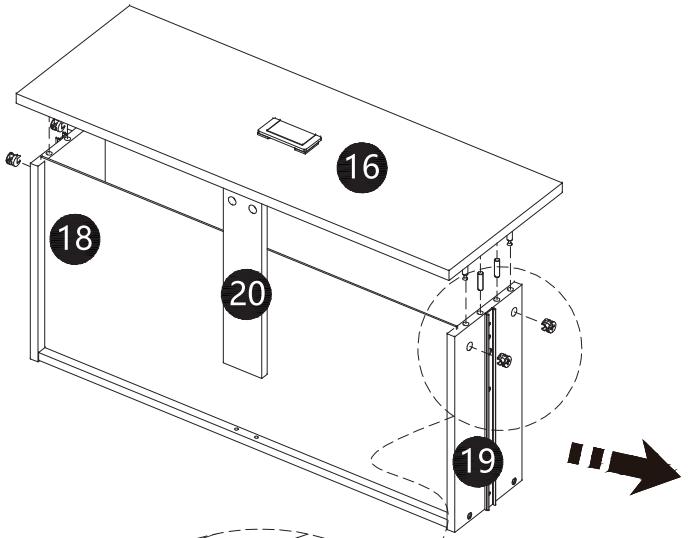

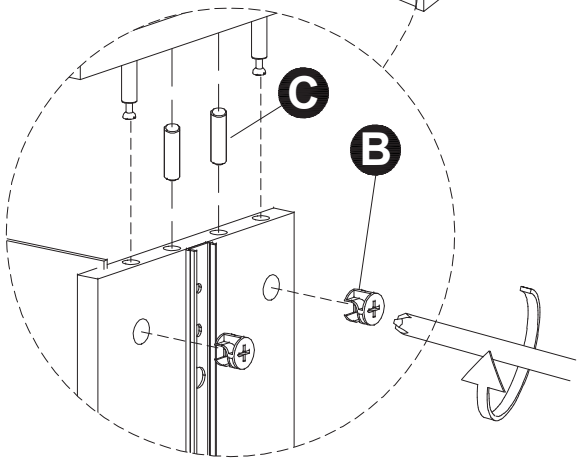

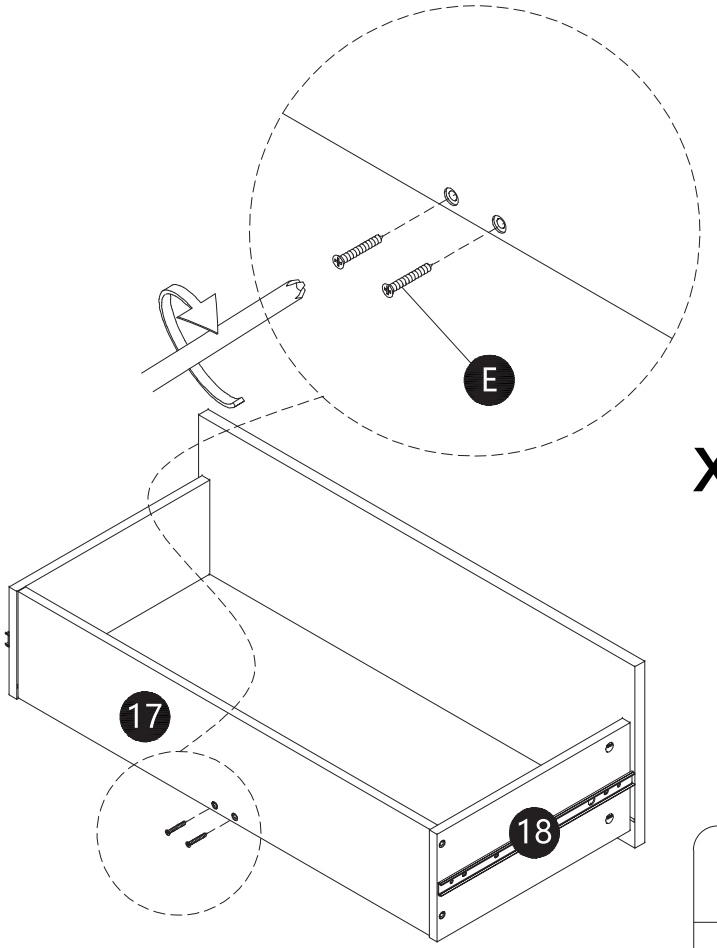

x 2

- Insert dowel (C) into panels (18,19).
- Attach panels (16) to panels (18,19).
- Insert and secure cam locks (B) to panels (18,19) to lock it.
- Attach panels (20) to panels (17) with screws (E).

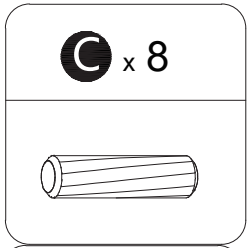

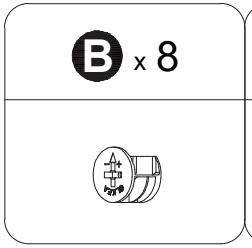

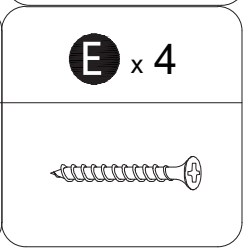

19

INSTALLATION STEPS

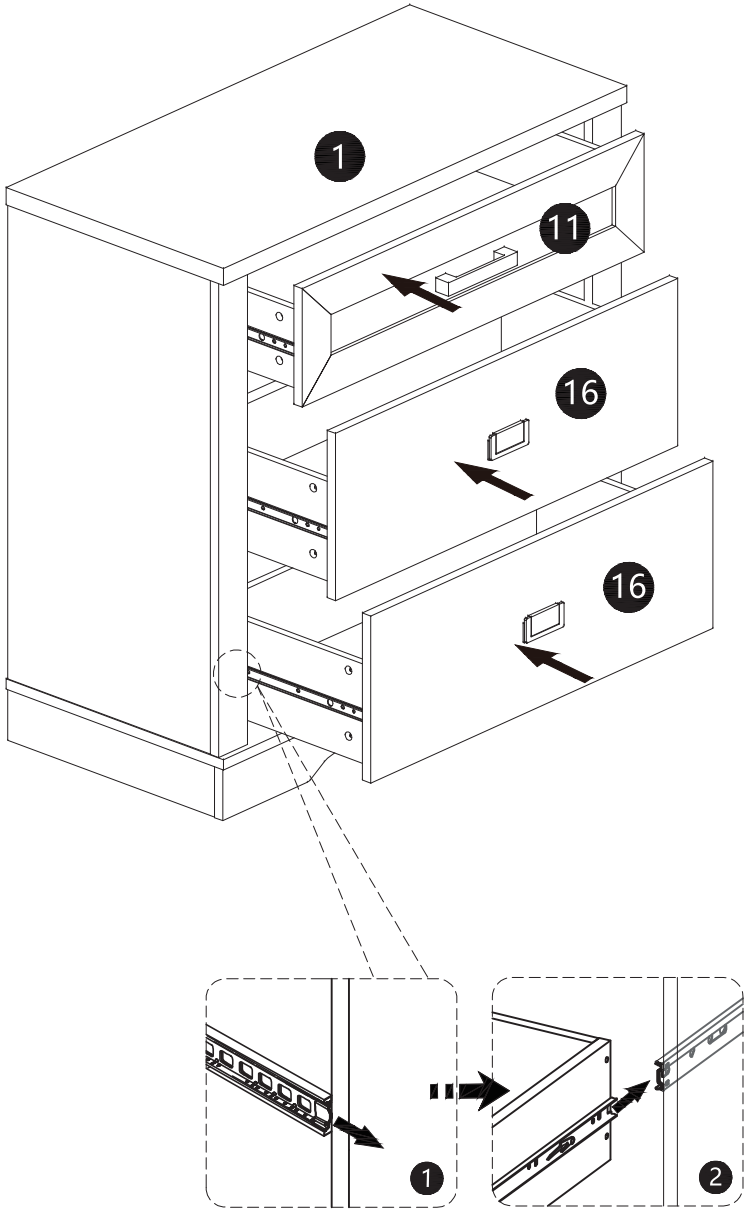

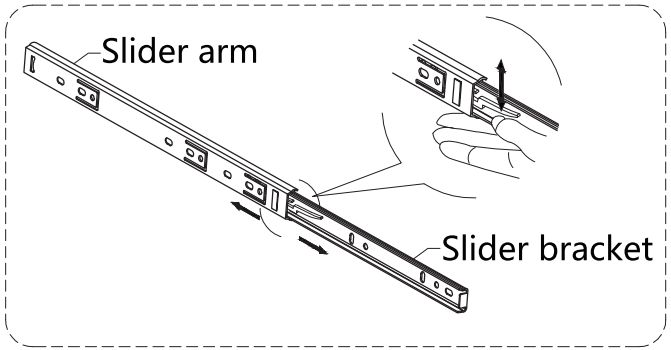

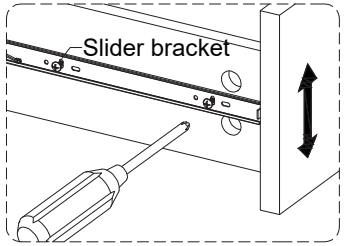

Adjust Height / 高さを調節

.Assemble the drawers as per diagram
Note :
If the drawer does not go in smoothly.
Press or lift the plastic release lever.
Pull out the slider bracket from
the slider arm.
Loosen the screws on slider brackets,
You can adjust up or down by a few mm.
Then tighten back up.
Finally re-assembled the drawer until
they were going in smoothly well.

20

INSTALLATION STEPS

WARNING

Serious or fatal injuries can occur from furniture tipping over. To prevent the furniture from tipping over we recommend that it is permanently fixed to the wall. Wall anchor and hardware are included with this product. Please make sure hardware is suitable for your walls before installing, as different wall materials may require different types of anchors.

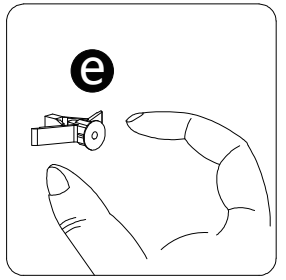

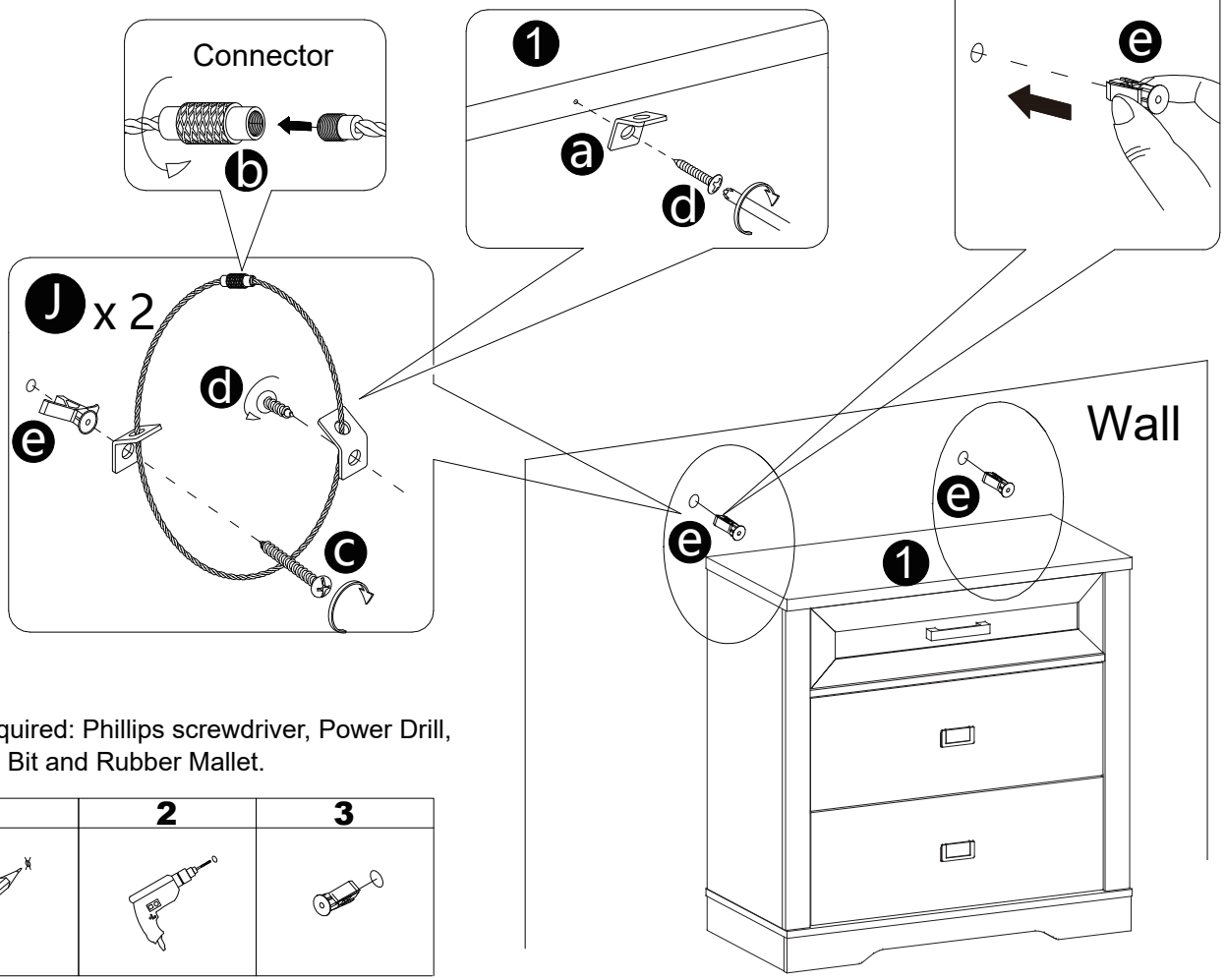

Tools required: Phillips screwdriver, Power Drill, 2/5” Drill Bit and Rubber Mallet.

1	2	3
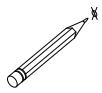		

21

INSTALLATION STEPS

Final Assembly

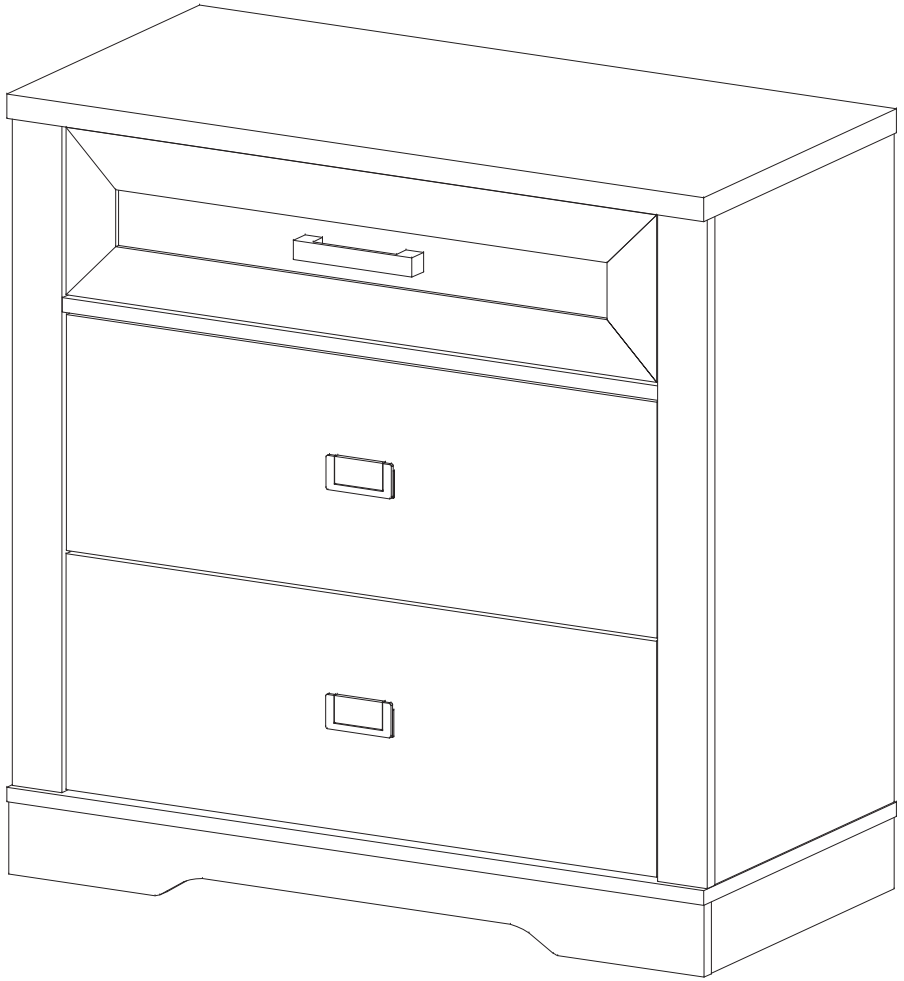

Warning:
Please lift and move with two people, do not drag.