ASSEMBLY INSTRUCTIONS

Read this instruction carefully. See hardware and furniture part list for guidance.
Be sure all parts are complete, before you assemble. Place all wooden furniture parts on a clean and flat soft surface to prevent from being scratched.
Follow the figure to start assembling.

CAUTION : 1. Do not FULLY - TIGHTEN the nuts or nuts bolts until they are ready for assembly.
2. Do not OVER - TIGHTEN the nuts or bolts to avoid causing damages to the thread.
3. Keep all hardware parts out of reach of children.

NOTE : THE LIST AND QUANTITY SHOWN ARE FOR 1 UNIT ASSEMBLY.
Tools needed : Screwdriver (not provided).

PART LIST

ITEM	DESCRIPTION	BOX	QTY
A	HEADBOARD	1	1 PC
B	FOOTBOARD	2	1 PC
C	SIDE RAIL	2	2 PCS
D	CENTER RAIL	2	2 PCS
E	CENTER SUPPORT LEG	2	6 PCS
F	CENTER SUPPORT	2	3 PCS
G	BED SLAT	2	39 PCS

HARDWARE LIST (BOX : 2)

ITEM	DESCRIPTION	QTY
1	WOOD SCREW M4 x 20mm	4 PCS
2	WOOD SCREW M3.5 x 16mm	12 PCS
3	M5 ALLEN KEY (BALL SHAPE)	1 PC
4	BED SLAT SIDE FITTER	26 PCS
5	BED SLAT CENTER FITTER	26 PCS

STEP 1

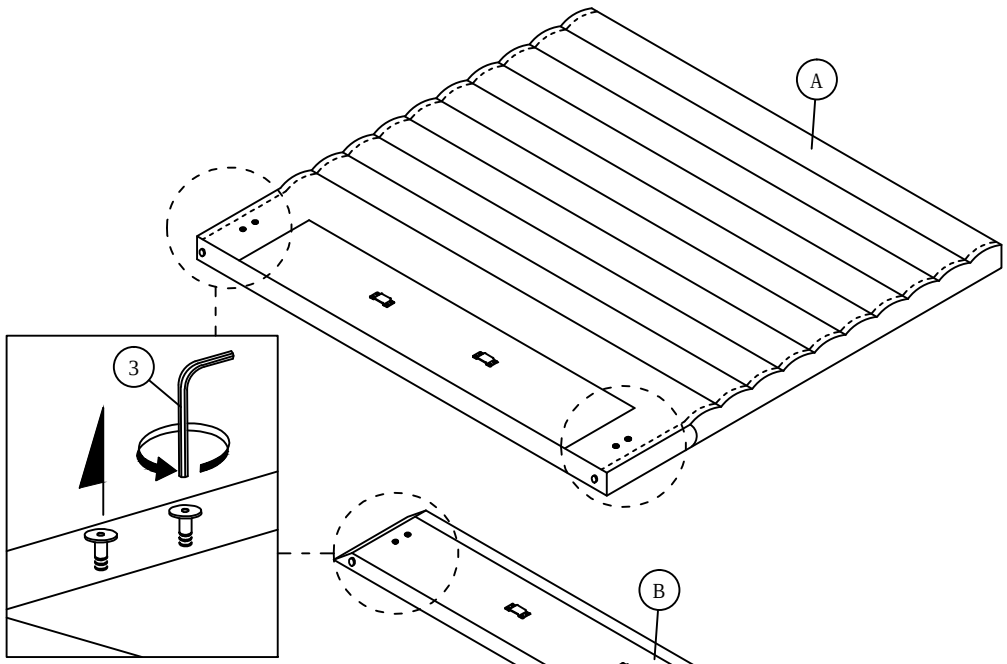

Loosen the pre-inserted bolt on the headboard and footboard using Allen key ball shape (3).

STEP 2

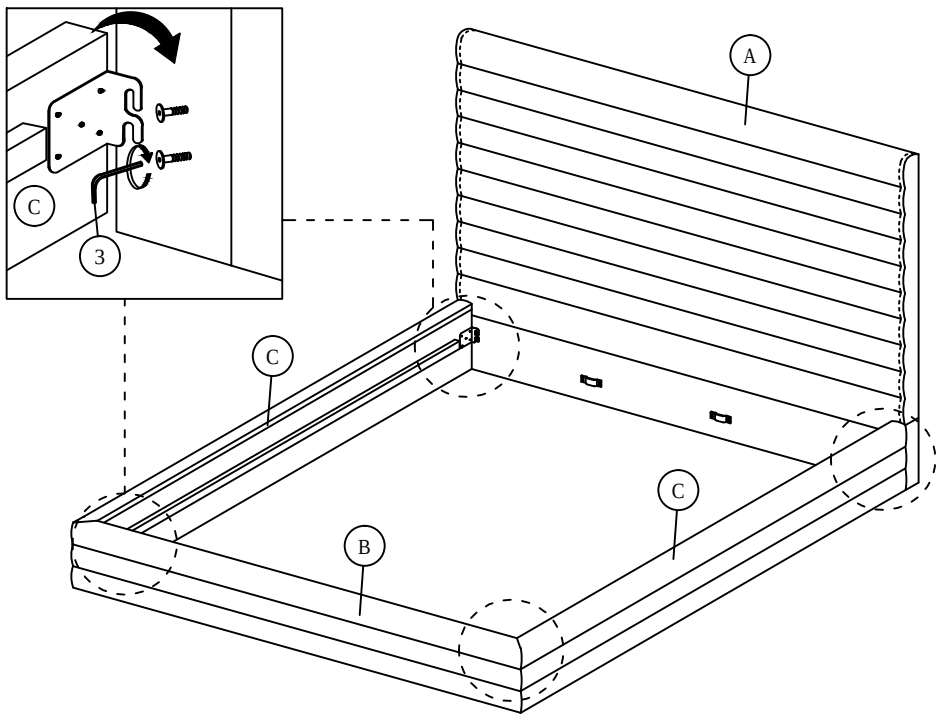

ASSEMBLY INSTRUCTIONS

STEP 3

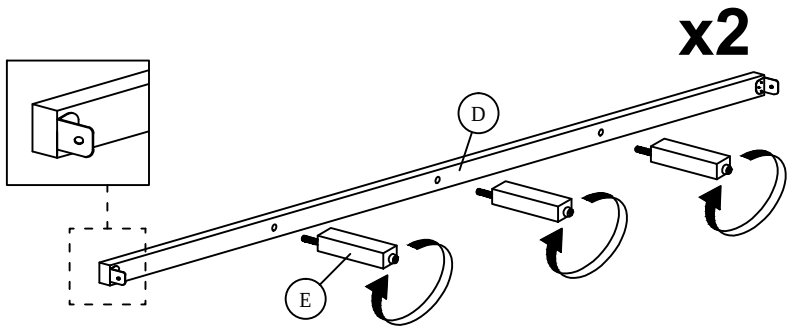

STEP 4

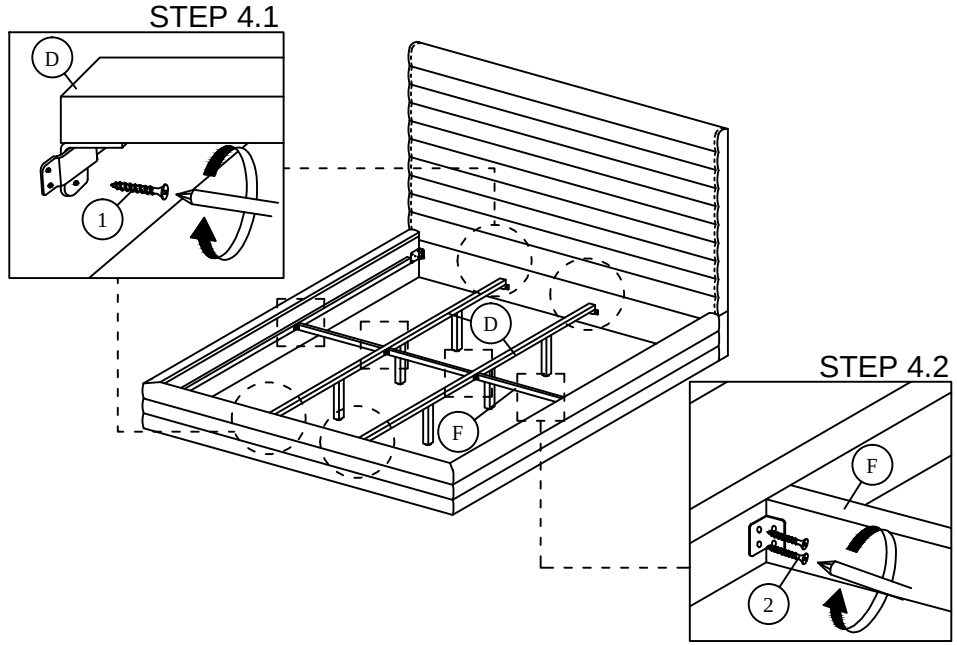

STEP 5

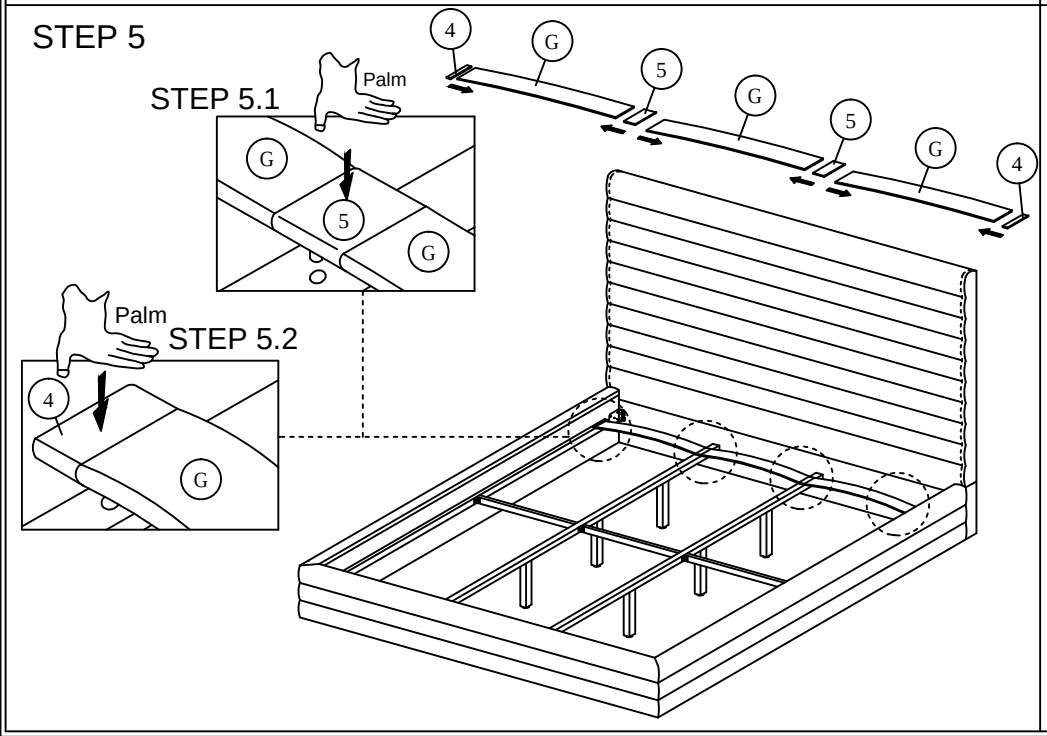

STEP 6

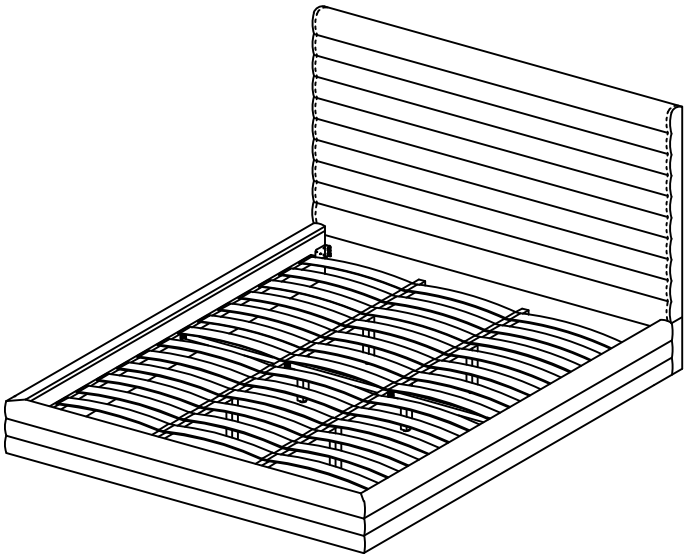

* When moving the bed position, the center support legs must be adjust to be straight to avoid any broken problem.