Installation Instruction

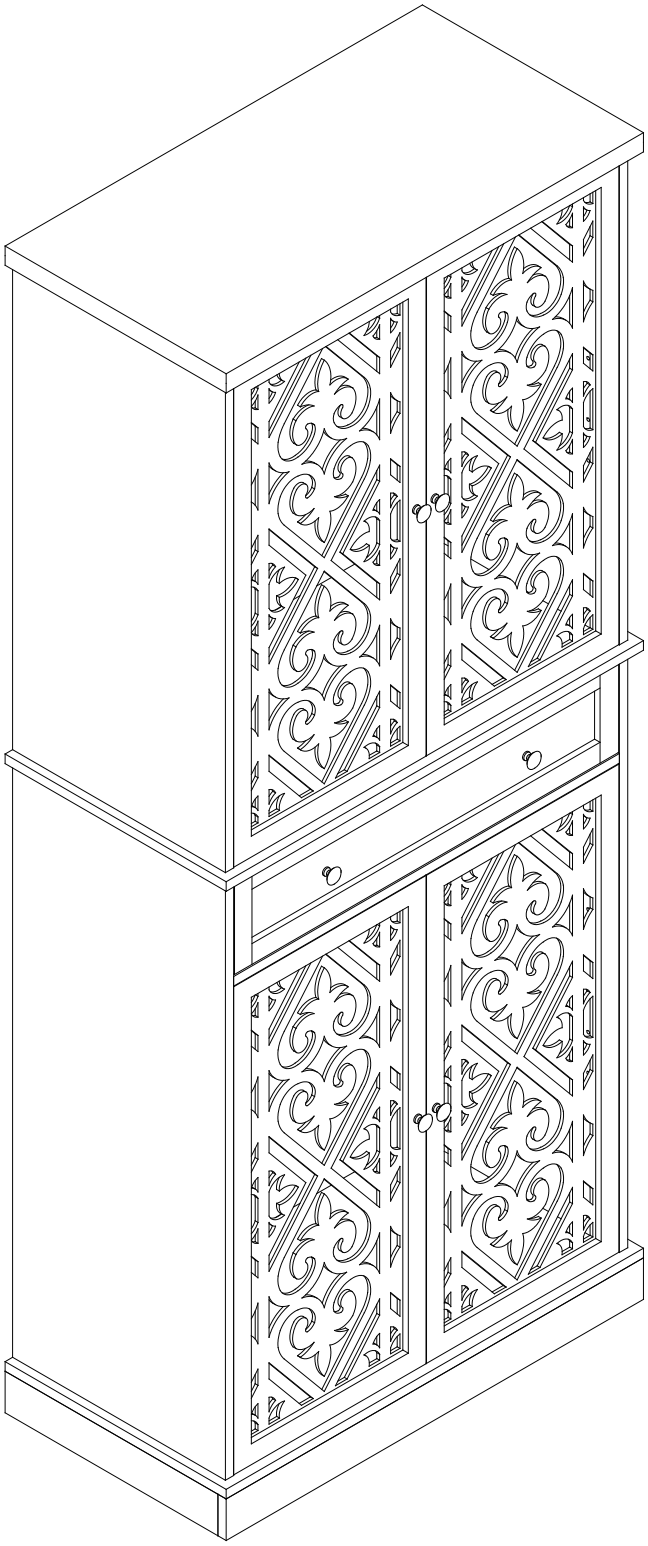

Product name

4 Door High Cabinet

Assembling

What you need

- Use the packaging carton as a working surface to prevent product damage during assembly
- Phillips head screwdriver

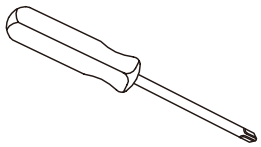

Weight Limitation

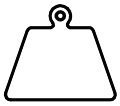

60 | 11

lbs cabinet top lbs per drawer

22

lbs per shelf

2 PERSONS

What ’s included

Code	Description	Qty
A	Cam Bolt M6X35MM	41
B	Cam Lock 15X10MM	41
C	Wooden Dowel M6X30MM	24
D	Screw M4X35MM	15
E	Handle	6
F	Hinge	12
G	Screw M4X14MM	2
H	Magnetic Door Catcher	4
I	Metal Support	16
J	Slide Sets	1
K	Screw M3X12MM	68
L	Plastic Corner Support	14
M	Screw M3X16MM	22
N	Metal Plate	2
O	Anchor M6X30MM	2
P	Door Metal Plate	8
Q	Bolt M4X22MM	4
R	Bolt M4X12MM	2

The Hardwares

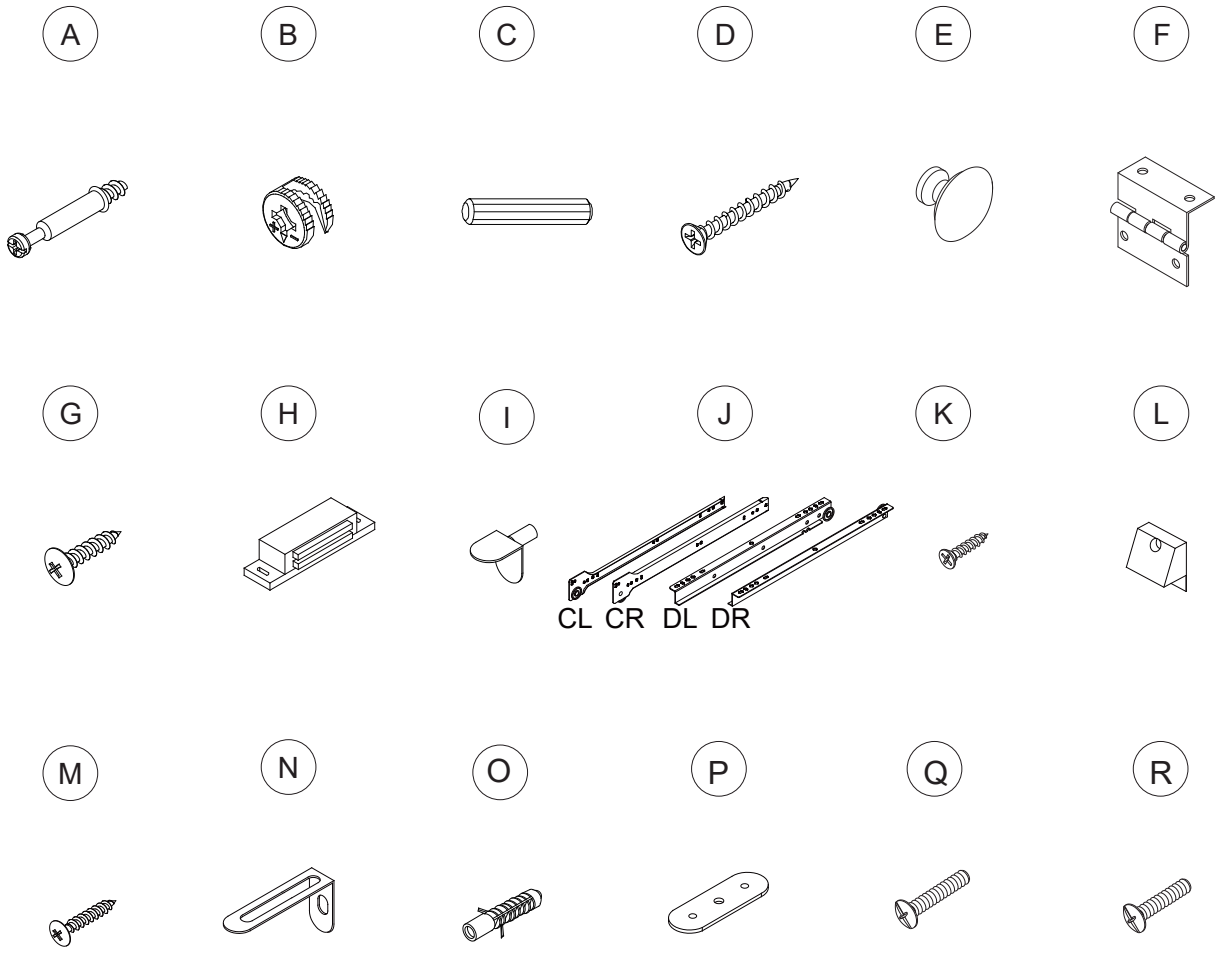

IMPORTANT :

1. Do not tighten bolts / screws completely until all bolts / screws are lined up and inserted into holes.
2. Do not over tighten screws and bolts to avoid stripping.
3. Please use hand tools to assemble this product. Do not use power tools.
4. Must need 2 people to assemble this product.

2 PERSONS

Included Accessories

Code	Description	Qty
1.	Cabinet Top	1
2.	Upper Bottom Panel	1
3.	Bottom Panel	1
4.	Upper Left Side Panel	1
5.	Upper Right Side Panel	1
6.	Bottom Left Side Panel	1
7.	Bottom Right Side Panel	1
8.	Back Stretcher	2
9.	Middle Back Stretcher	1
10.	Bottom Top Support Panel	1
11.	Upper Back Panel	2
12.	Bottom Back Panel	2
13.	Bottom Long Panel	2
14.	Bottom Short Panel	2
15.	Shelf	4
16	Upper Plastic Strip	1
17.	Drawer Front Panel	1
18.	Drawer Bottom Support Panel	1
19.	Drawer Back Panel	1
20.	Drawer Left Side Panel	1
21.	Drawer Right Side Panel	1
22.	Drawer Bottom Panel	1
23.	Door	4
24.	Bottom Plastic Strip	1

The Accessories

Noted :

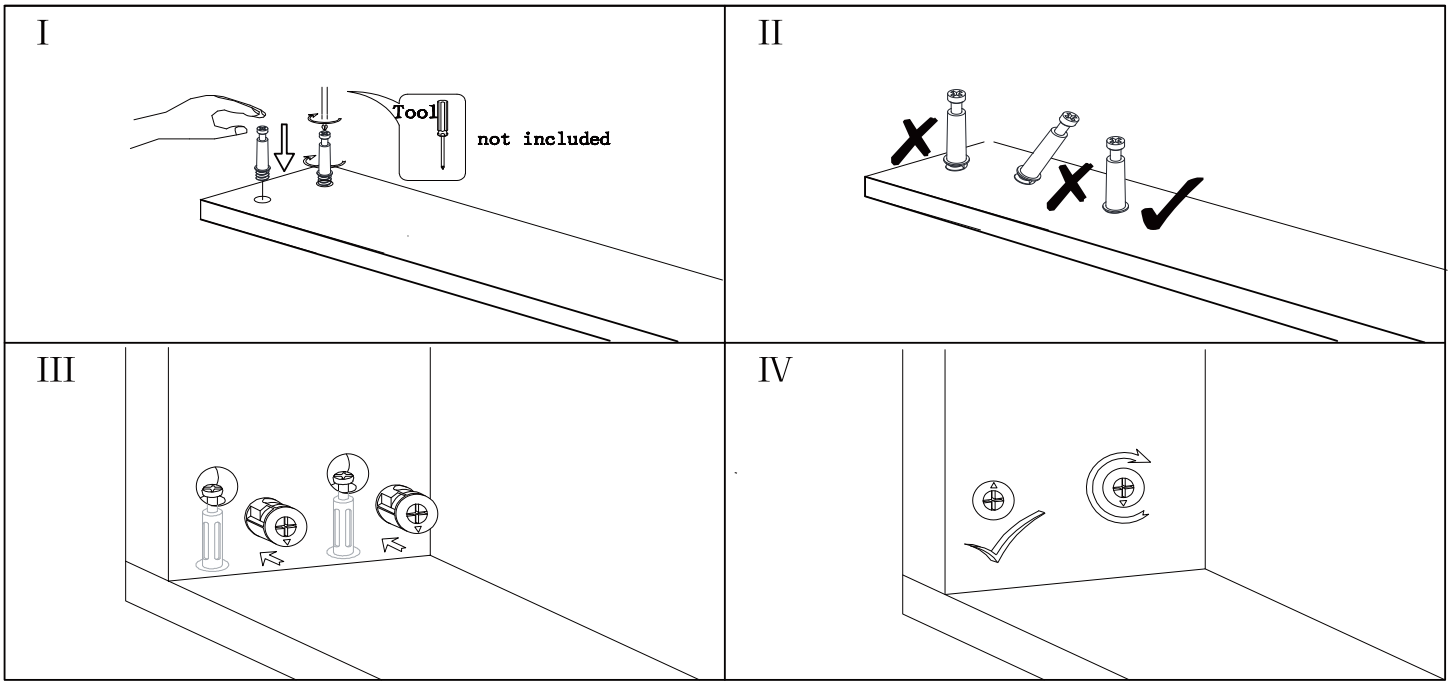

STEP 1

J(CL)	x 1

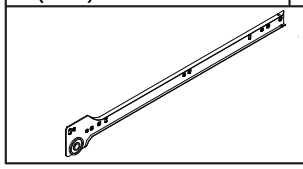

J(CR)	x 1

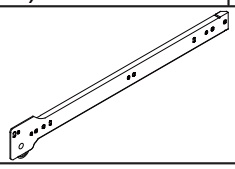

A	x12

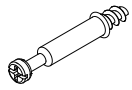

K	x 6

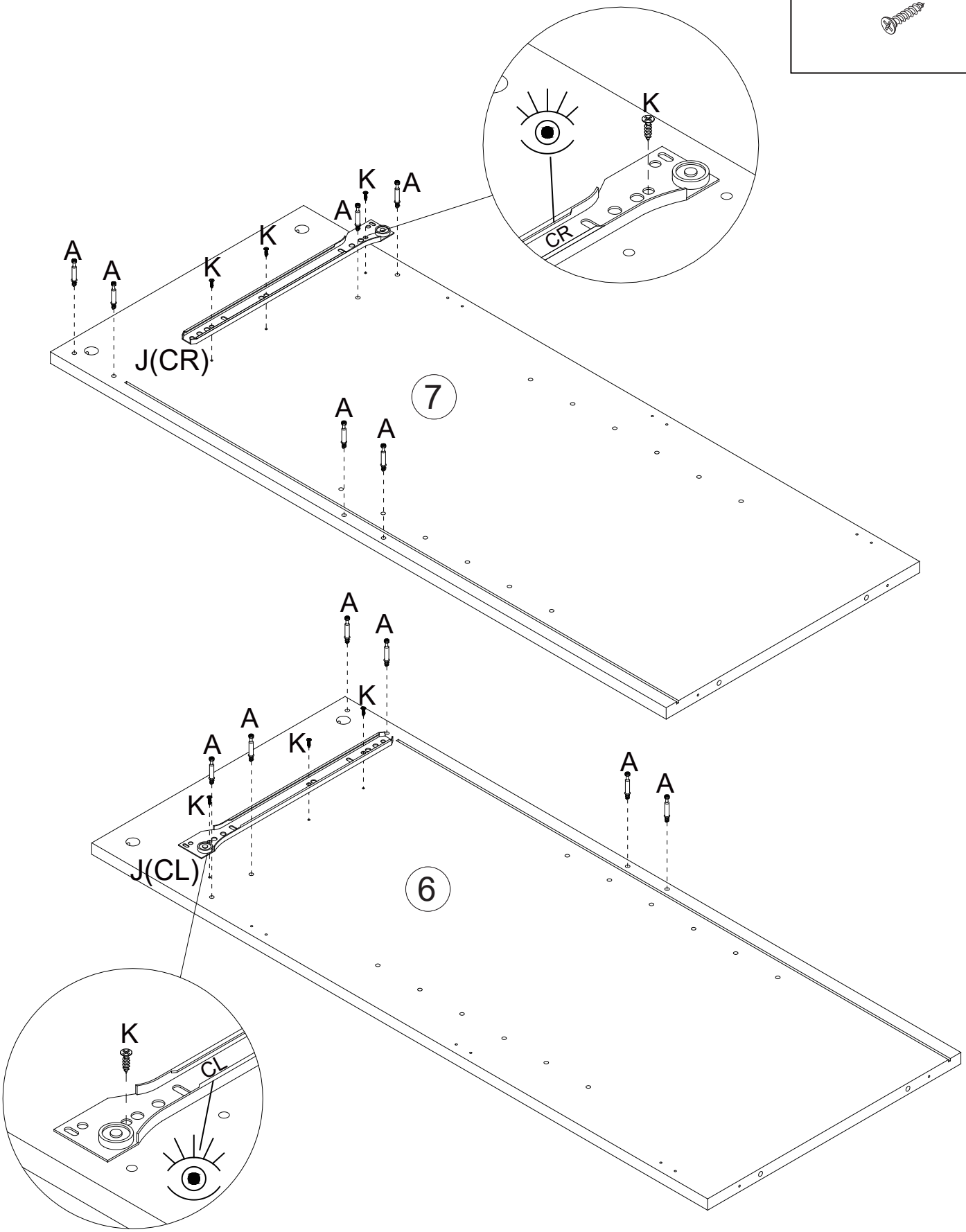

STEP 2

A	x4	H	x4	M	x8
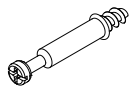		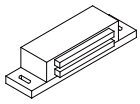			

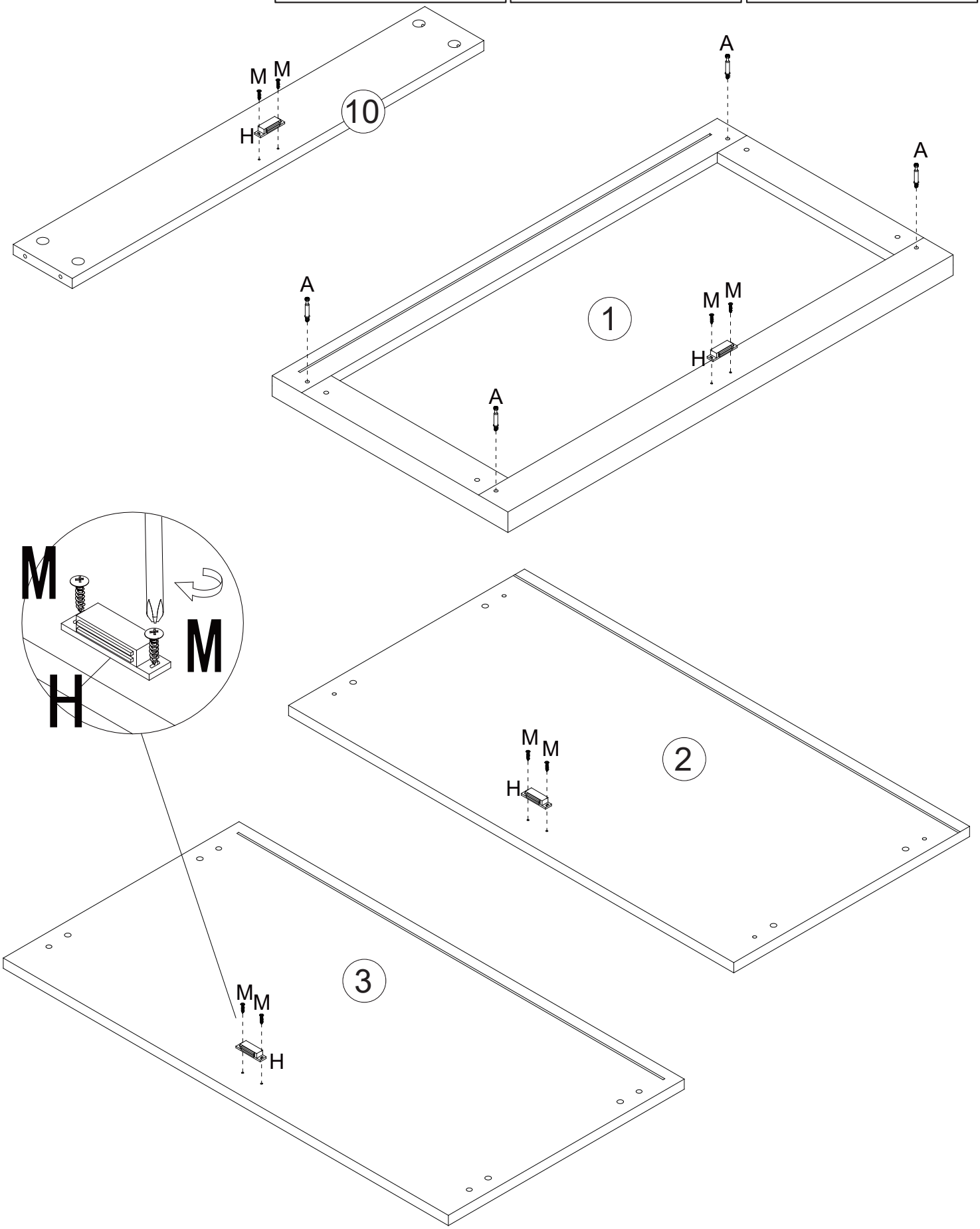

STEP 3

B	x 6

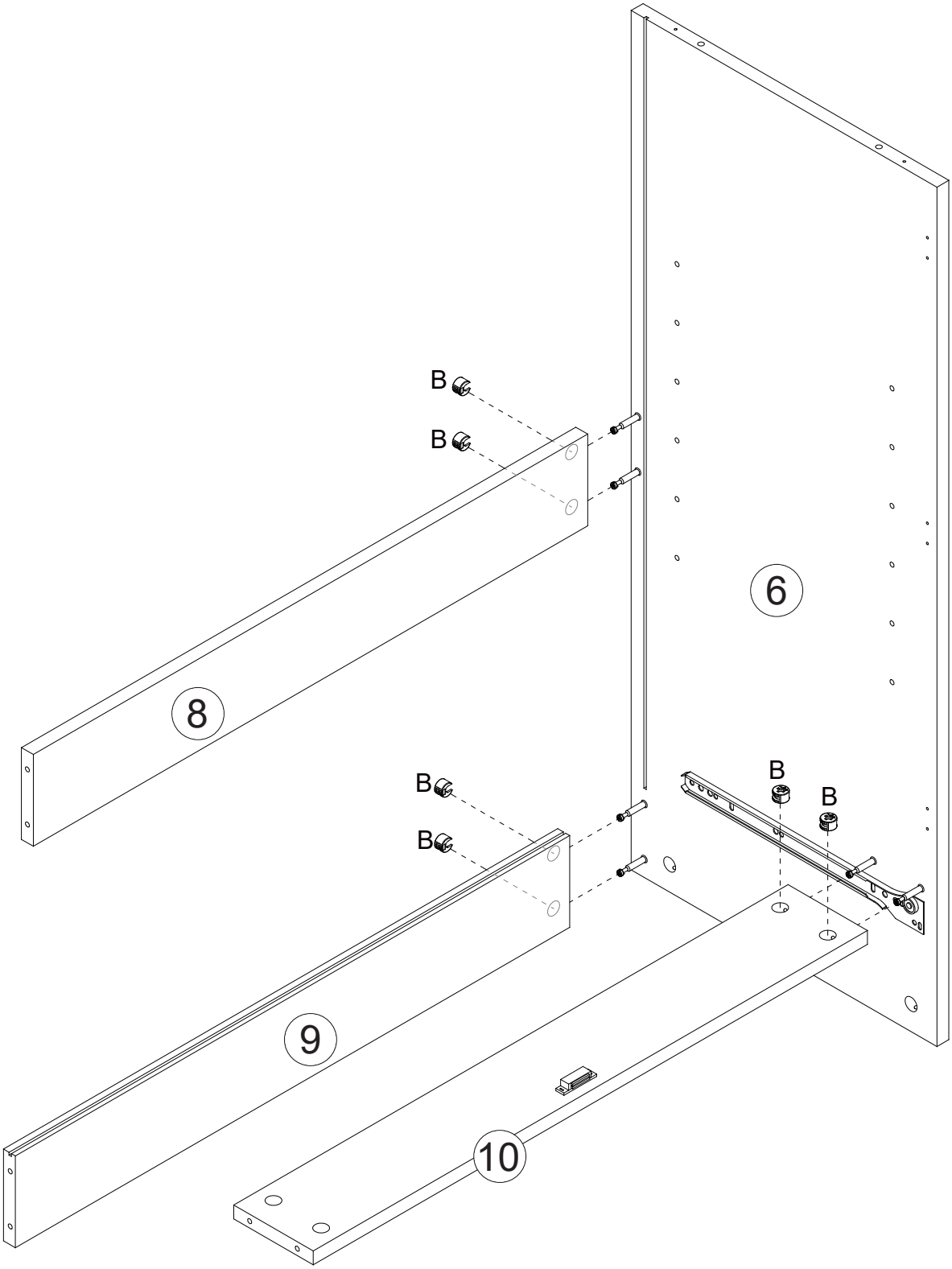

STEP 4

B	x 6

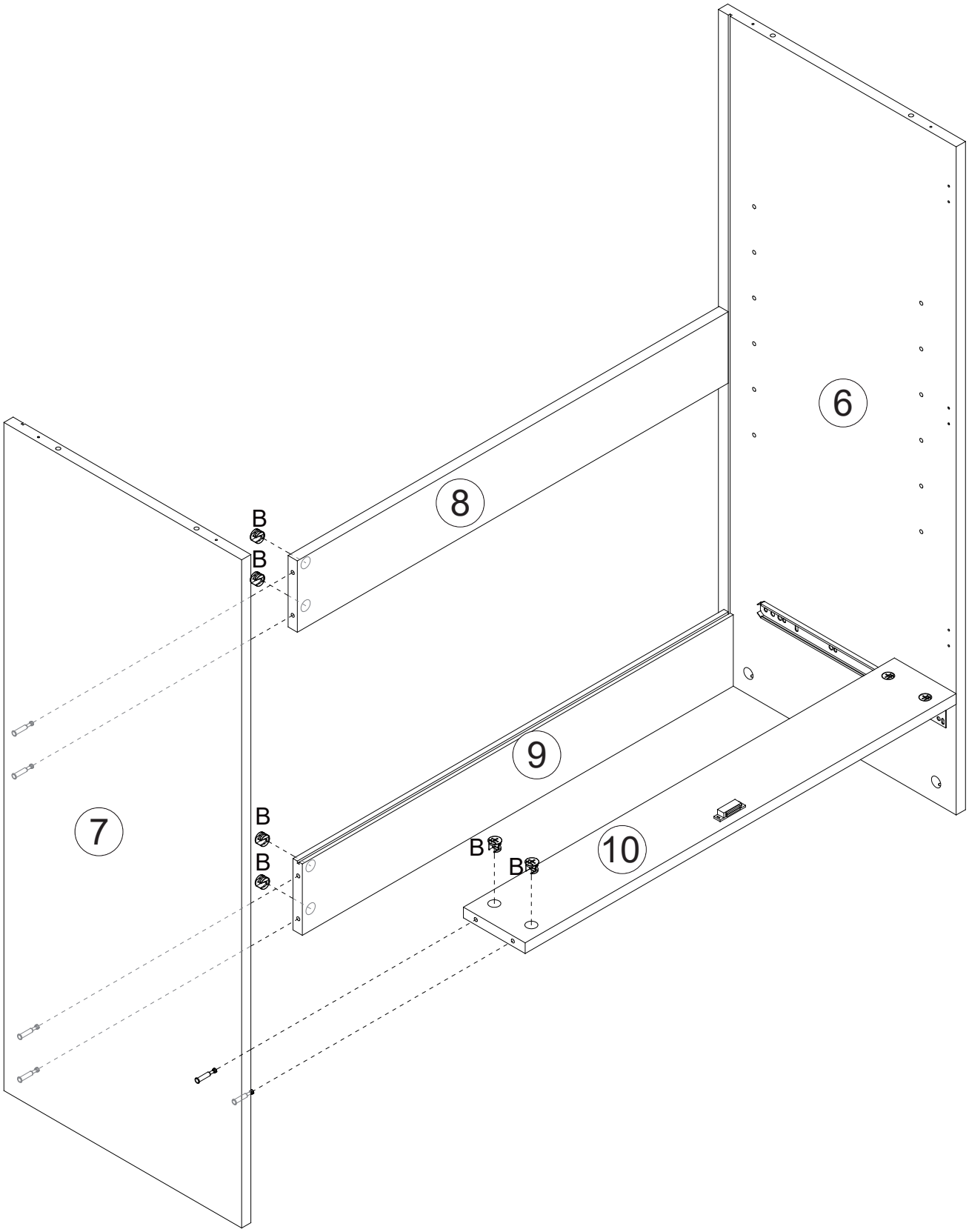

STEP 5

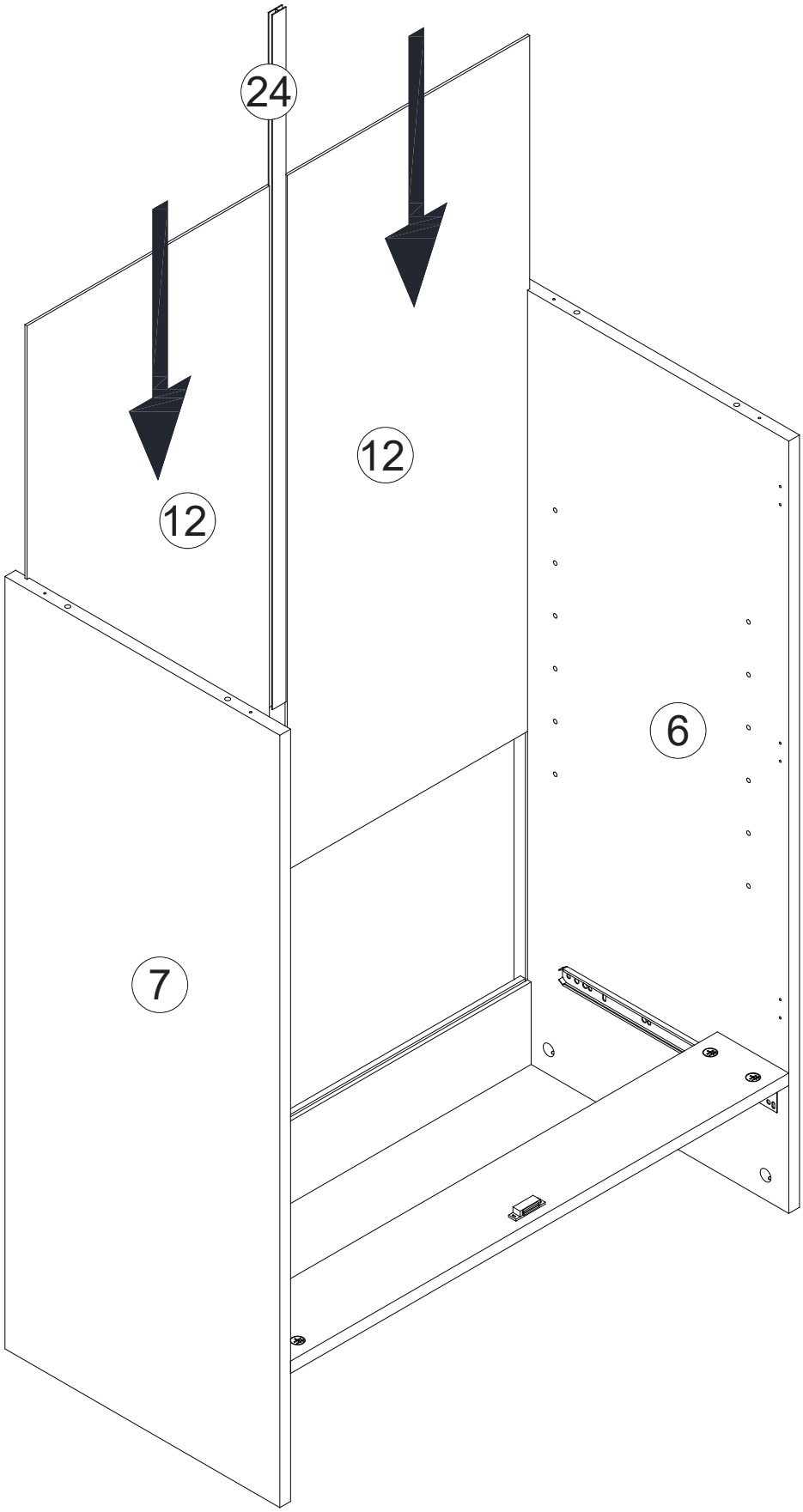

STEP 6

A	x12
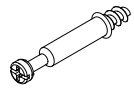	

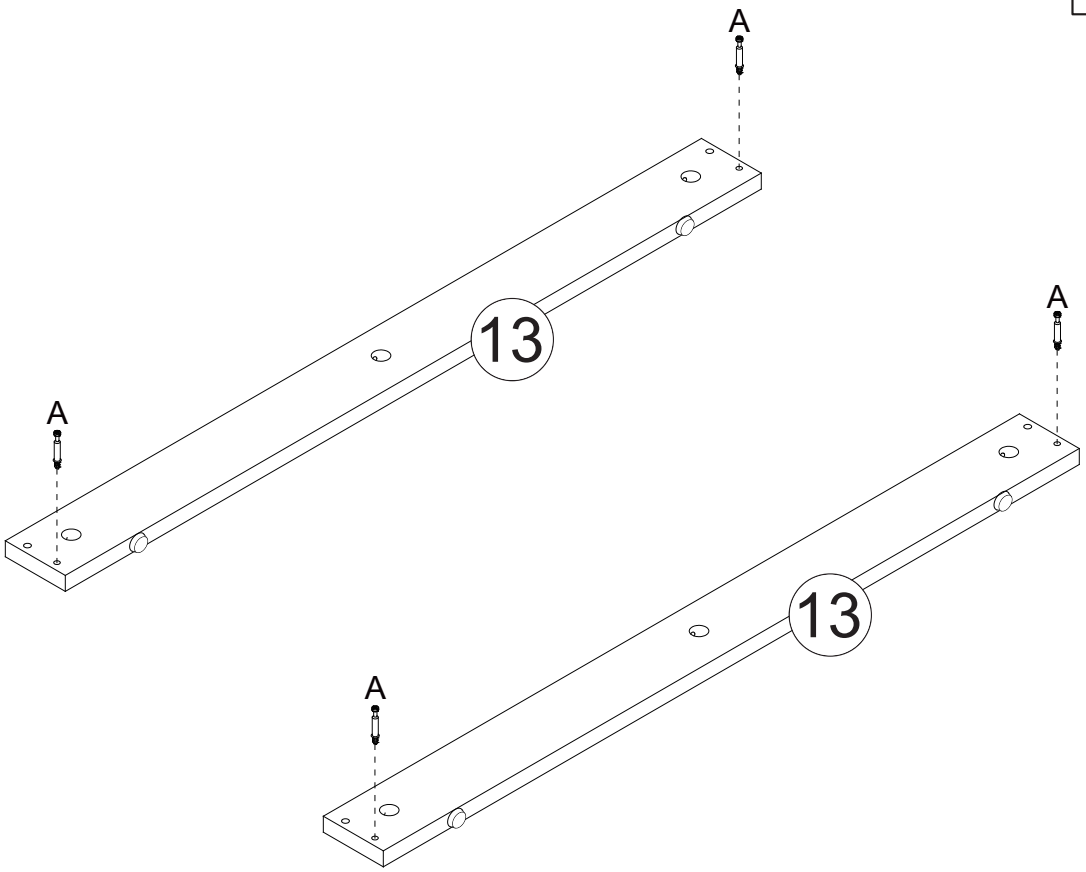

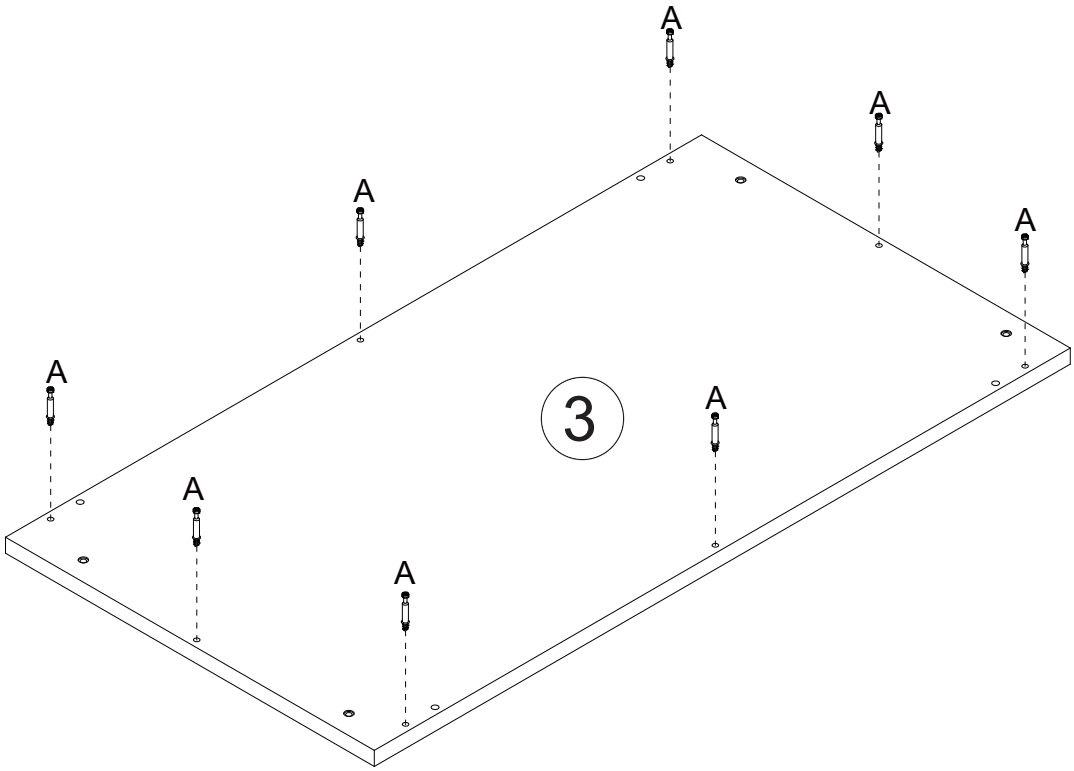

STEP 7

C	x4
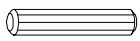	

B	x4

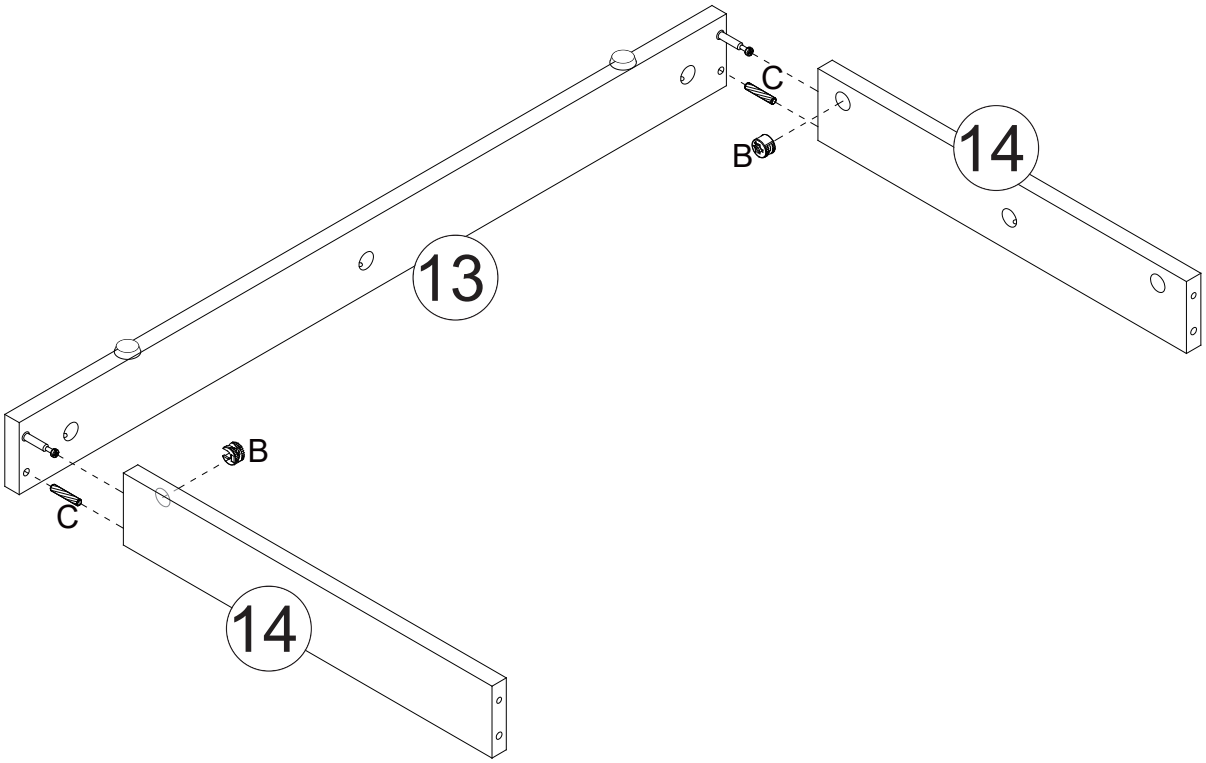

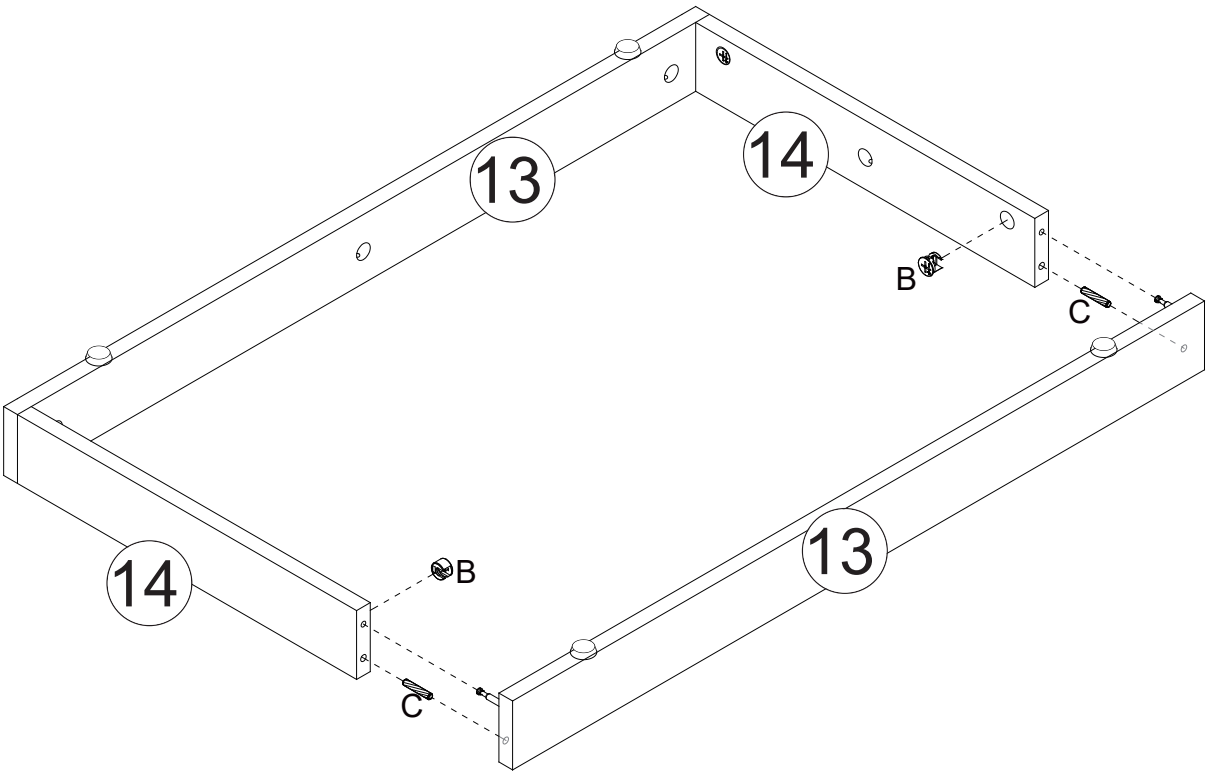

STEP 8

C	x4
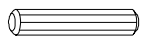	

B	x8

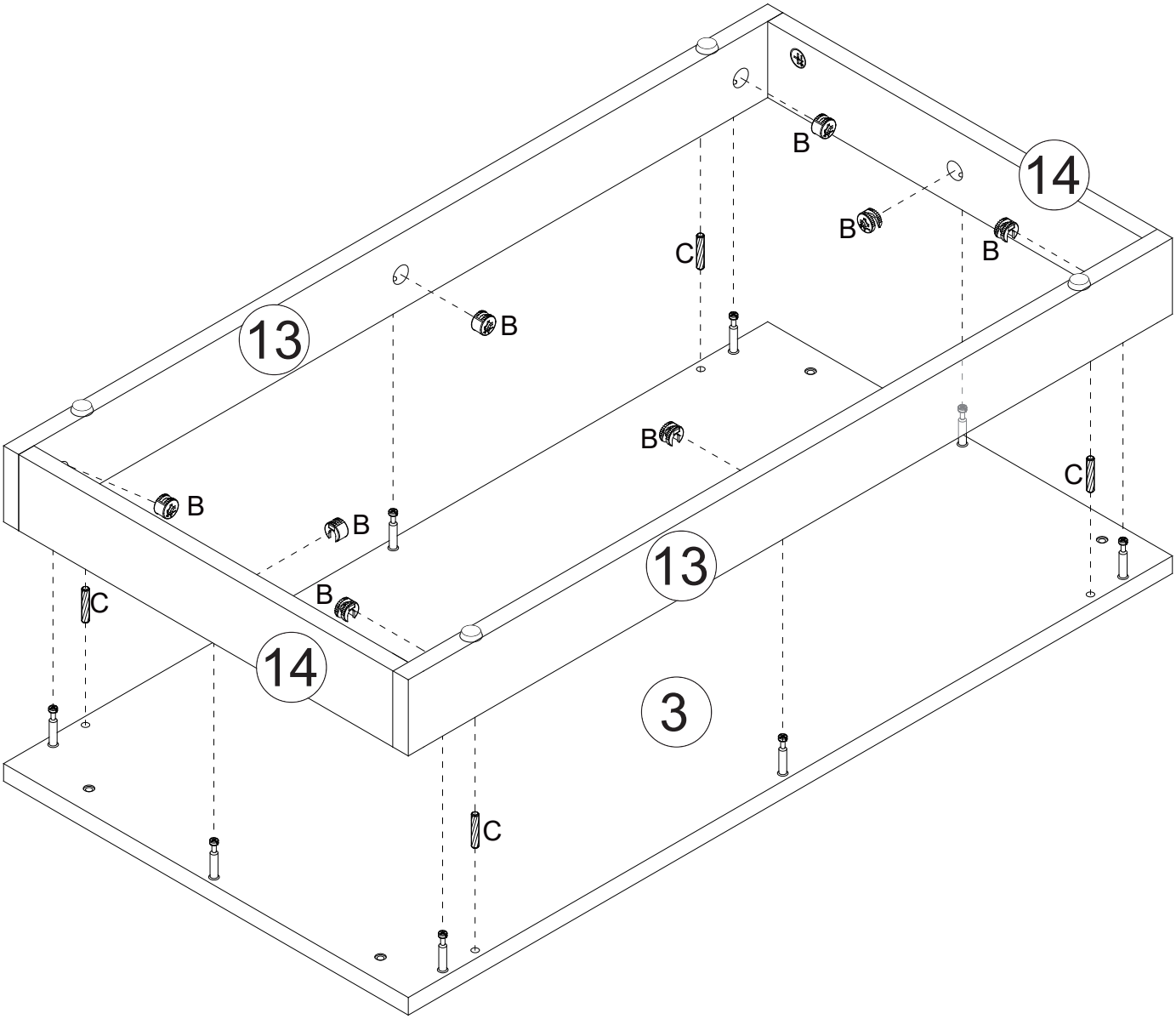

STEP 9

C	x4

D	x4
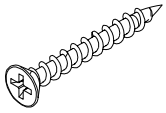	

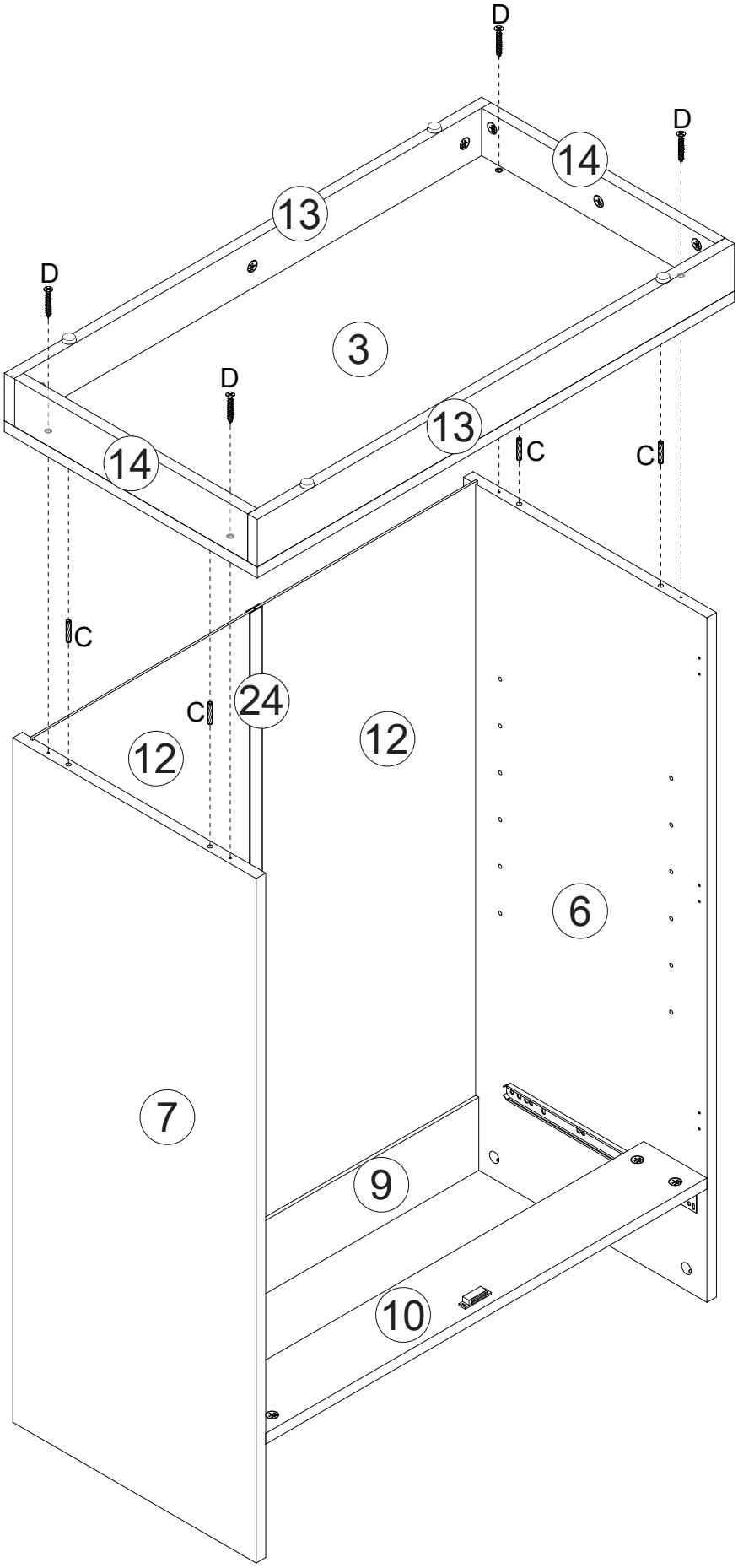

STEP 10

A	x4
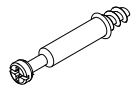	

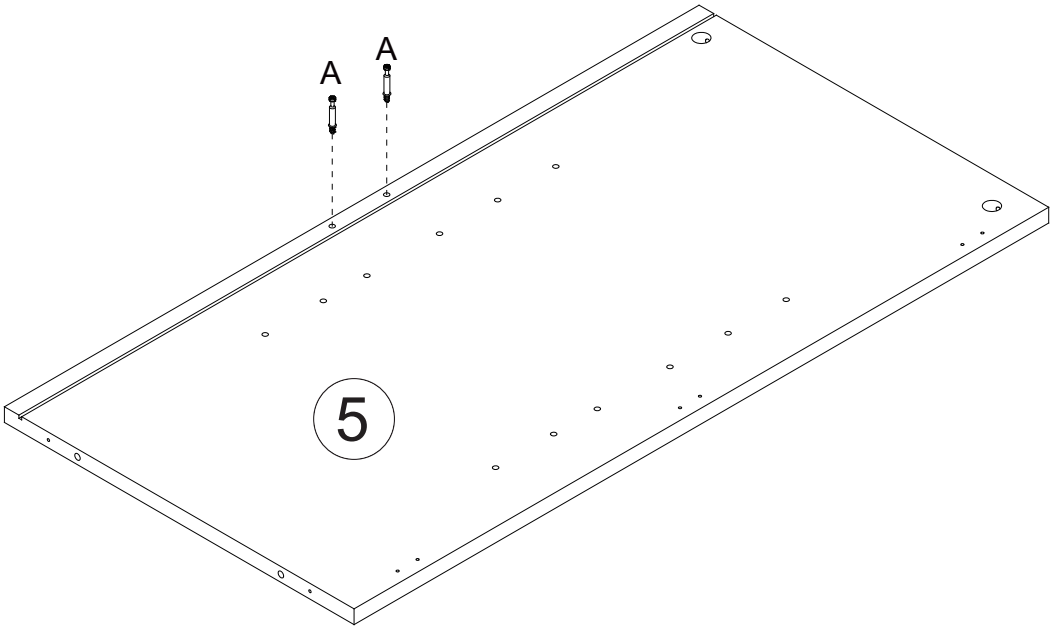

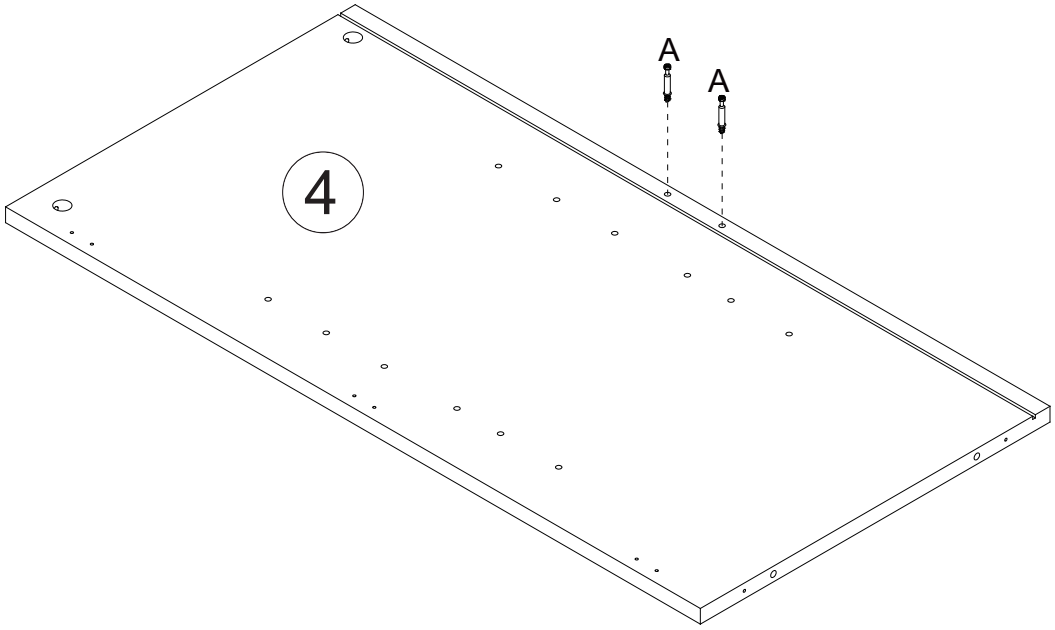

STEP 11

B	x4

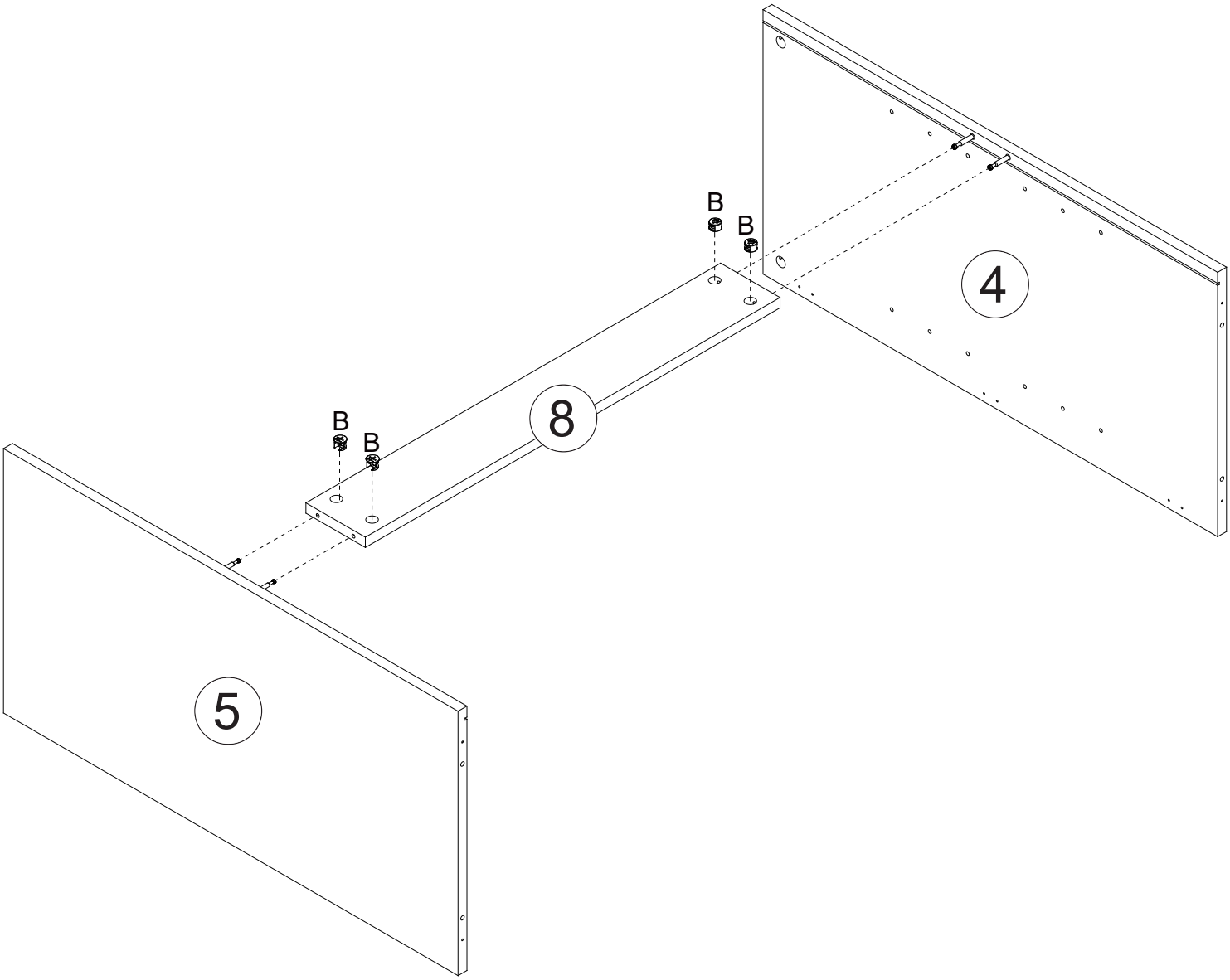

STEP 12

C	x 4

D	x4
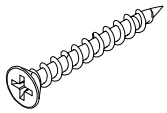	

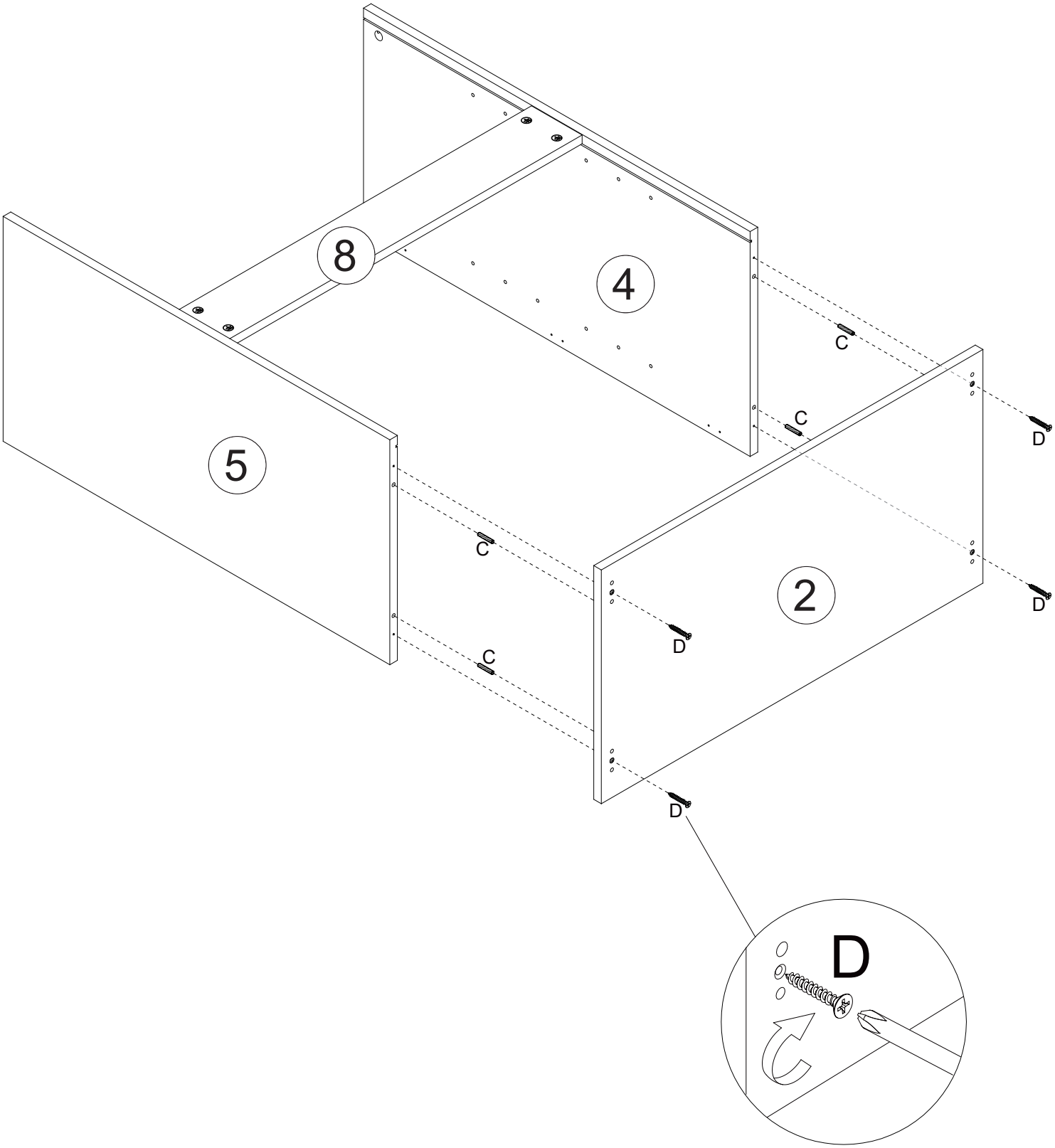

STEP 13

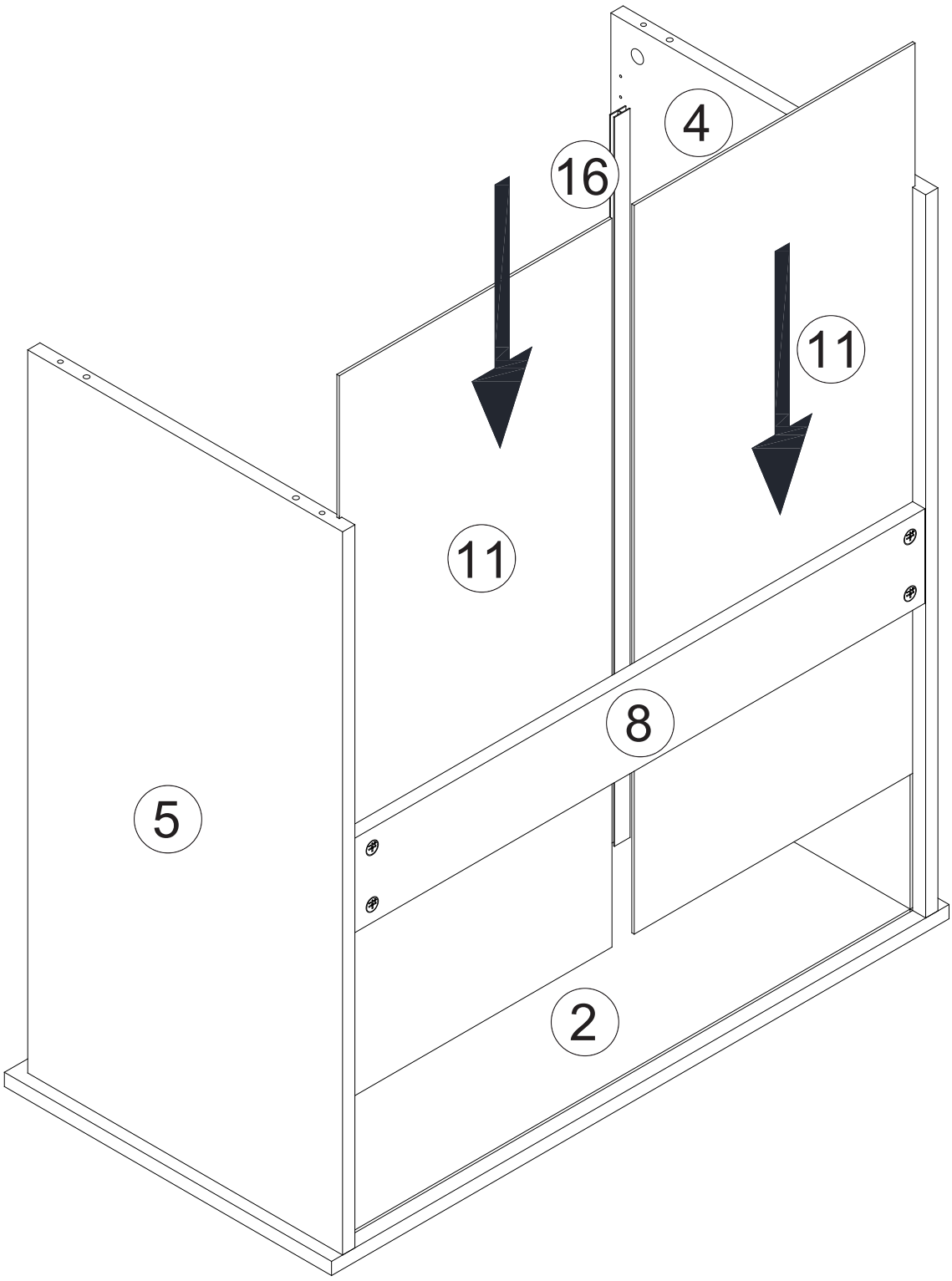

STEP 14

C	x4

B	x4

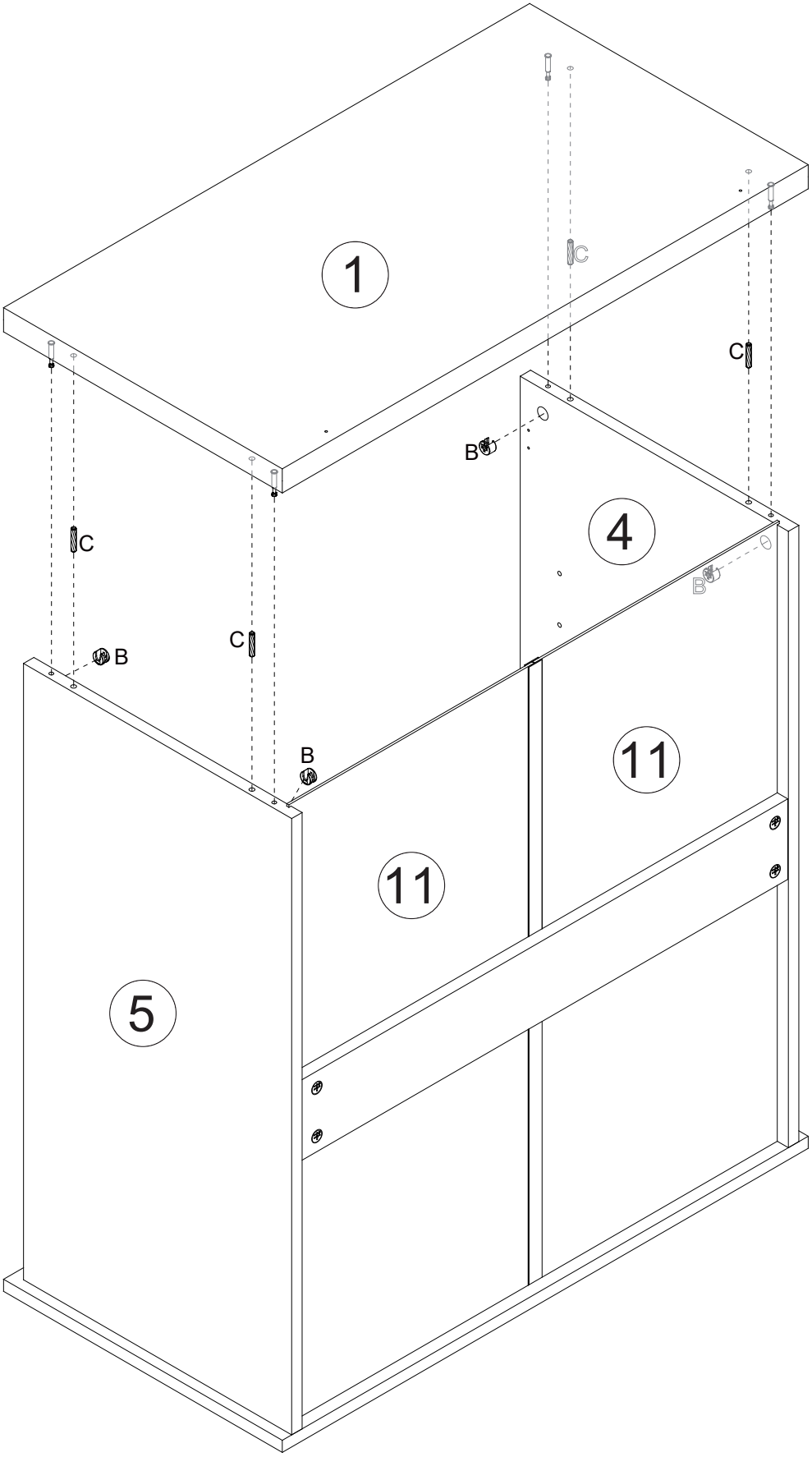

STEP 15

A	x4
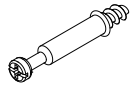	

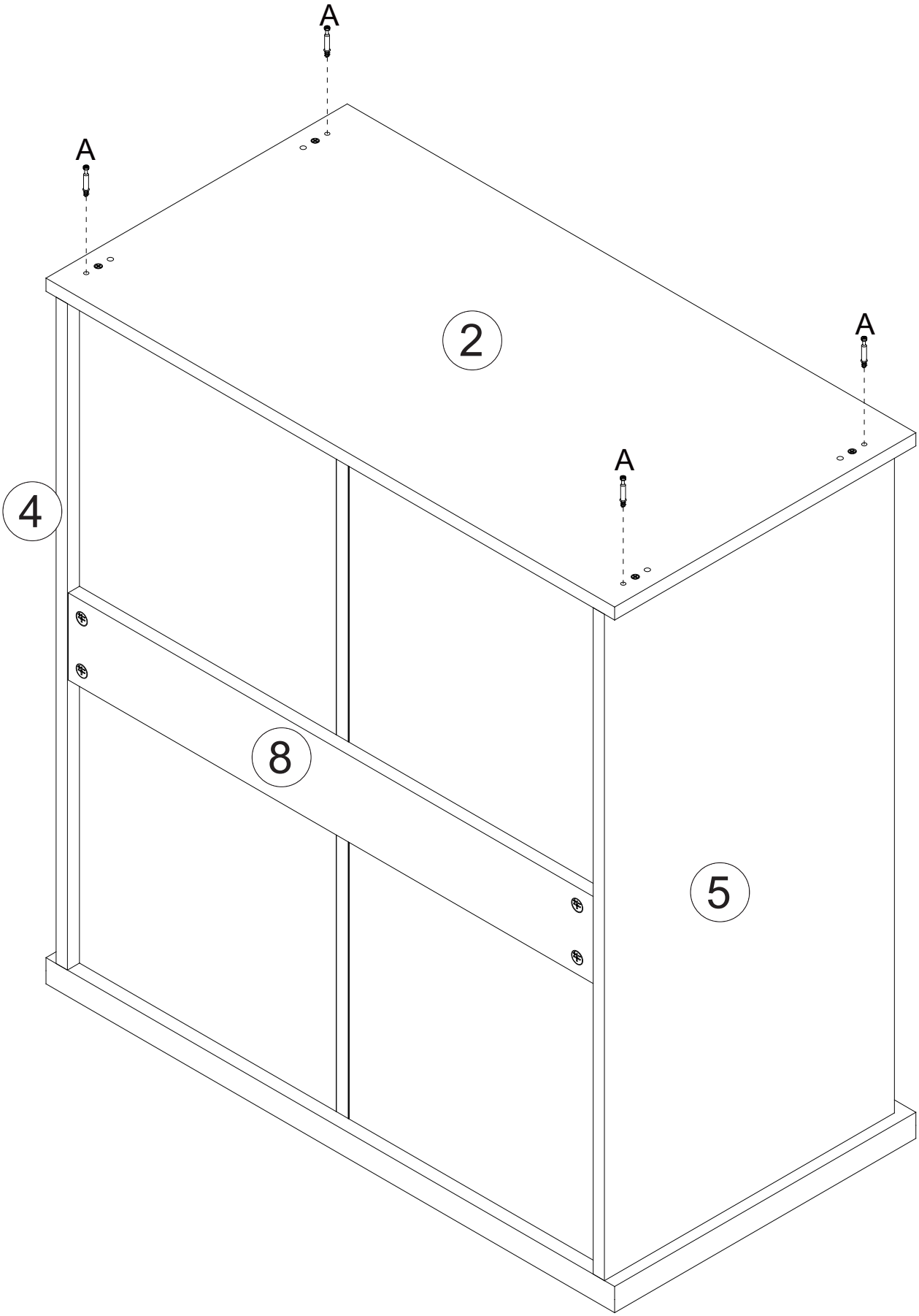

STEP 16

B	x4

C	x4

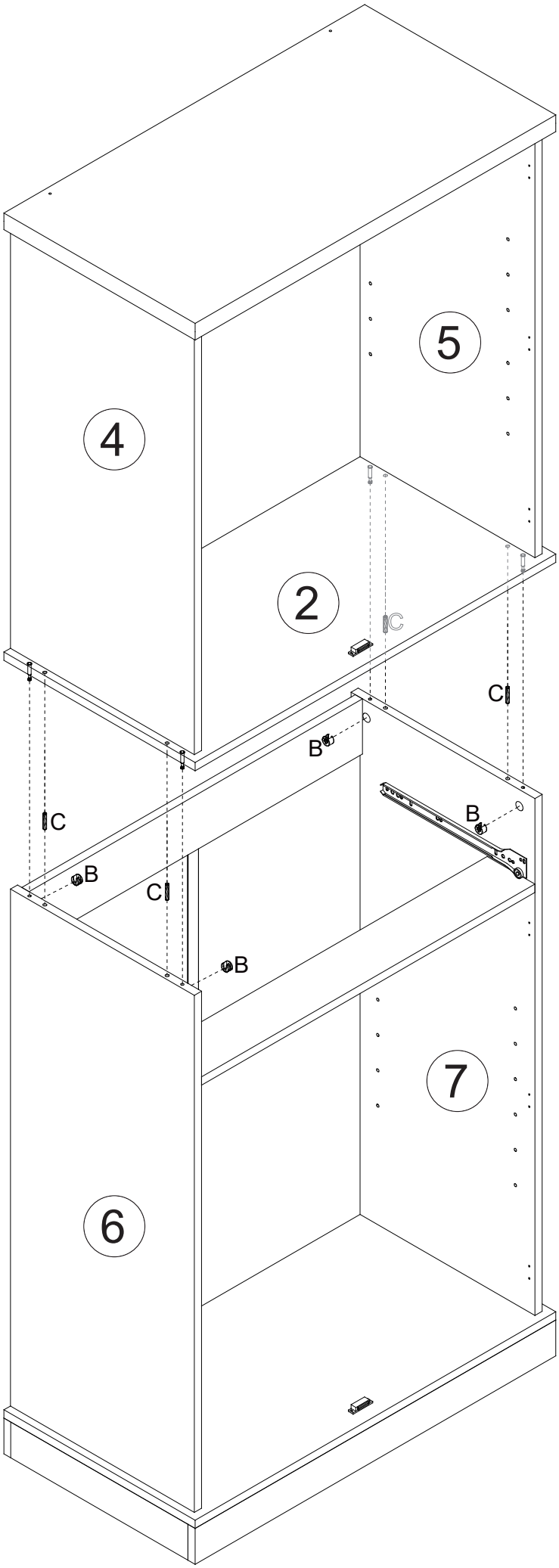

STEP 17

E	x4

F	x12

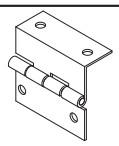

P	x8

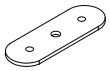

K	x32

Q	x4

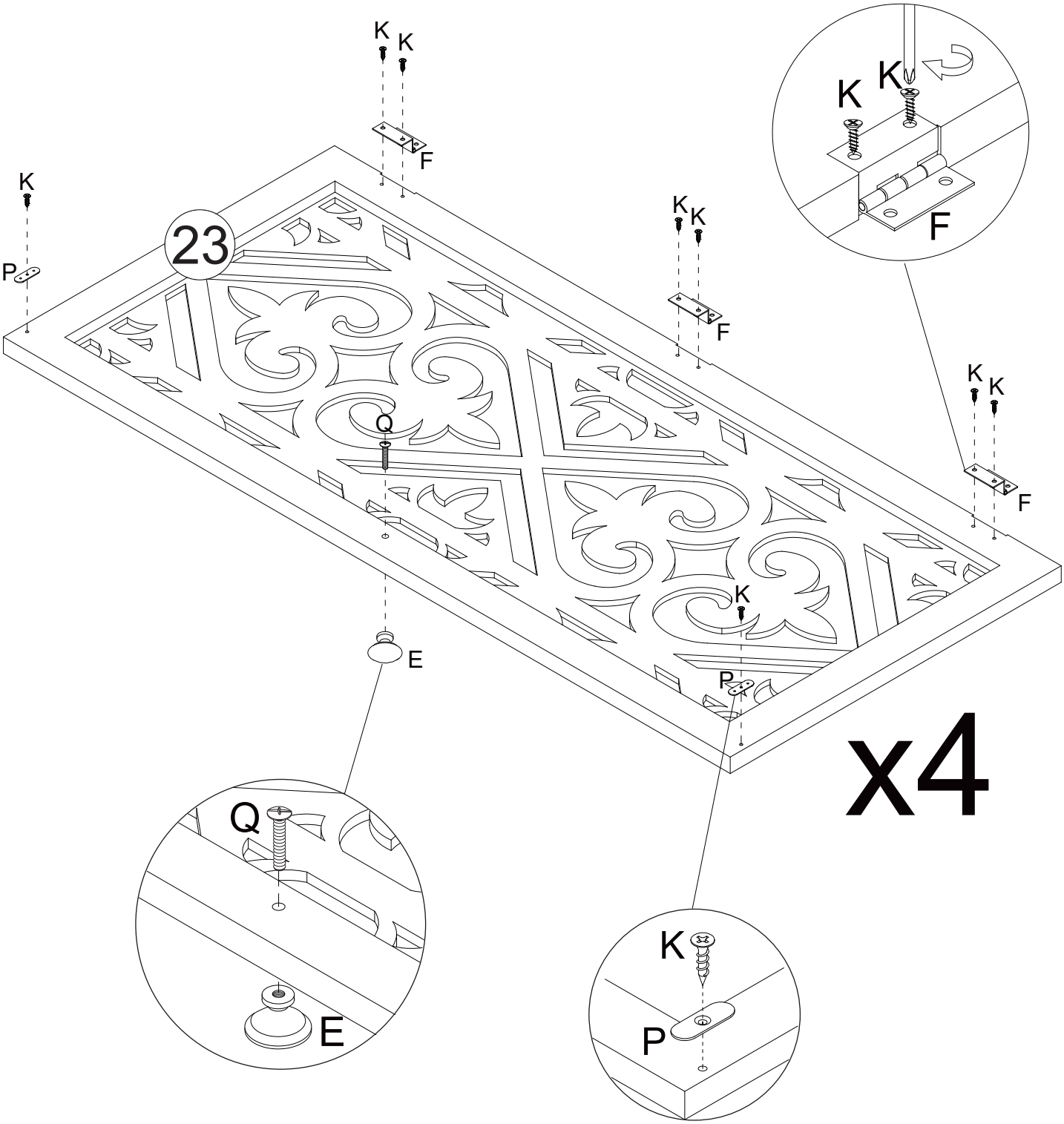

STEP 18

K	x24

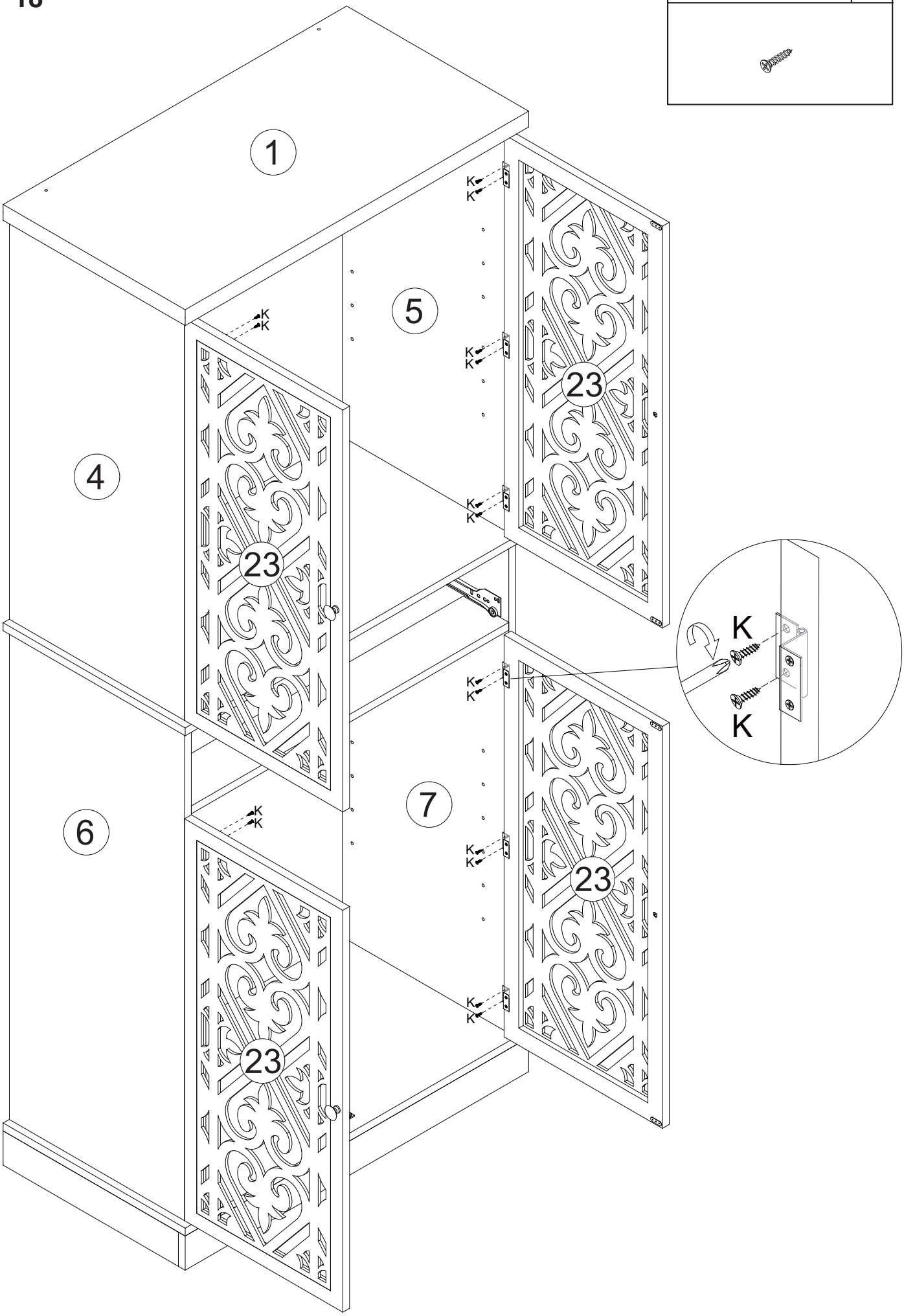

STEP 19

I	x16

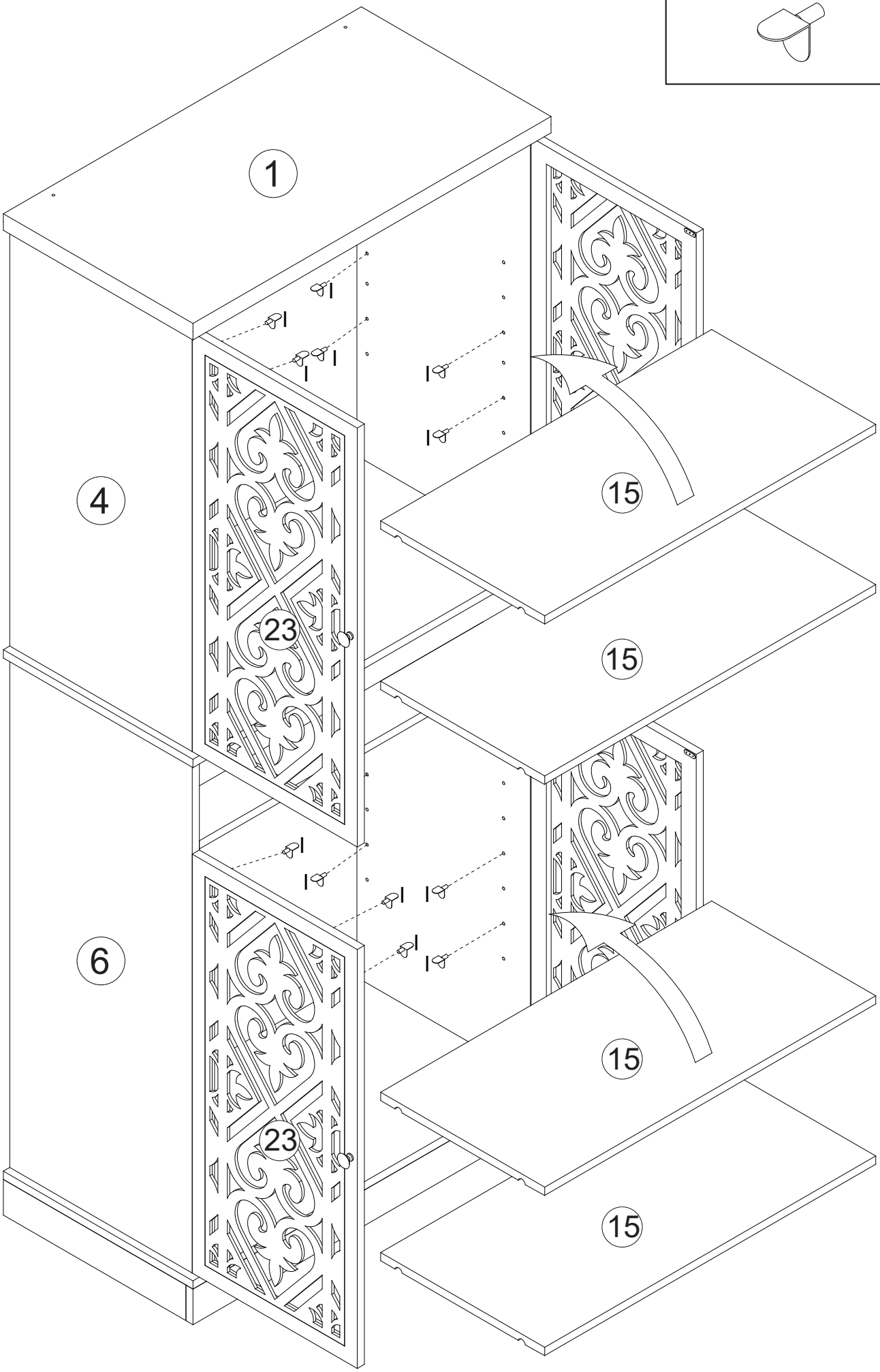

STEP 20

E	x2

R	x2

D	x5

A	x5

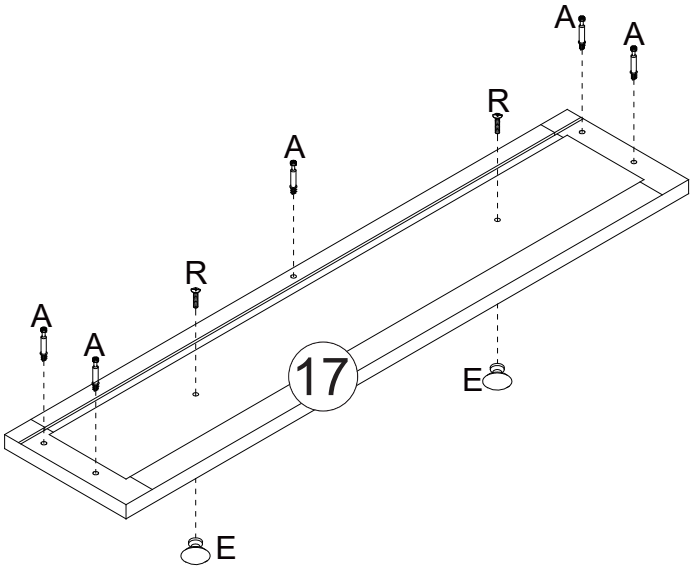

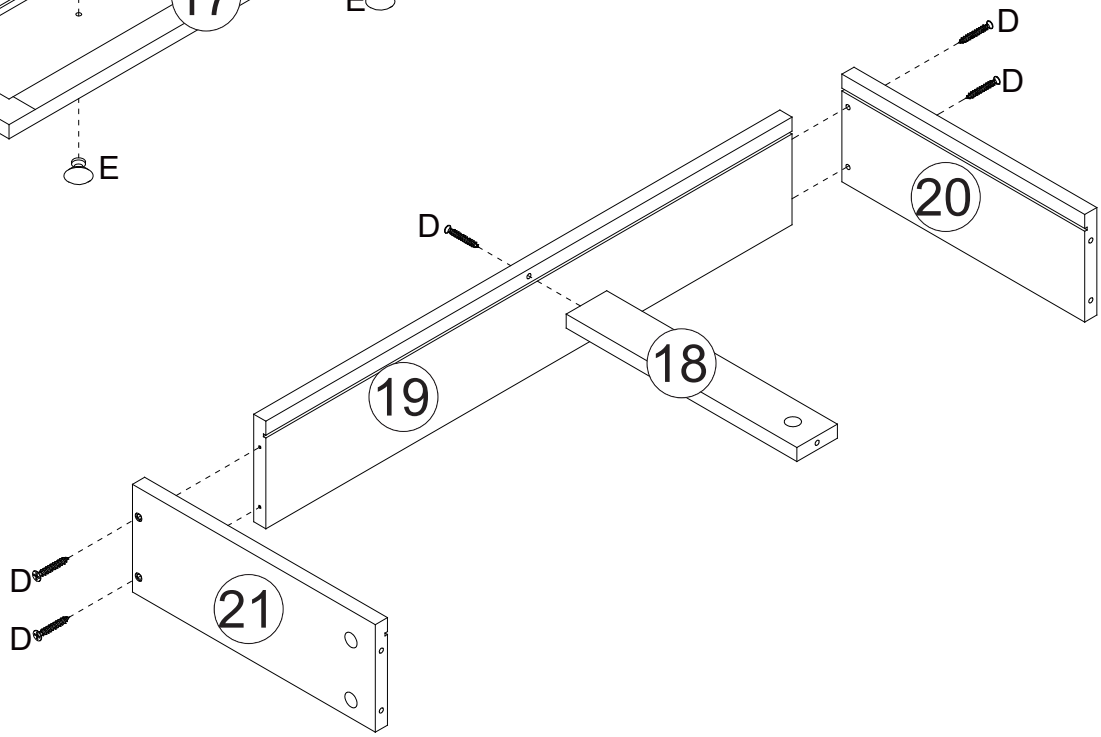

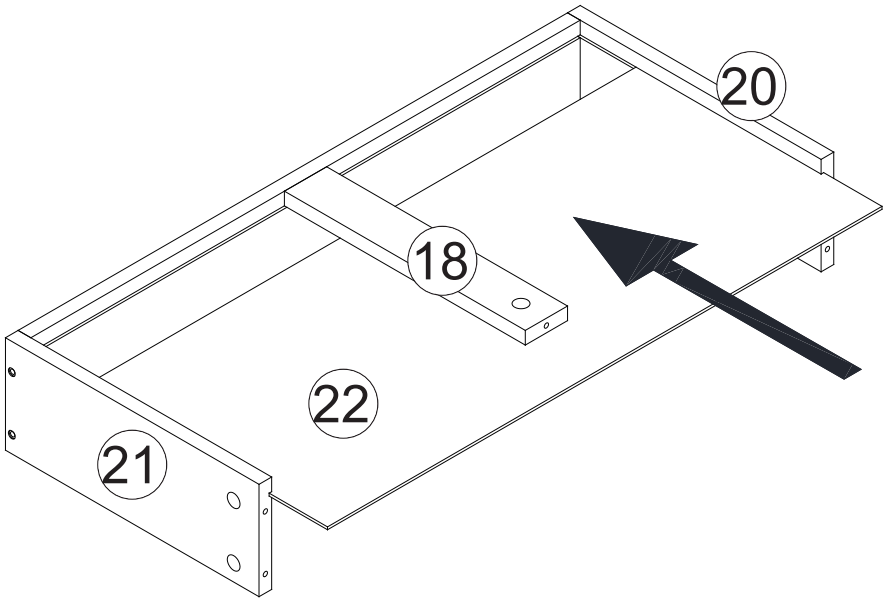

STEP 21

B	x5

J(DR)	x1

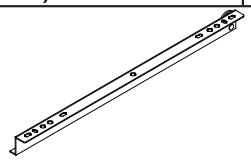

J(DL)	x1

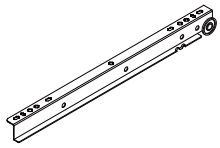

K	x6

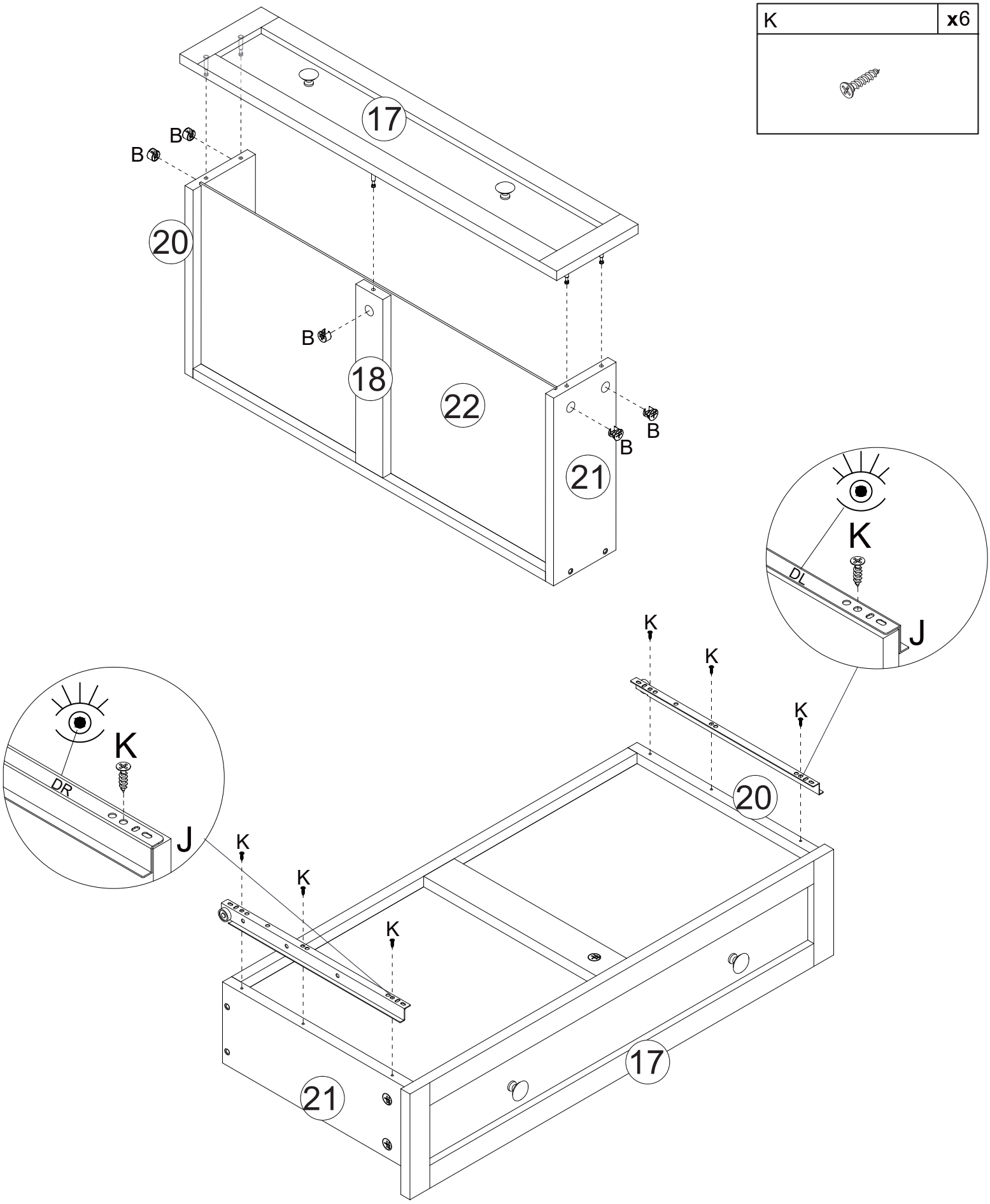

STEP 22

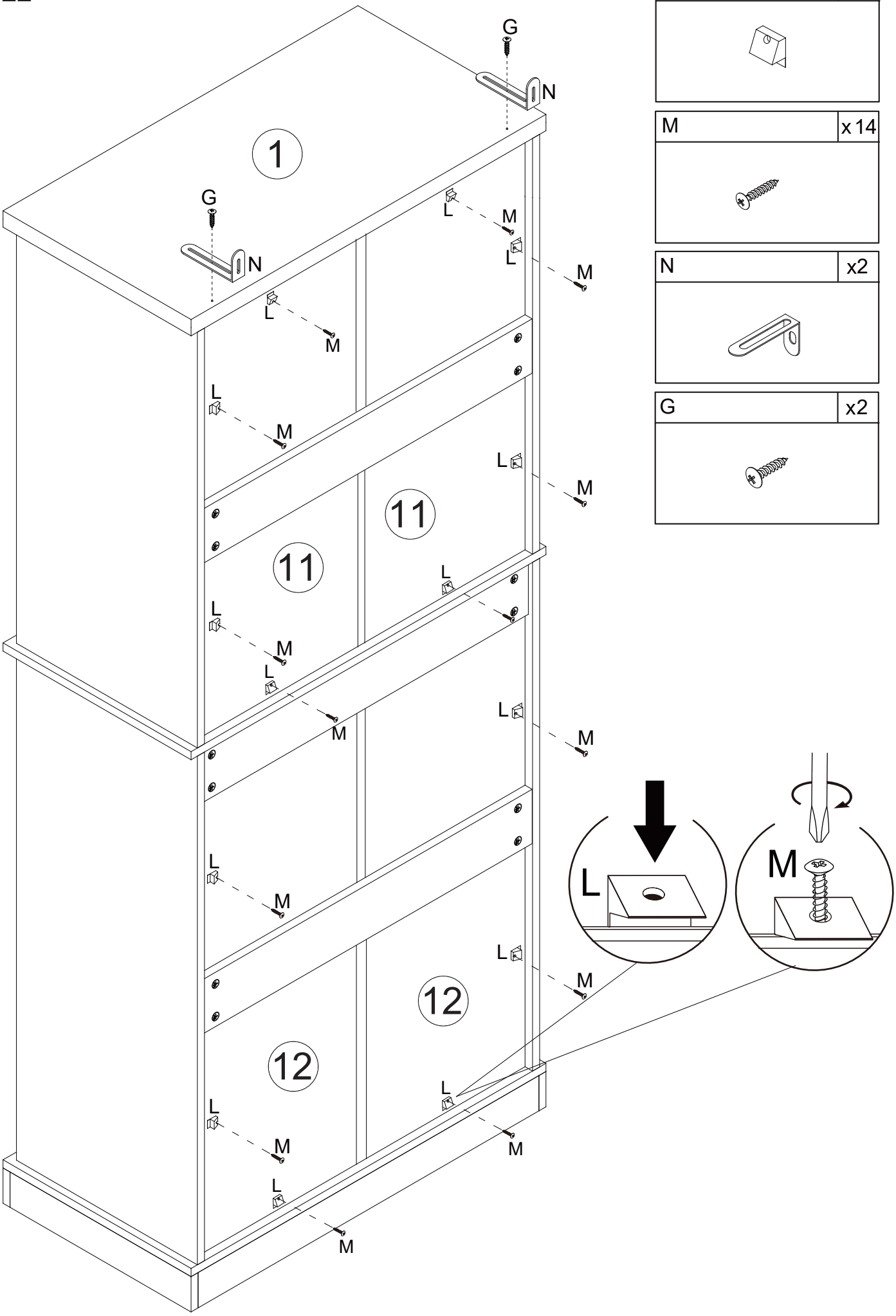

STEP 23

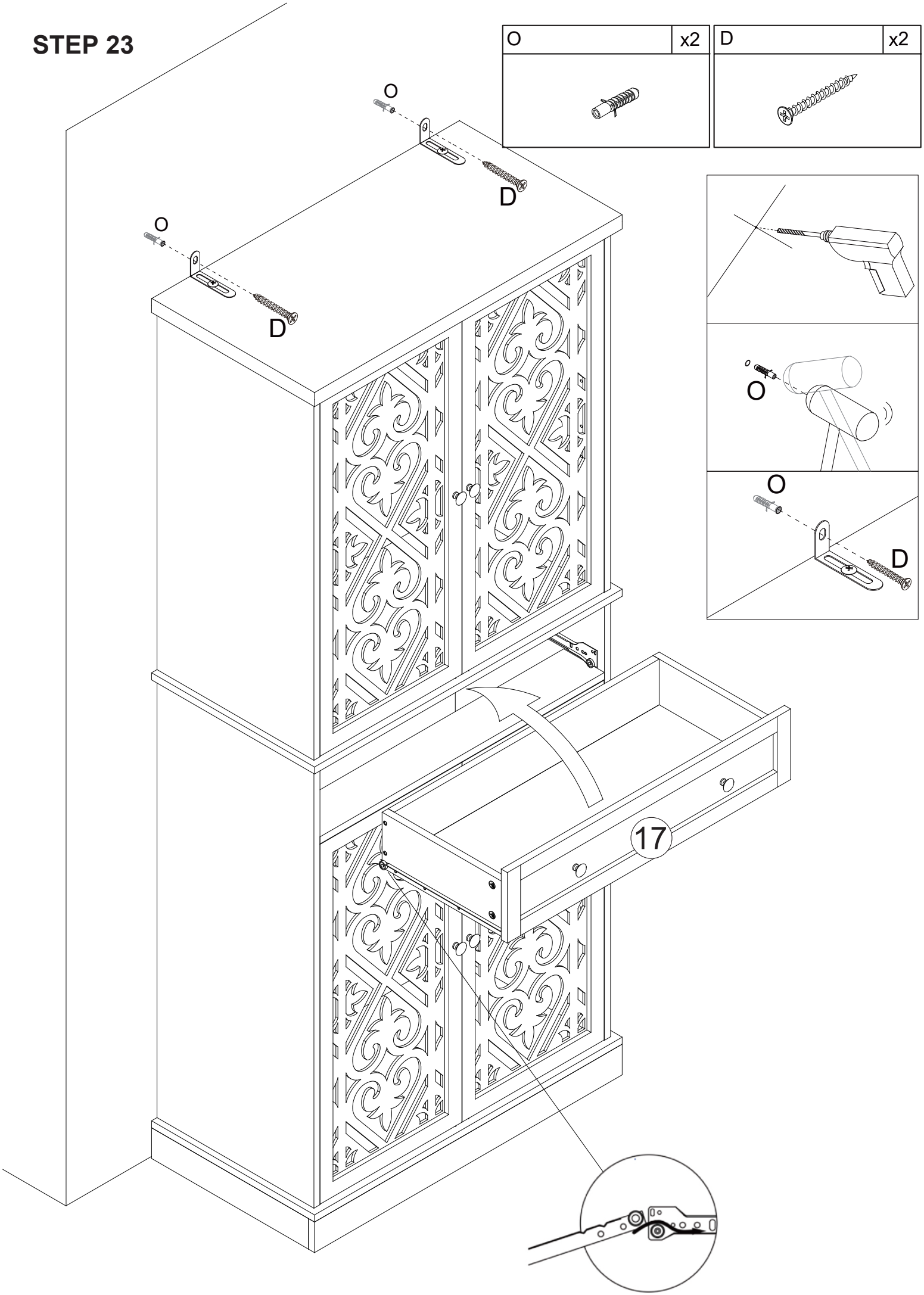

Proper Use

DO NOT	use for commercial purposes
DO NOT	use as a step stool or stand on table
DO NOT	put hot serving liquid directly on the table top
DO NOT	leave spilled liquid on the table top
DO NOT	use table if damaged
DO NOT	exceed weight limit
DO NOT	make temporary repairs
DO NOT	use outdoor