FORTIS

DESIGN ITALIANO

MADE IN ITALY

Rain Shower Heads

MB MATTE BLACK | BG BRUSHED GOLD | BN BRUSHED NICKEL | PC CHROME

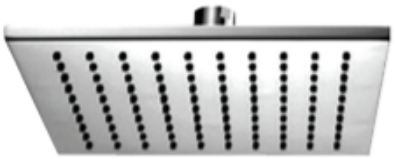



Brass
Anti-Lime
Anti-Calcium
1/2" Connections
1.8 GPM @ 60PSI

84760S1C

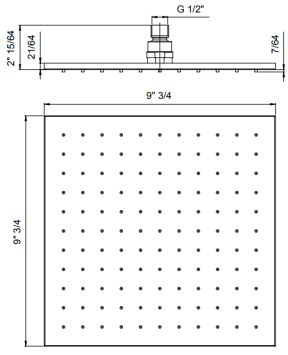

92760S1C

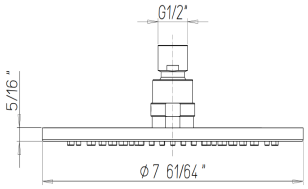

1571 Main Road-Newfield, NJ 08344
856-881-7890-info@paini-us.com

FORTIS

DESIGN ITALIANO

MADE IN ITALY

Wall Mount Shower Arms

MB MATTE BLACK BG BRUSHED GOLD BN BRUSHED NICKEL PC CHROME



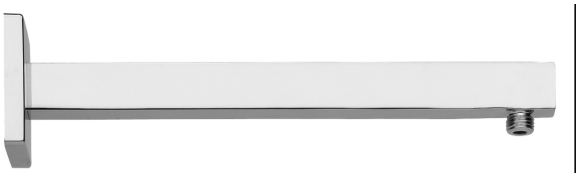

Brass Construction
1/2" Connections
12" Length

92745SP

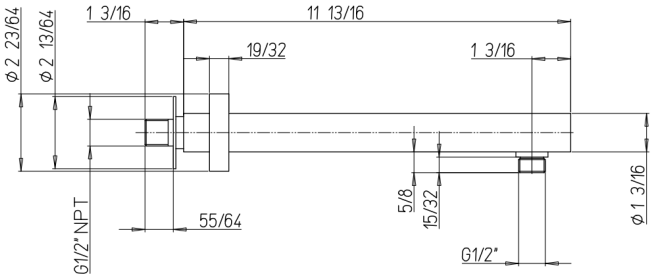

94745SP

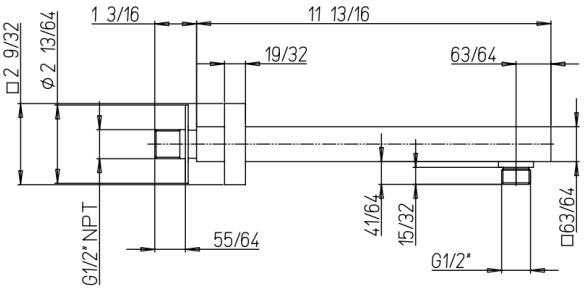

1571 Main Road-Newfield, NJ 08344
856-881-7890-info@paini-us.com

INSTALLATION DIMENSIONS

Serie Rough-In Valve

VALVE691

½” Thermo Shower with Diverter & Volume Control Rough-in Valve

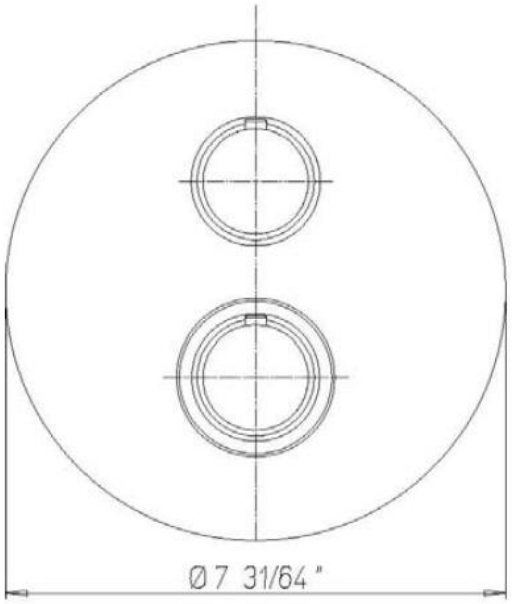

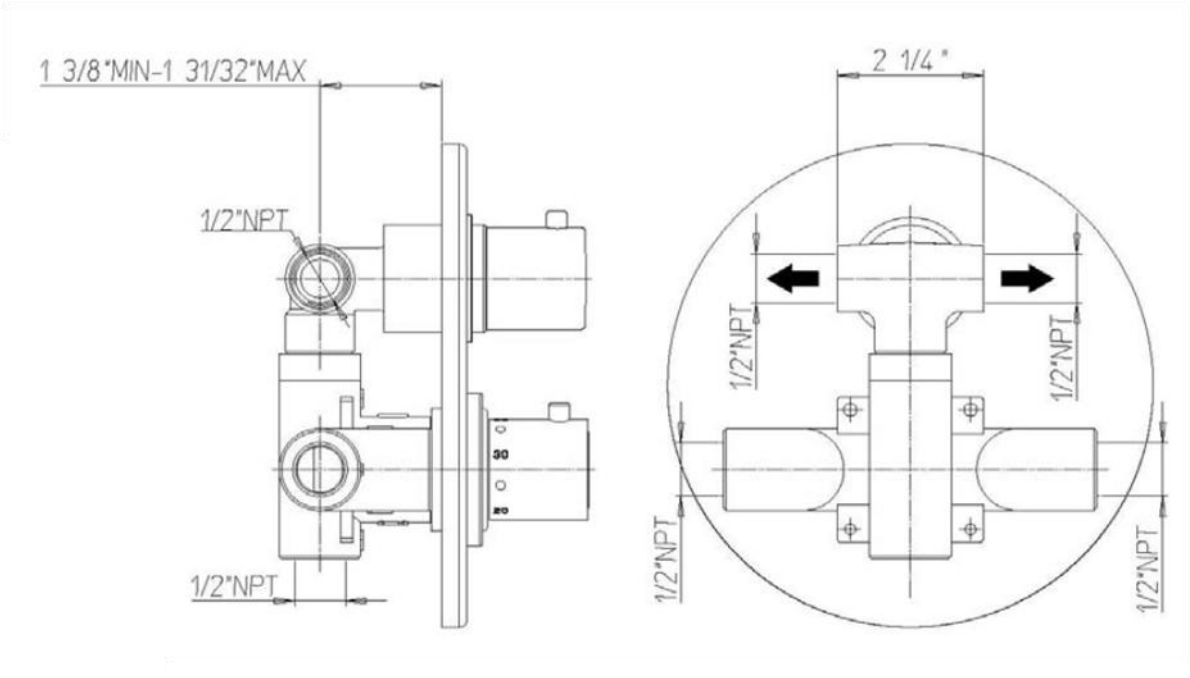

FORTIS

NEW

DESIGN ITALIANO

MADE IN ITALY

Slide Bar Kits

MB MATTE BLACK | BG BRUSHED GOLD | BN BRUSHED NICKEL | PC CHROME

27" SQUARE
841290C



Features

Brass Shower Bar
Wall Mount Bracket
Hand Held Wand with
adjustable shower holder
60" flexible hose
1.8 GPM @ 60PSI MAX

36" ROUND
601290C



1571 Main Road-Newfield, NJ 08344
856-881-7890-info@paini-us.com

FORTIS

DESIGN ITALIANO

Slide Bar Kits

841290C

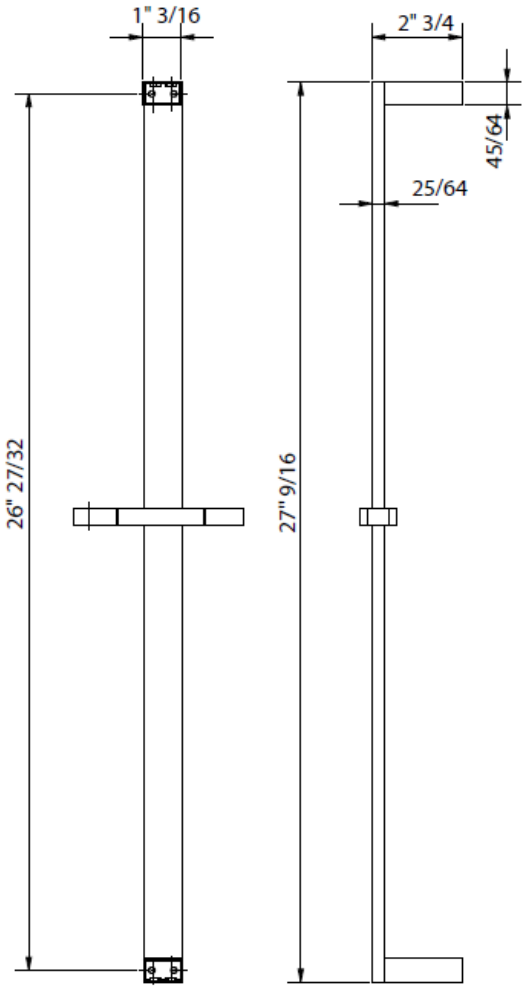

601290C

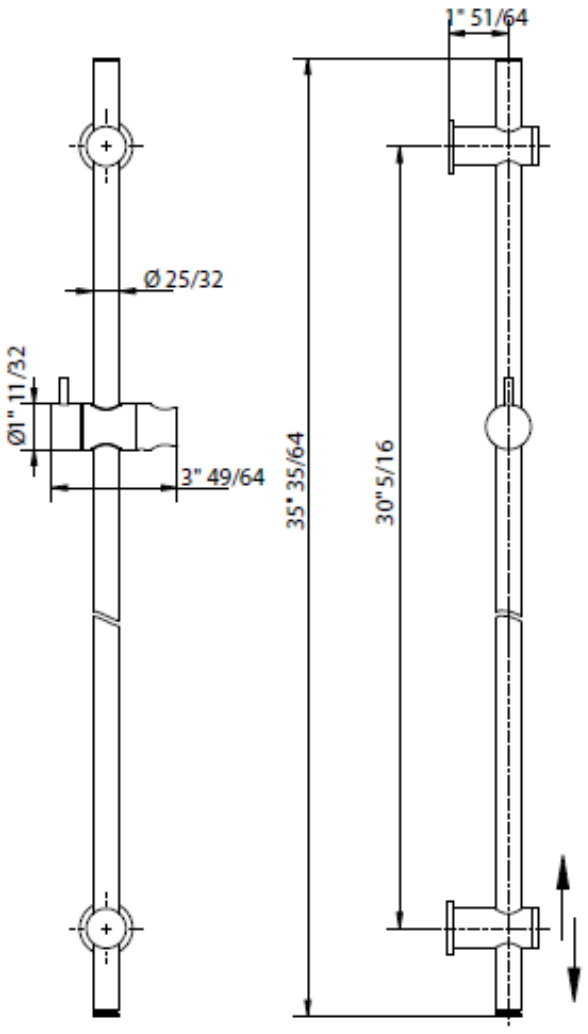

1571 Main Road-Newfield, NJ 08344
856-881-7890-info@paini-us.com

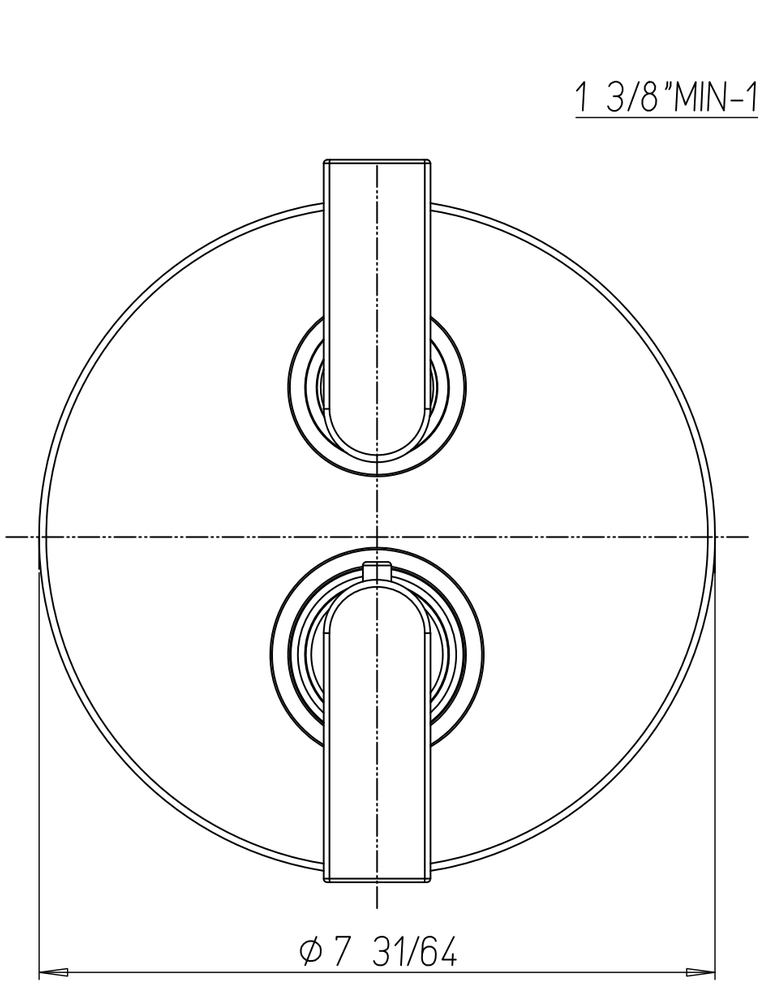
ϕ 7 31/64

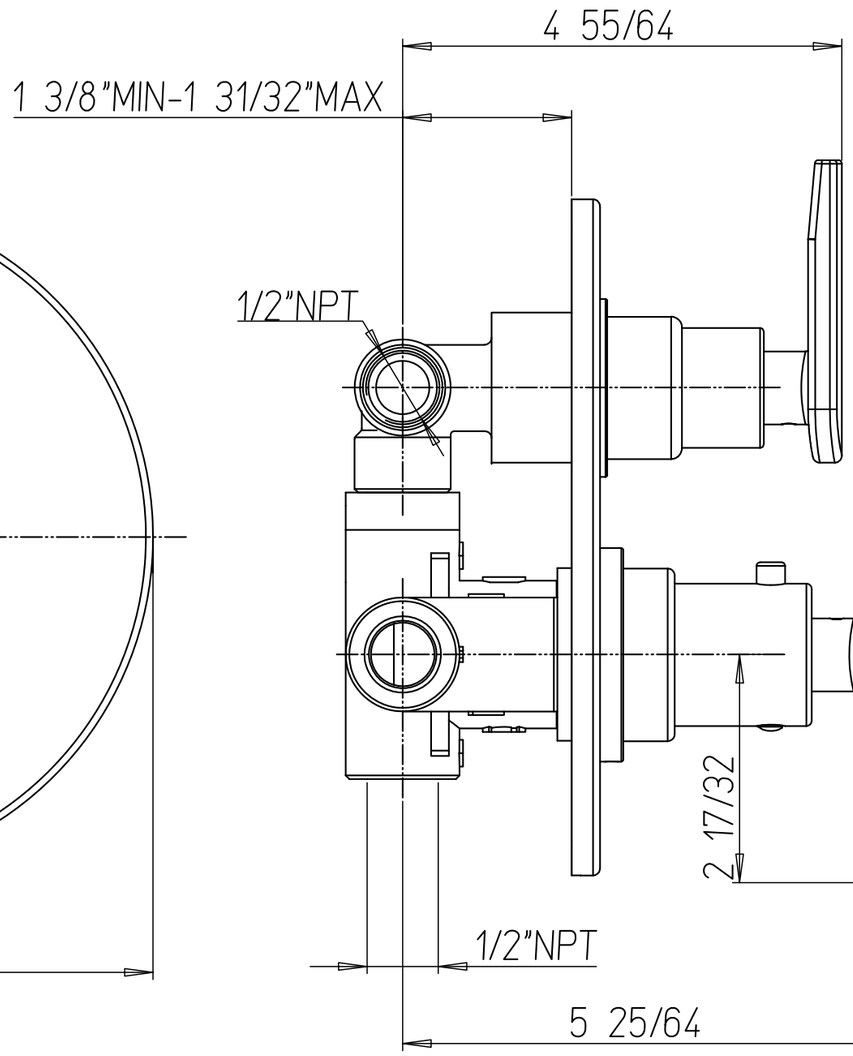
4 55/64
1 3/8"MIN-1 31/32"MAX
1/2"NPT
2 17/32
1/2"NPT
5 25/64

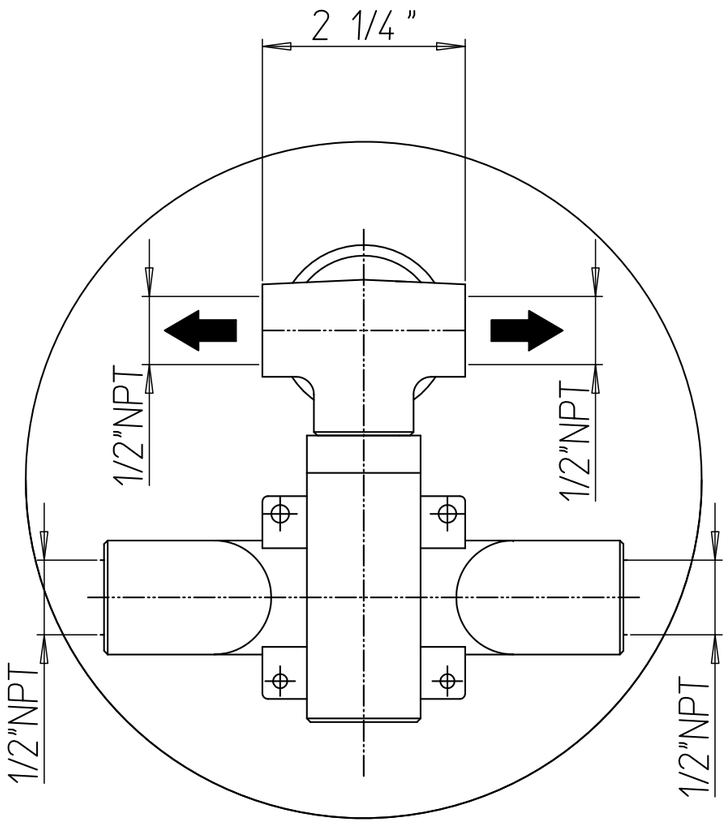
2 1/4 "
1/2"NPT
1/2"NPT
1/2"NPT
1/2"NPT