ASSEMBLY INSTRUCTION

SKU CODE: (BSW09168-1-2)

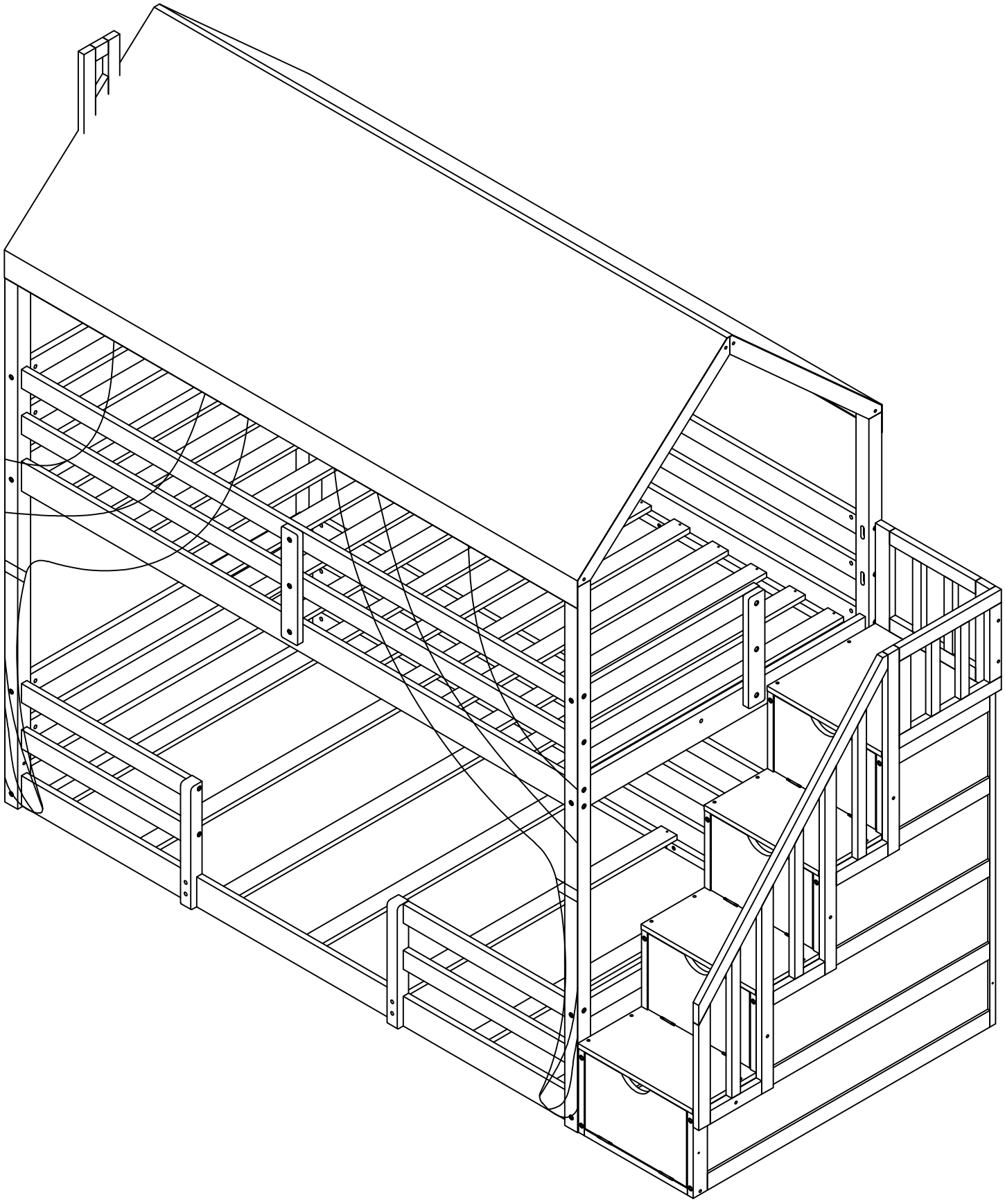

! SAFETY WARNINGS !

1. This bed is designed for use only mattress (es) meeting the following specifications on the upper bunk, and lower bunk

Upper bed

Bed Type	**Length**	**Width**	**Thickness**
Twin Standard	*74" - 75"*	*38 1/ 2"*	*6" max*

Lower **bed**

Bed Type	**Length**	**Width**	**Thickness**
Twin Standard	*74" - 75"*	*38 1/ 2"*	*8" max*

2. Replacement parts, including additional guardrails, maybe obtained from any of our dealers.
3. Follow the information on the warnings appearing on the upper bunk bed end structure and on the carton. Do not remove warning label from bed
4. Always use the recommended size mattresses or mattress supports, or both, to help prevent the likelihood of entrapment or falls.
5. Surface of mattress must be at least 5" (127mm) below the upper edge of guardrails
6. Do not allow children under 6 years of age to use the upper bunk.
7. Periodically check and ensure that the guardrail, ladder, and other components are in their proper position, free from damage, and that all connectors are tight.
8. Do not allow horseplay on or under the bed and prohibit jumping on the bed.
9. Always use the ladder for entering and leaving the upper bunk.
10. Do not use substitute part. Contact the manufacture or dealer for replacement part
11. Use of a night light may provide added safety precaution for a child using the upper bunk..
12. Always use guardrails on both long sides of the upper bunk. If the bunk bed will be placed next to the wall, the guardrail that runs the full length of the bed should be placed against the wall to prevent entrapment between the bed and wall.
13. The use of water or sleep flotation mattresses is prohibited
14. STRANGULATION HAZARD - Never attach or hang items to any part of the bunk bed that are not designed for use with the bed; for example, but not limited to, hook, belts and jump ropes
15. Keep these instruction for future reference
16. Prohibit more than one person on upper bunk
17. We recommend assembling your bunk bed on the shipping carton to protect your floor or carpet
18. Be certain all staples are out of the box before beginning assembly on the shipping carton.

OPTION 1

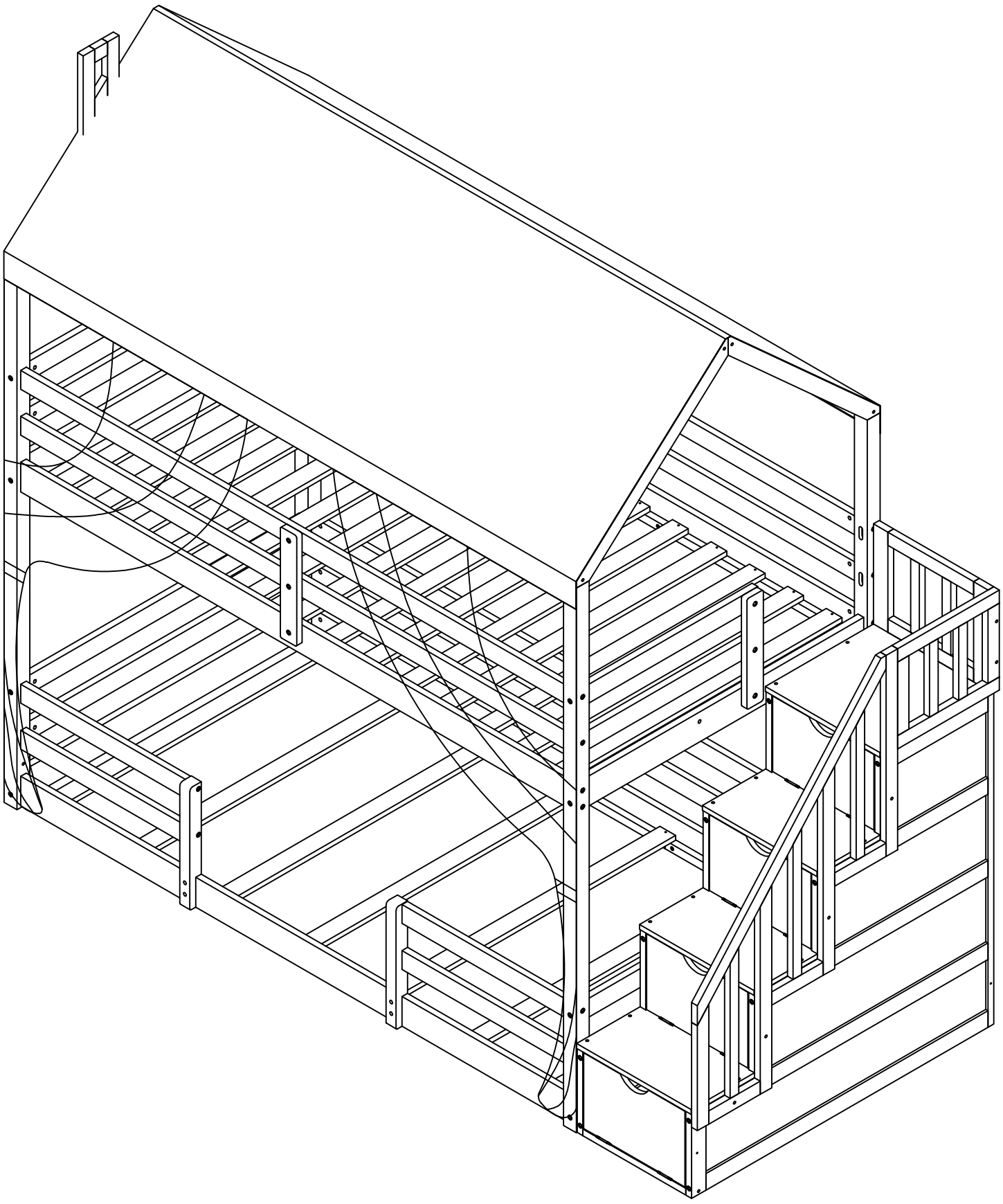

OPTION 2

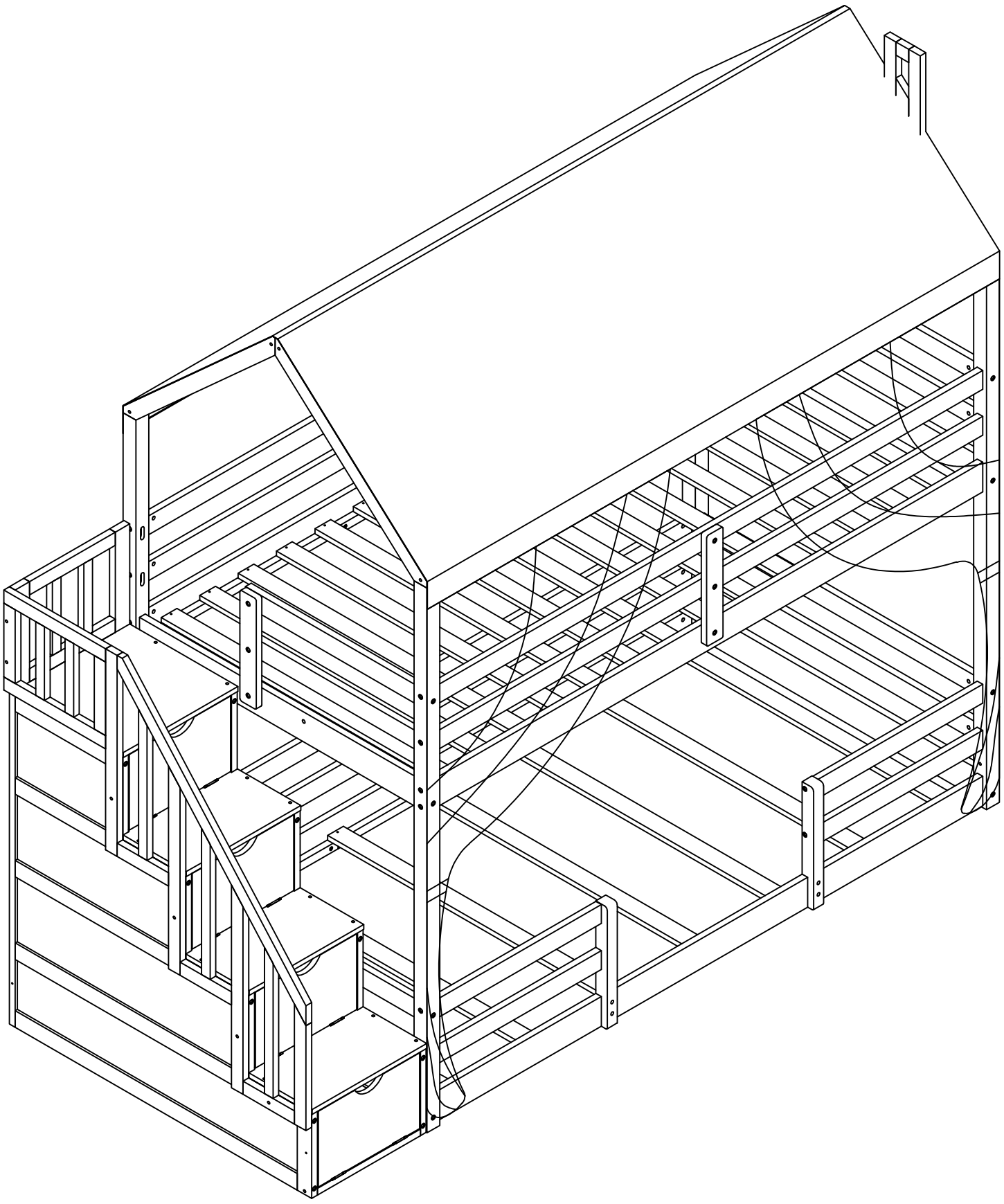

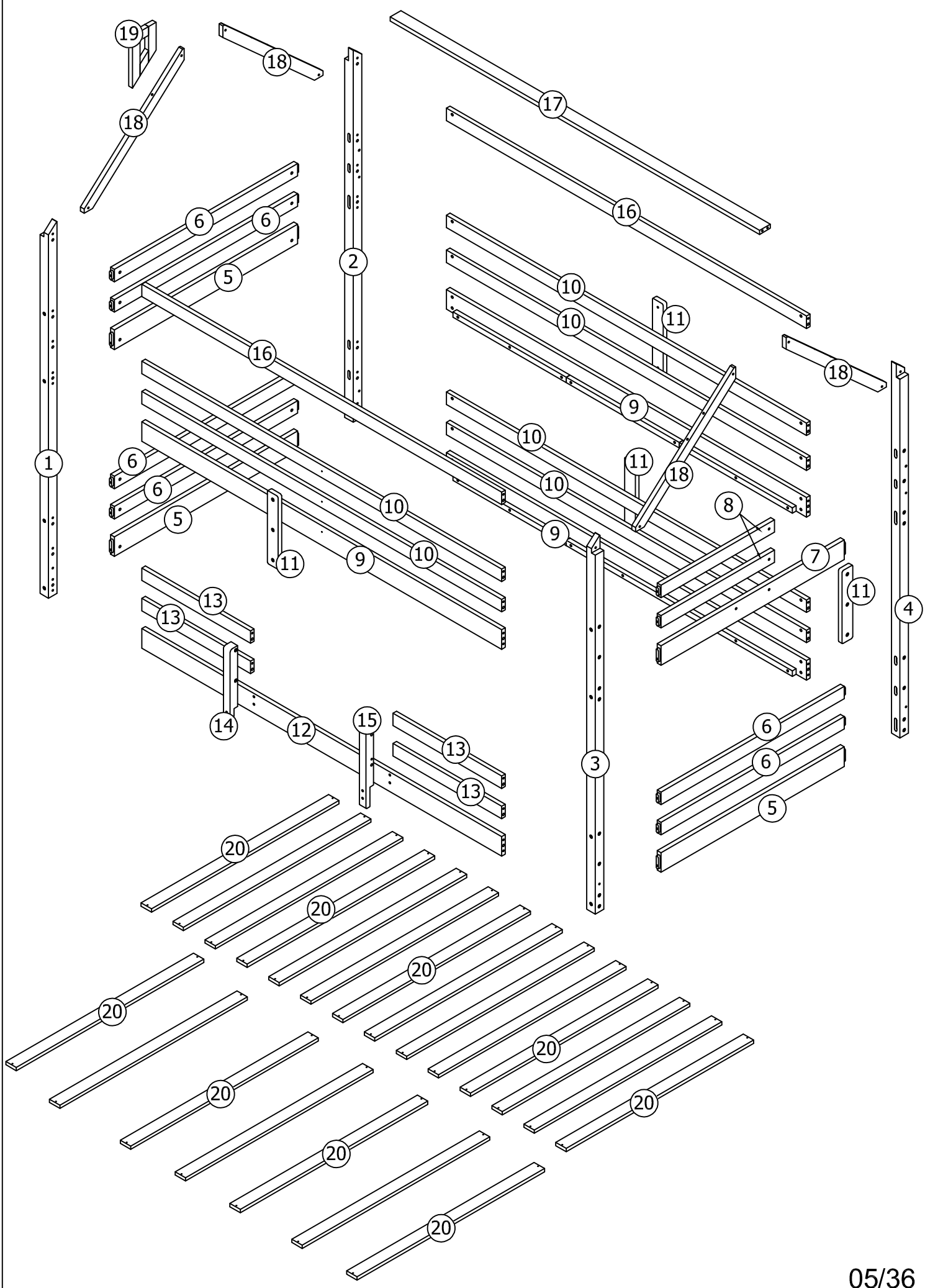
19
18
18
17
16
6
6
5
2
10
10
11
16
18
9
10
11
18
1
6
6
5
10
10
9
8
7
11
11
9
4
13
13
14
12
15
13
13
3
6
6
5
20
20
20
20
20
20
20
20
20

ASSEMBLY INSTRUCTION

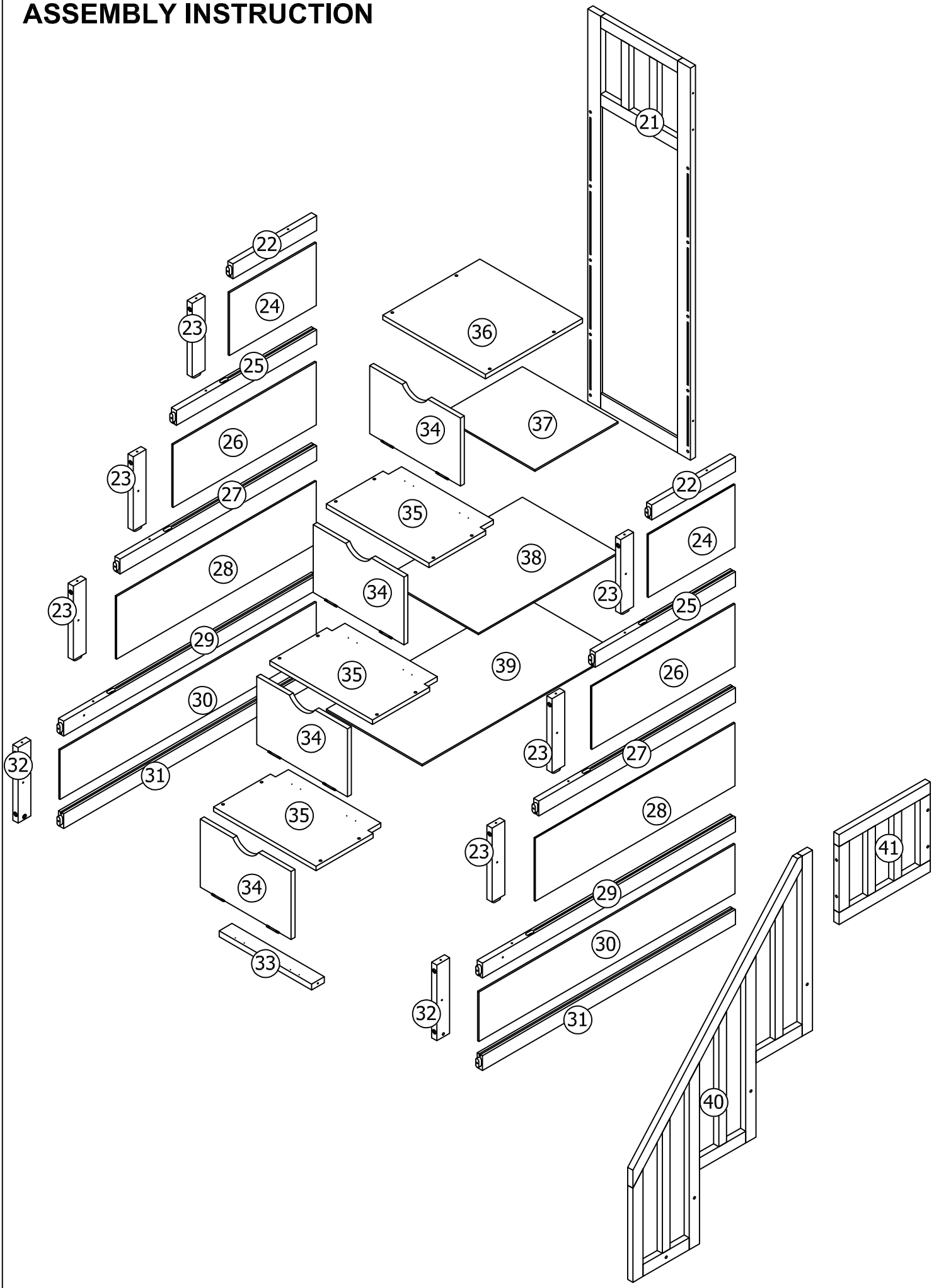

Part List (Box1- BSW09168-1)

1  Leg-1pc	2 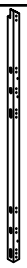 Leg-1pc	3  Leg-1pc
4  Leg-1pc	9 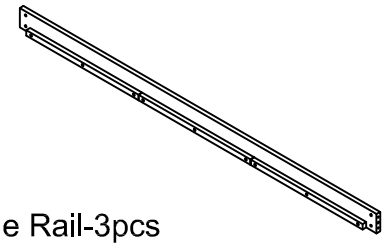 Side Rail-3pcs	10 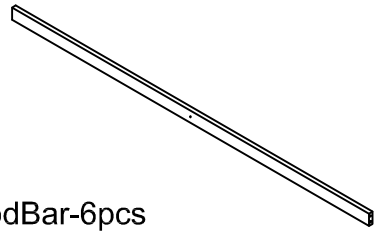 WoodBar-6pcs
12 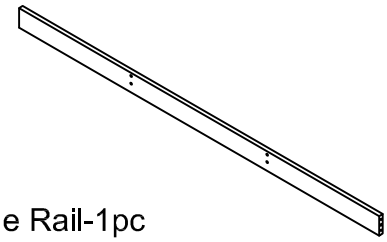 Side Rail-1pc	16 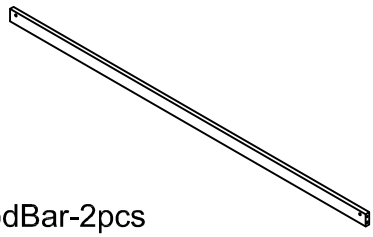 WoodBar-2pcs	17 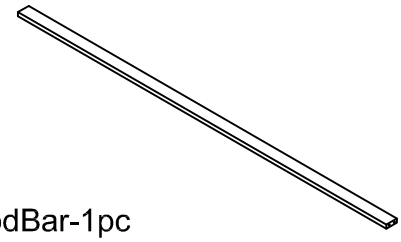 WoodBar-1pc

Part List & Hardware List (Box2 (BSW09168-2)

5 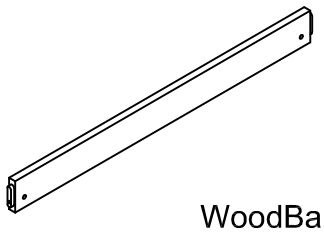 WoodBar-3pcs	6 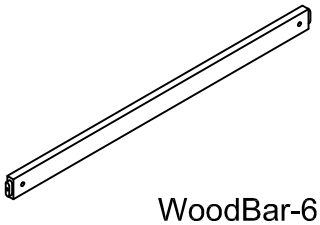 WoodBar-6pcs	7 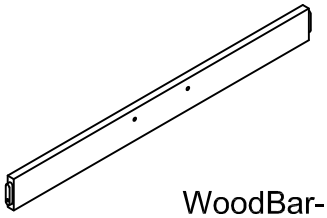 WoodBar-1pc
8 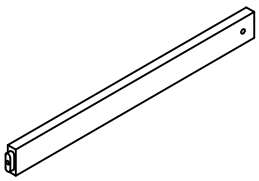 WoodBar-2pcs	11 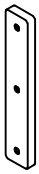 WoodBar-4pcs	13 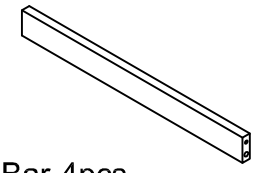 WoodBar-4pcs
14 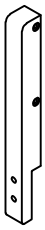 WoodBar-1pc	15  WoodBar-1pc	18 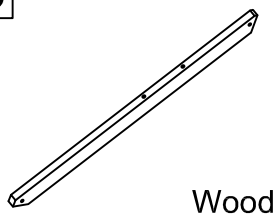 WoodBar-4pcs
19 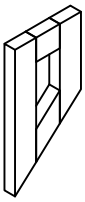 WoodBar-1pc	20 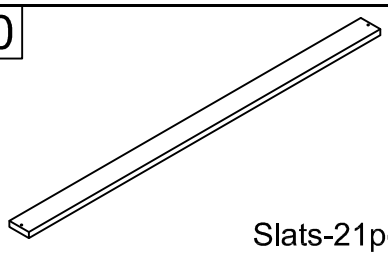 Slats-21pcs	21 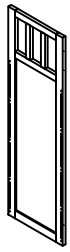 Panel-1pc
22 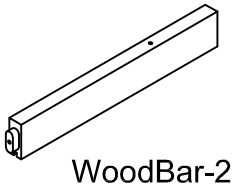 WoodBar-2pcs	23  WoodBar-6pcs	24 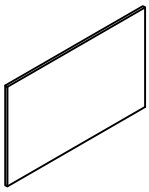 Panel-2pcs
25 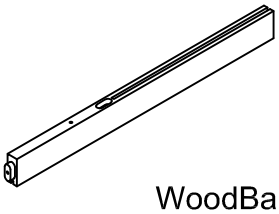 WoodBar-2pcs	26 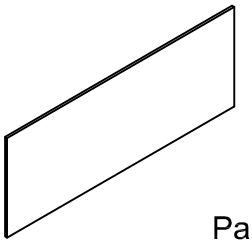 Panel-2pcs	27 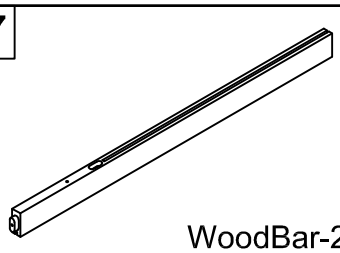 WoodBar-2pcs
28 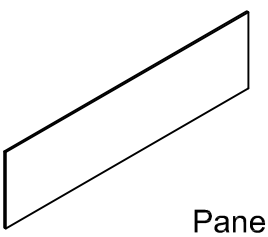 Panel-2pcs	29 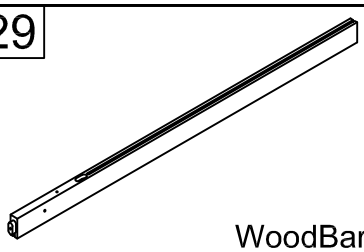 WoodBar-2pcs	30 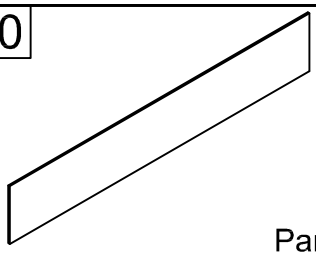 Panel-2pcs

Part List & Hardware List (Box2 (BSW09168-2)

31 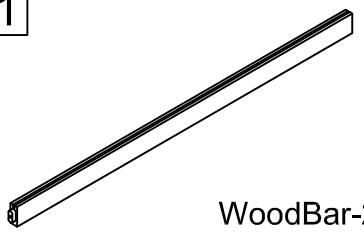 WoodBar-2pcs	32  WoodBar-2pcs	33 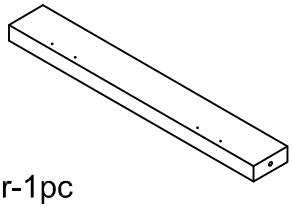 WoodBar-1pc
34 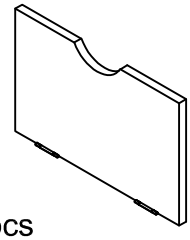 Panel-4pcs	35 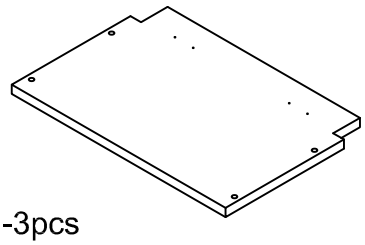 Panel-3pcs	36 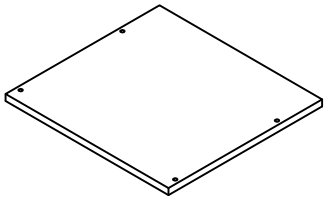 Panel-1pc
37 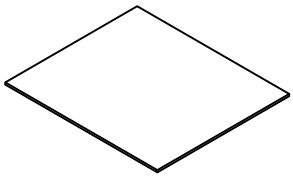 Panel-1pc	38 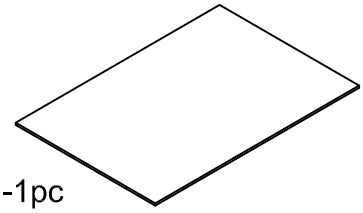 Panel-1pc	39 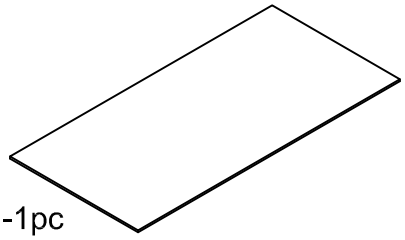 Panel-1pc
40 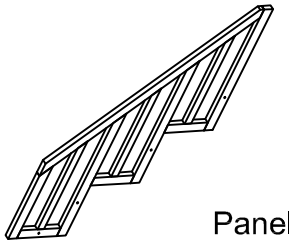 Panel-1pc	41 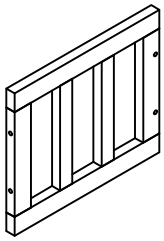 Panel-1pc	42  fabric -1 pc

Hardware List (Box2-BSW09168-2)

A 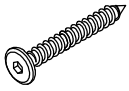 Screws 1/4" x30mm- 9pcs	B  Screws 1/4" x40mm- 34pcs	C 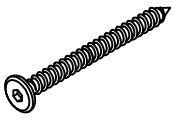 Screws 1/4" x60mm- 21pcs
D 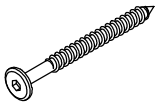 Screws 1/4" x70mm- 5pcs	E  Bolts Ø1/4" x 30 mm - 7pcs	F 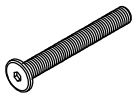 Bolts Ø1/4" x 60 mm - 4pcs
G 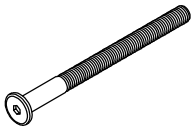 Bolts Ø1/4" x 90 mm - 51pcs	H  Ø1/4" x 13 mm Horizontal-Hole bolts - 59pcs	I 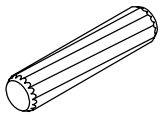 Wood dowel Ø10 x 40 mm -32pcs
J 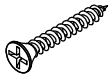 Wood Screws M4 x 30mm- 42pcs	K 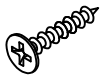 Wood Screws M3 x15mm-24pcs	L 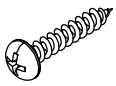 Wood Screws M4x 15mm - 16pcs
M 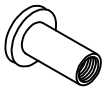 Ø1/4" x 15 mm Canopy head though - 7pcs	N 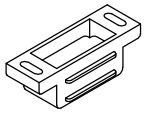 Magnet Door Catcher -8pcs	O 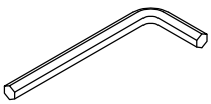 Allen Key - 2pcs
P 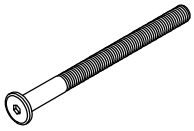 Bolts Ø1/4" x 80 mm - 4pcs		

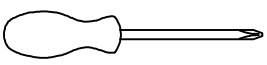

Assembly Tools Required (Not Included)

STEP 1:

H	G
8(pcs)	8(pcs)

OPTION 1

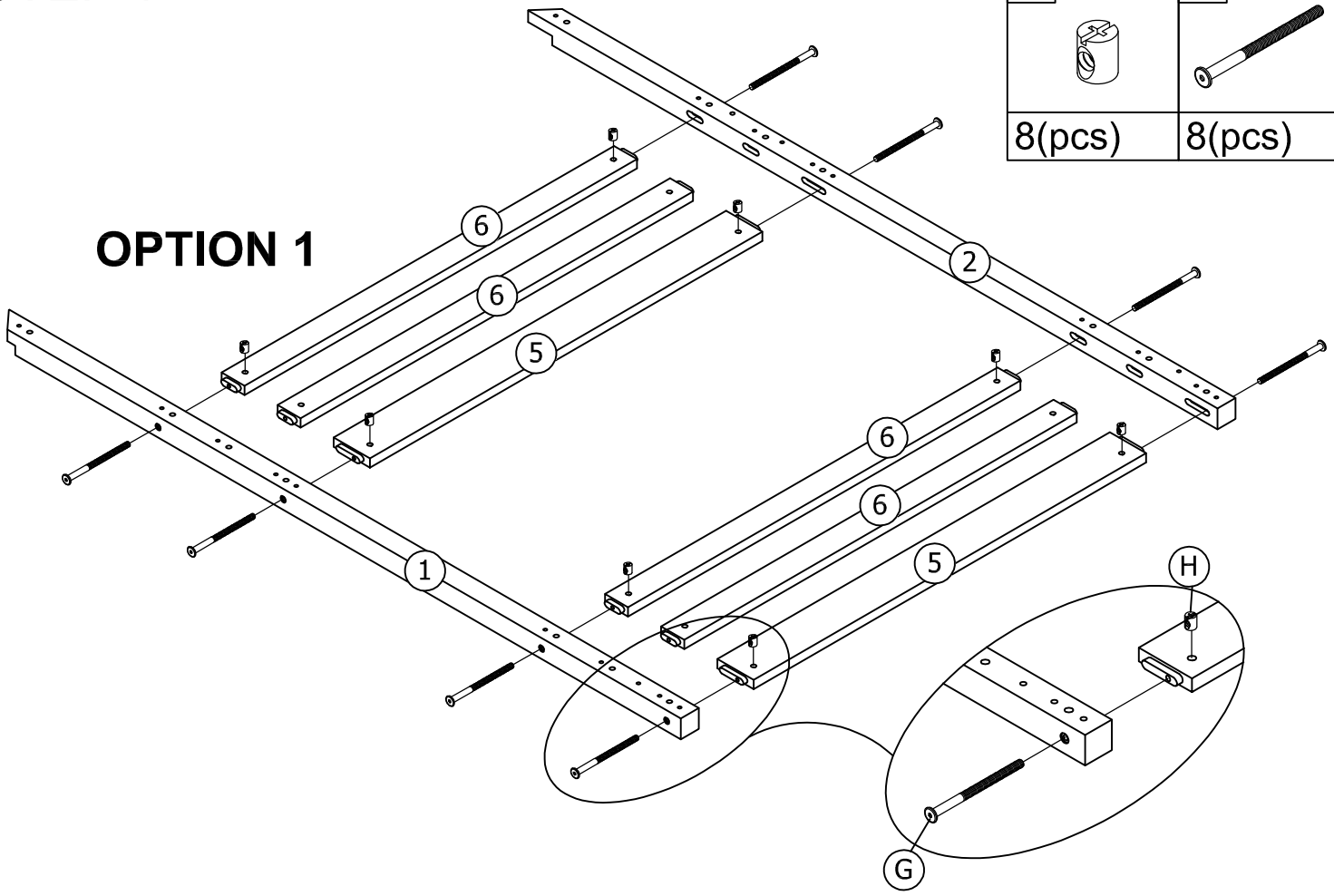

STEP 1:

H	G
6(pcs)	6(pcs)

OPTION 2

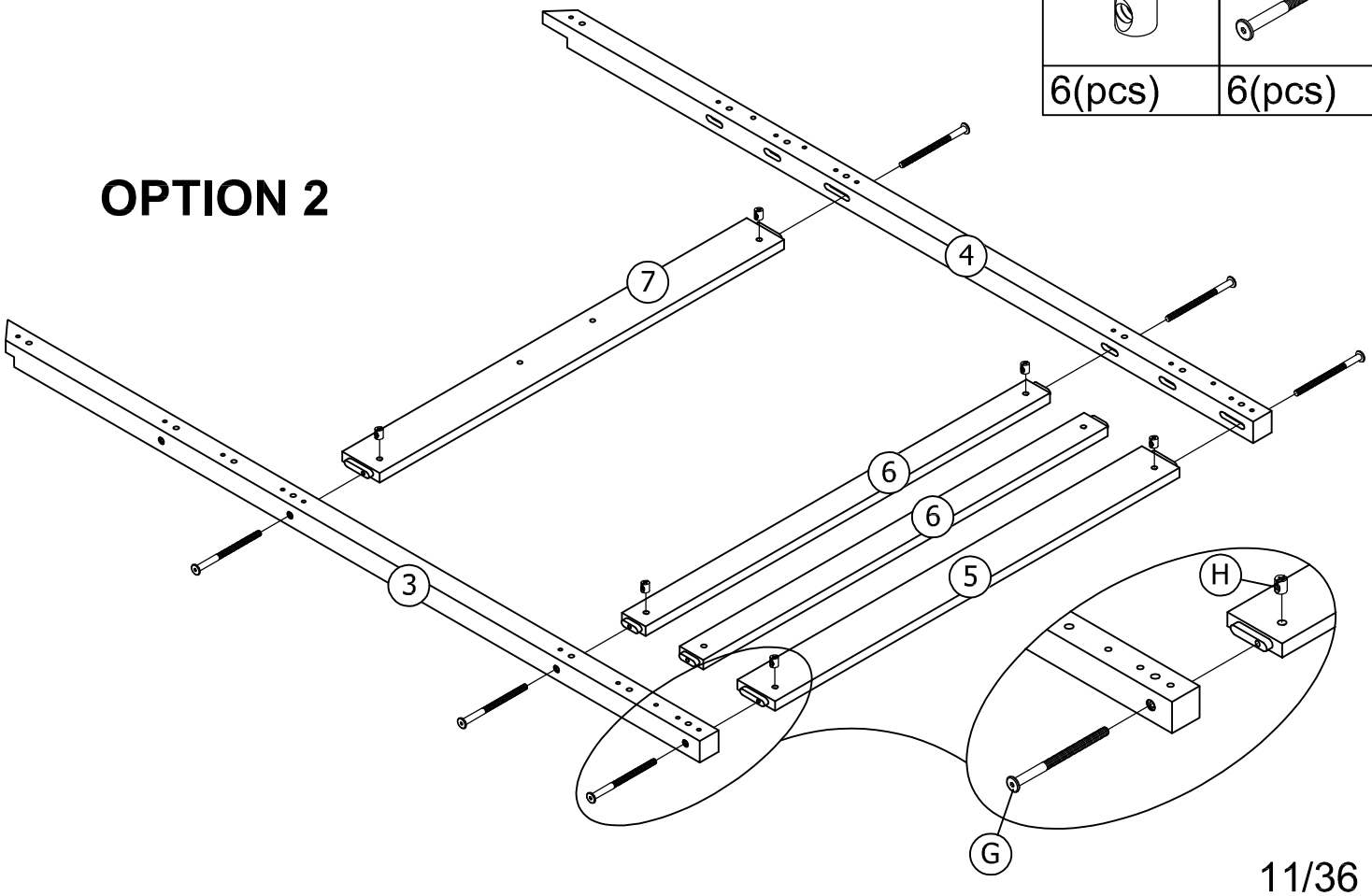

STEP 2:

H	G
6(pcs)	6(pcs)

OPTION 1

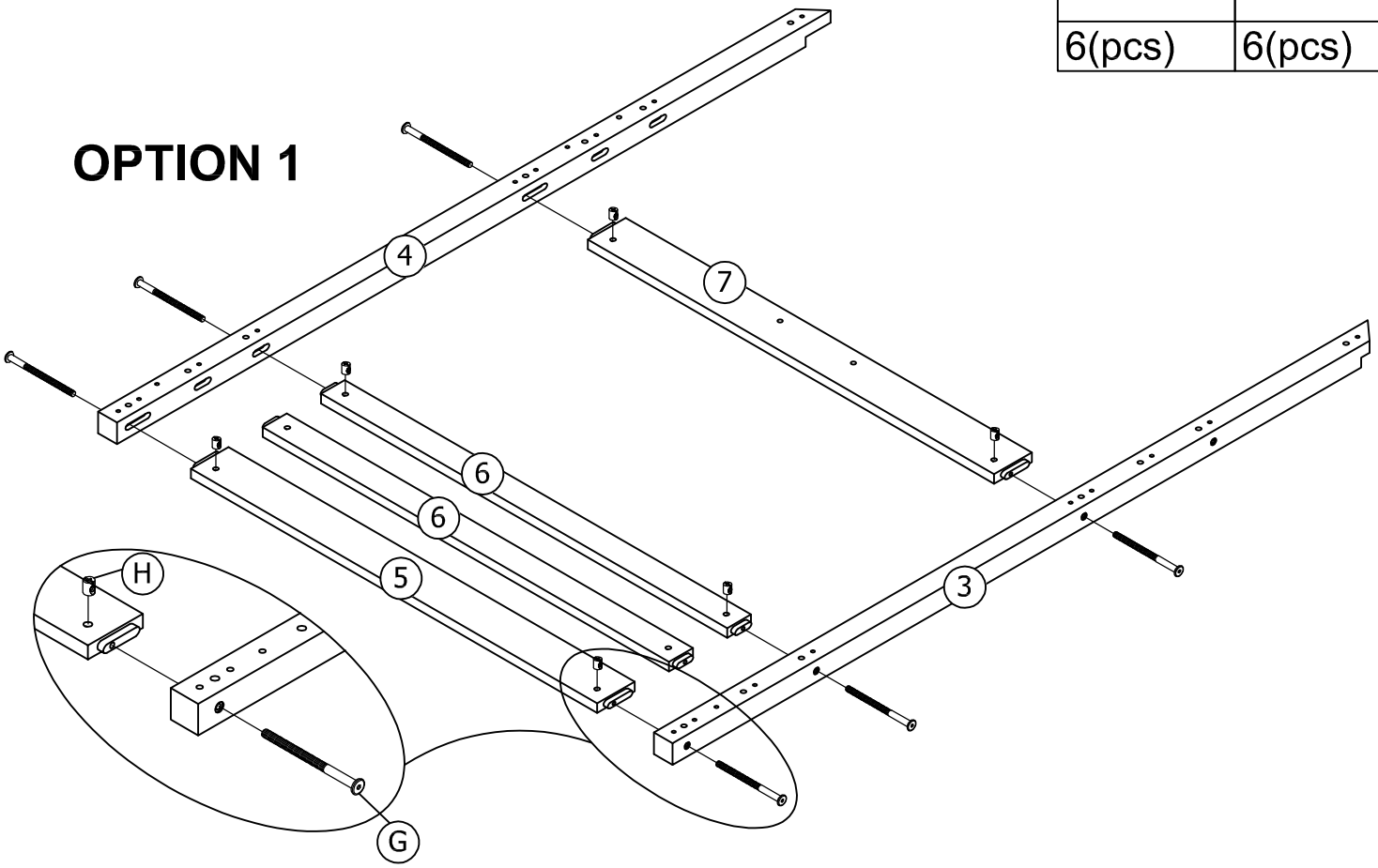

STEP 2:

H	G
8(pcs)	8(pcs)

OPTION 2

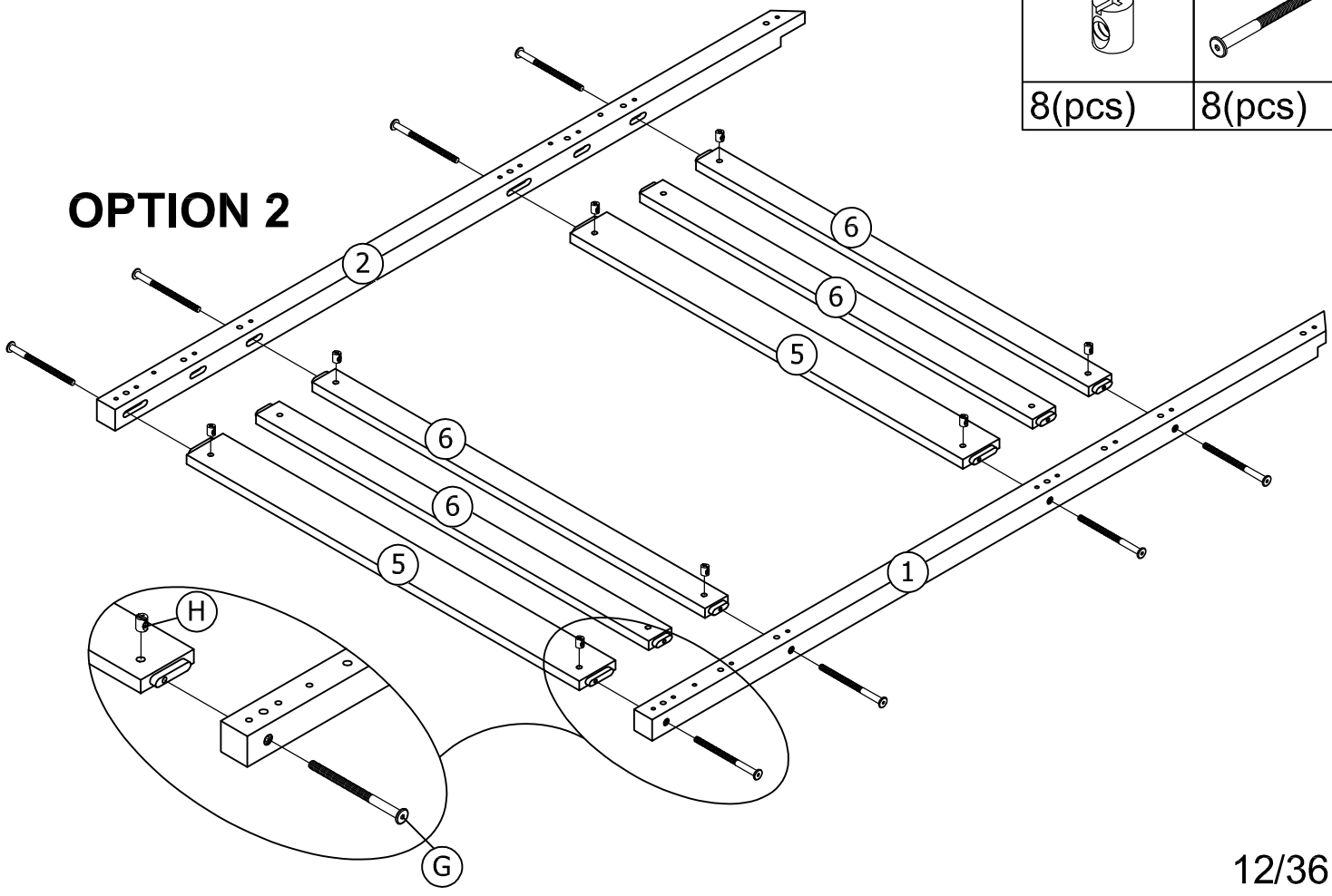

STEP 3:

OPTION 1

H	G	I
	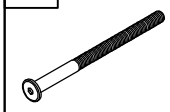	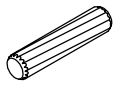
28(pcs)	28(pcs)	24(pcs)

STEP 3:

H	G
	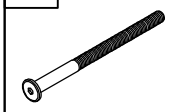
28(pcs)	28(pcs)

I
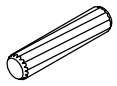
24(pcs)

OPTION 2

STEP 4:

P	H	G
		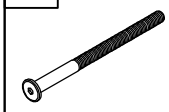
4(pcs)	8(pcs)	4(pcs)

I
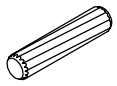
8(pcs)

STEP 5:

M	E
	
4(pcs)	4(pcs)

STEP 6:

G	M	E	H
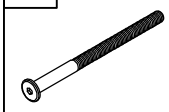			
1(pc)	3(pcs)	3(pcs)	1(pc)

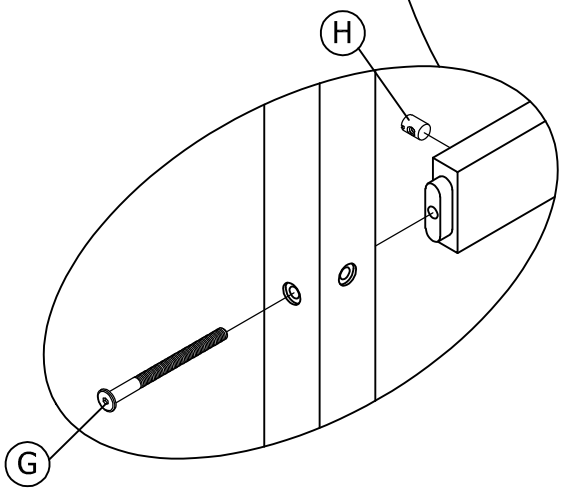

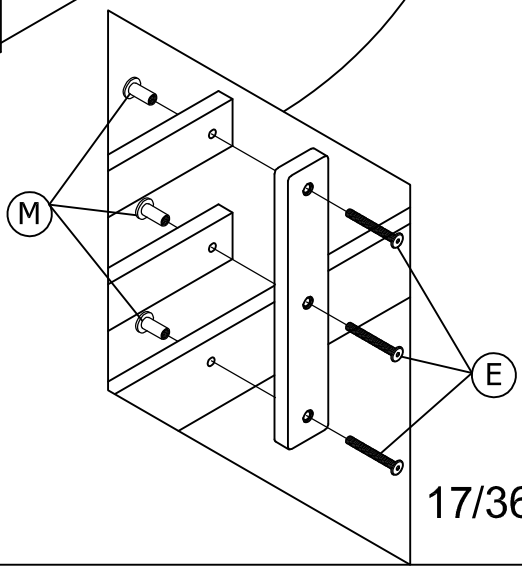

STEP 7:

A	
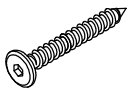	
9(pcs)	

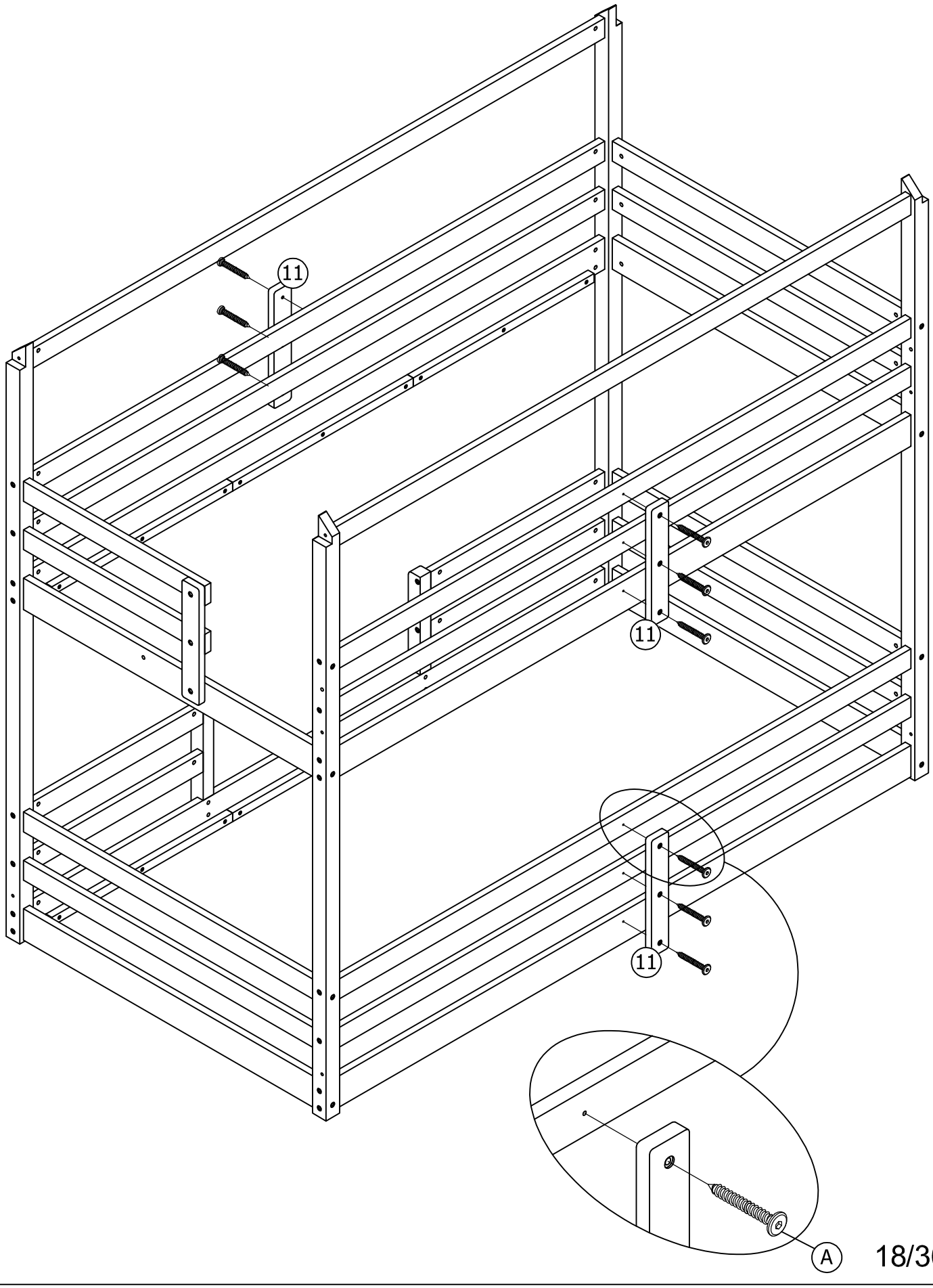

STEP 8:

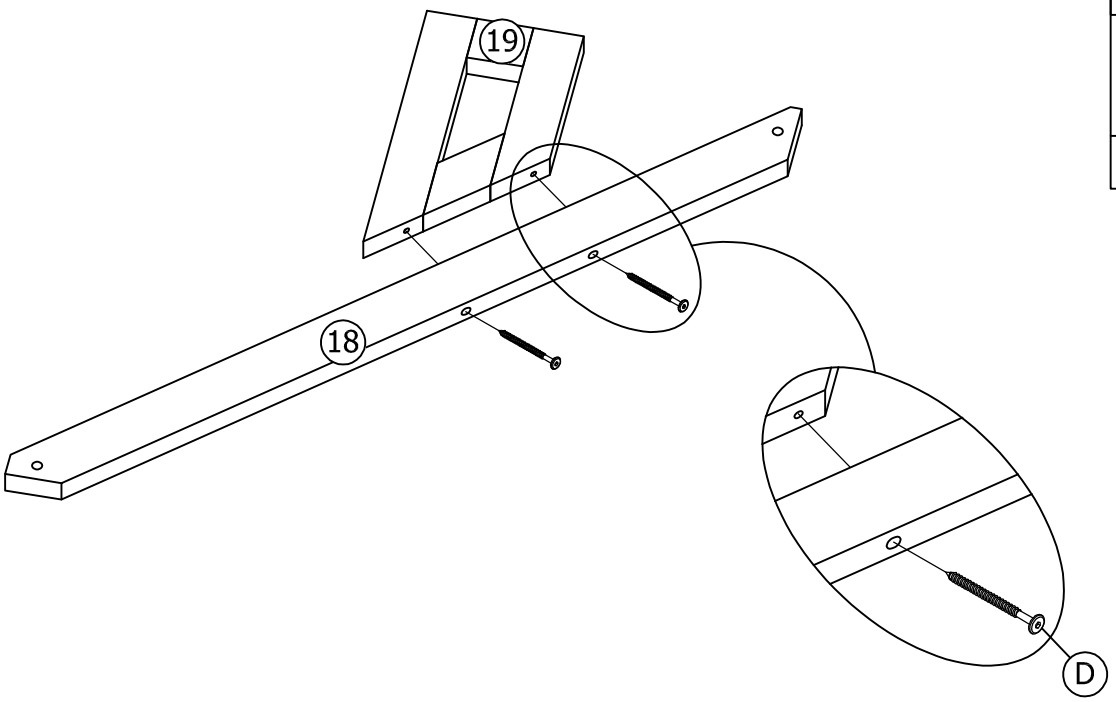

D	
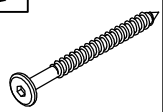	
2(pcs)	

STEP 9:

H	F
	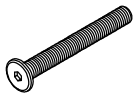
4(pcs)	4(pcs)

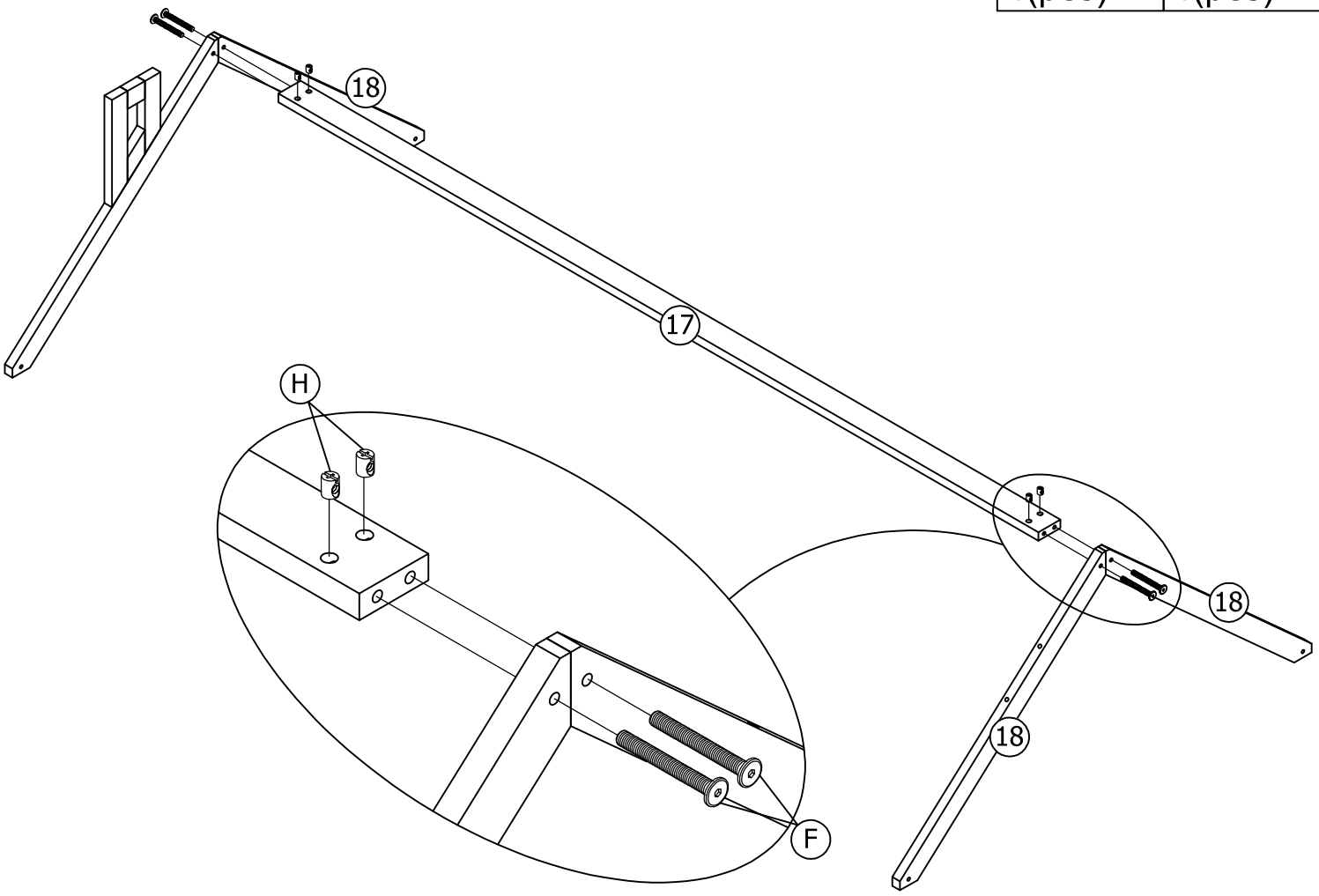

STEP 10:

H	G
	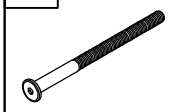
4(pcs)	4(pcs)

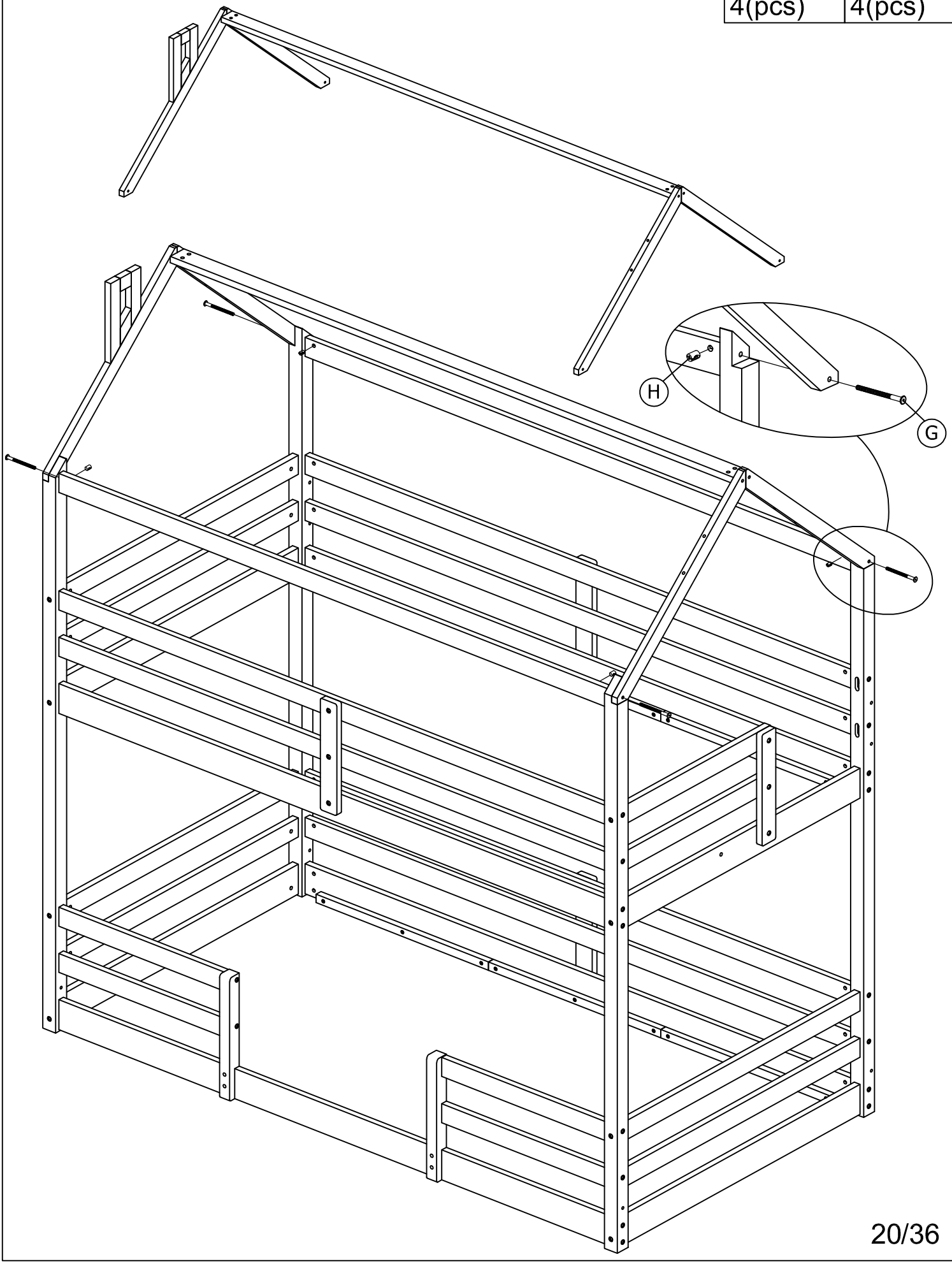

STEP 11:

J	
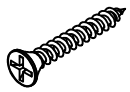	
42(pcs)	

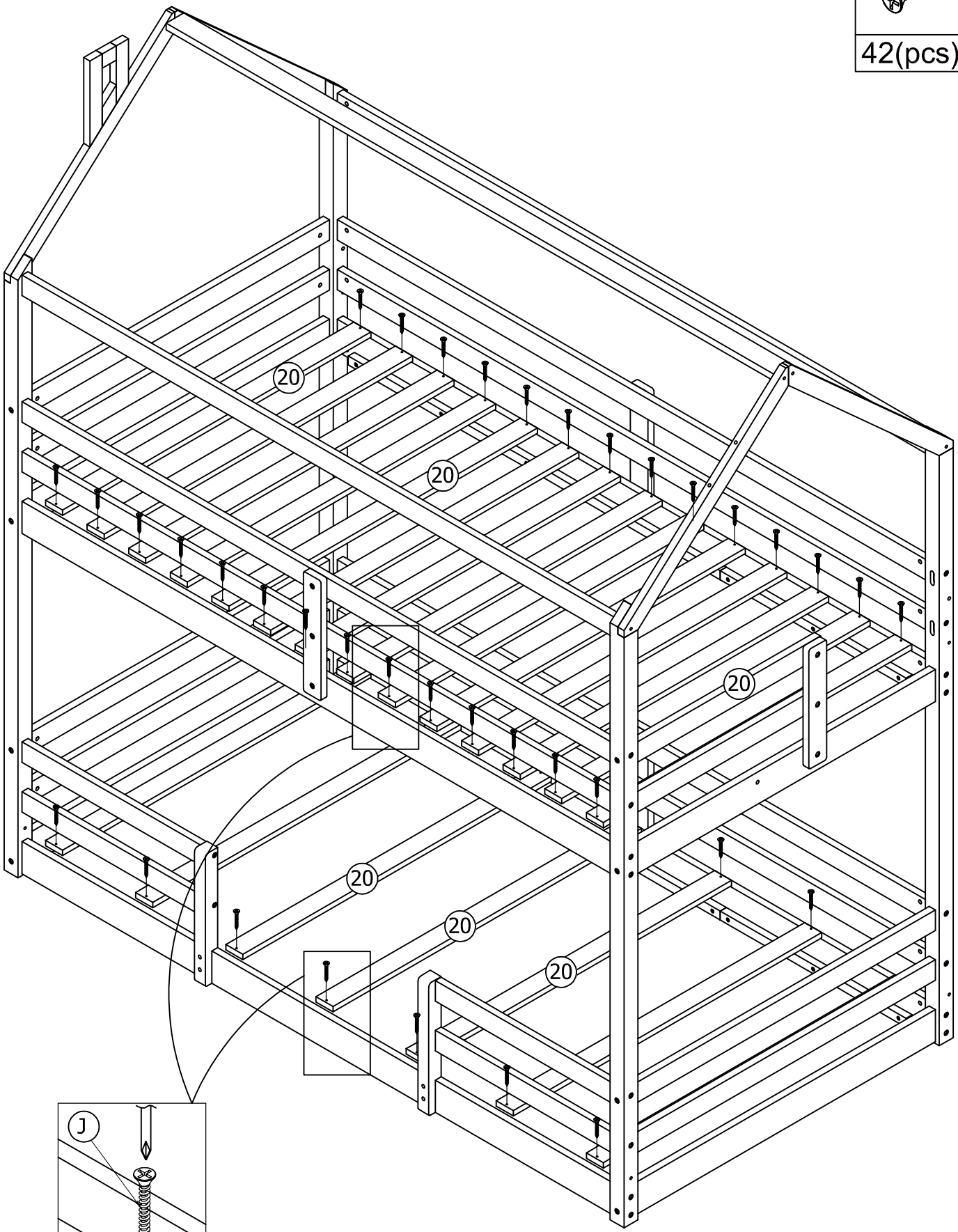

STEP 12:

C



12(pcs)

X2

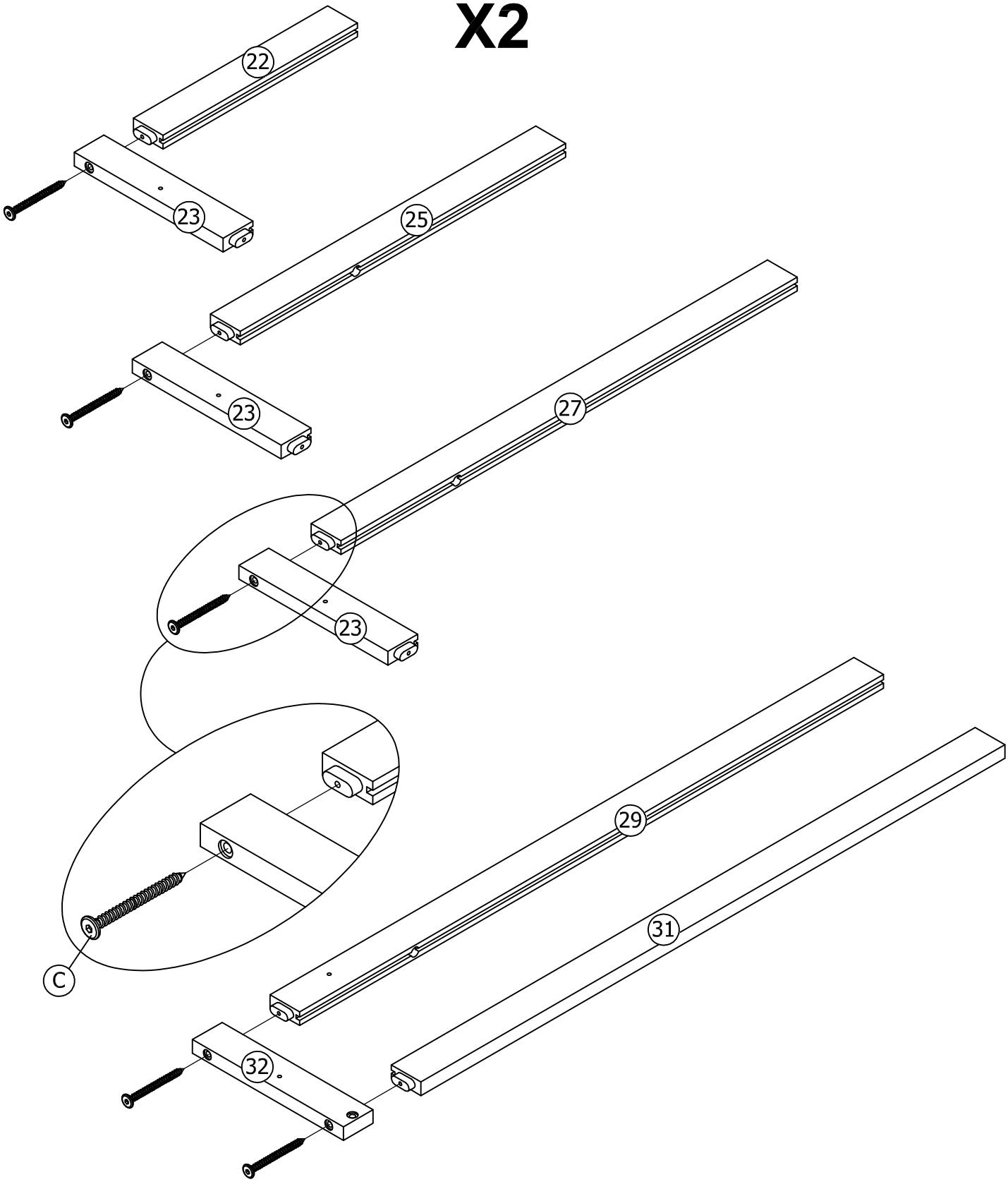

STEP 13:

C

6(pcs)

X2

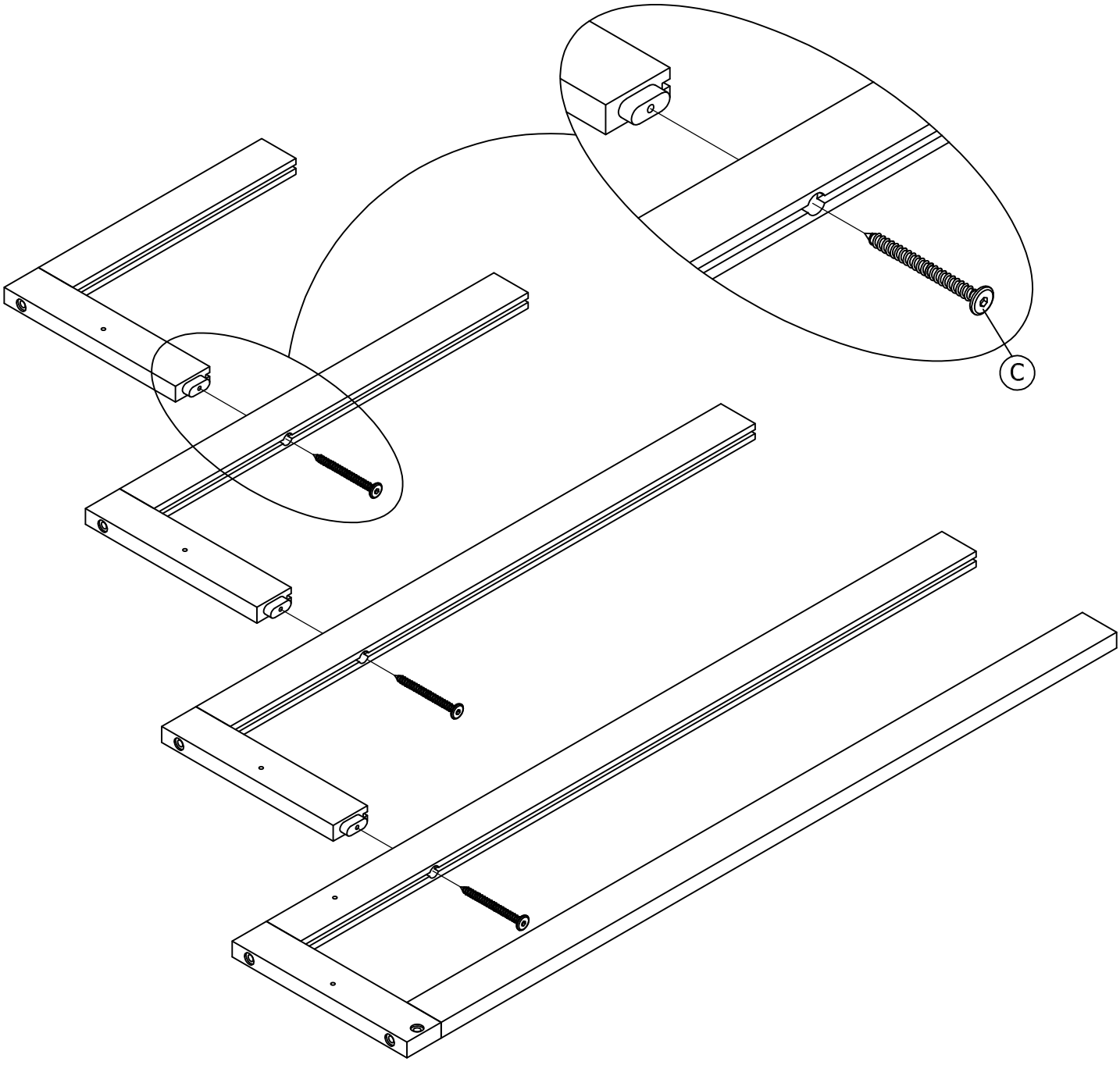

STEP 14:

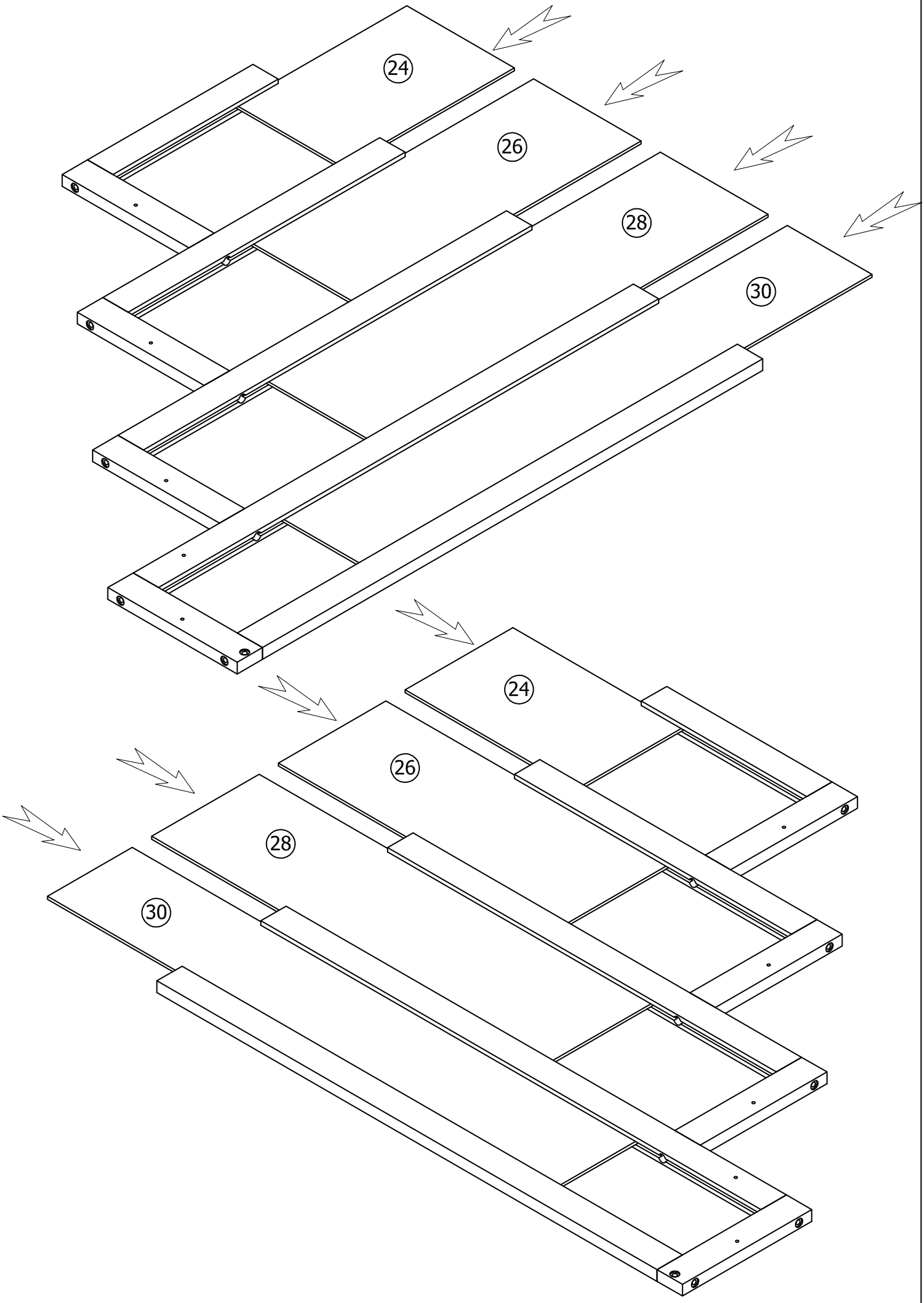

STEP 15:

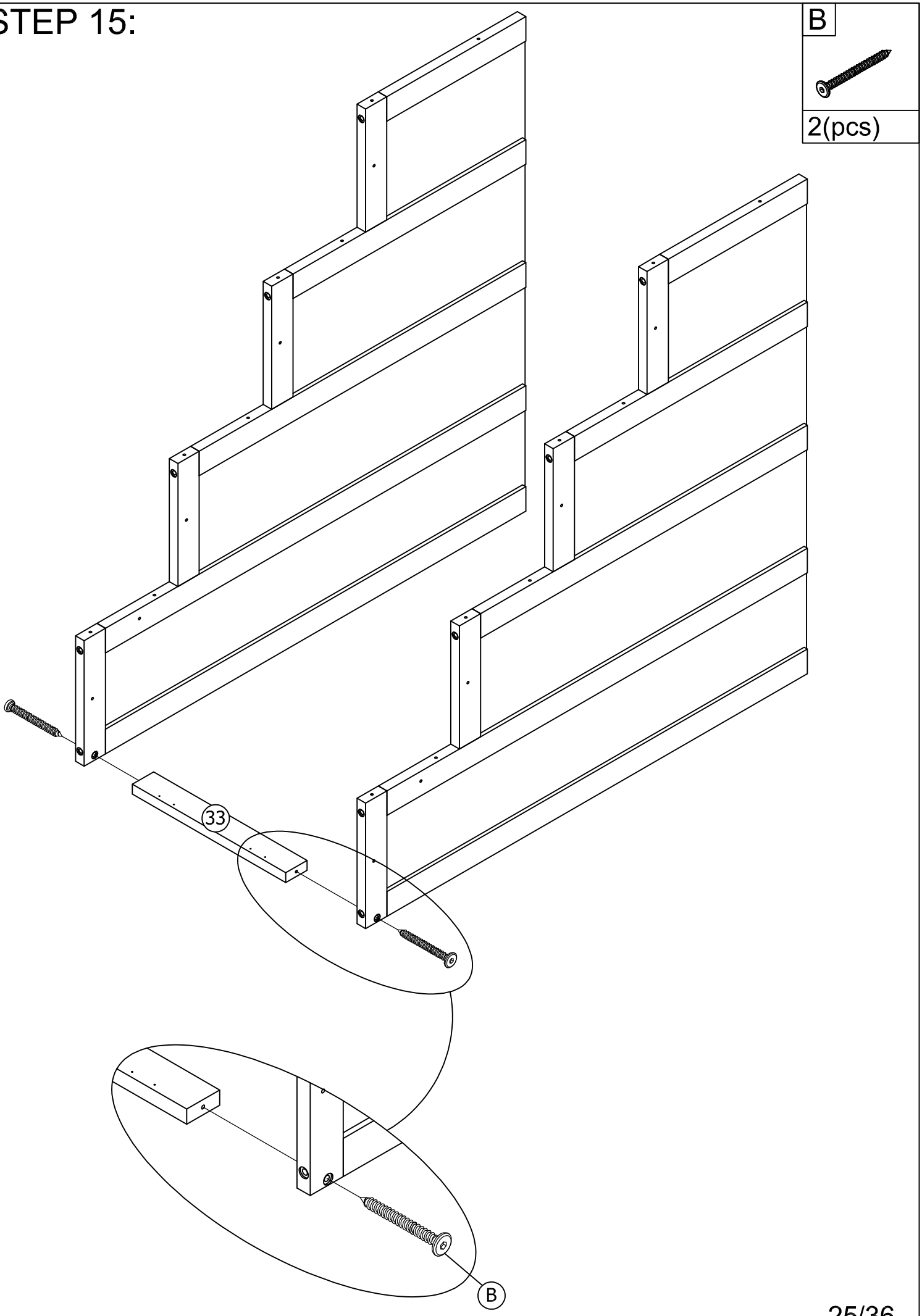

STEP 16:

B

10(pcs)

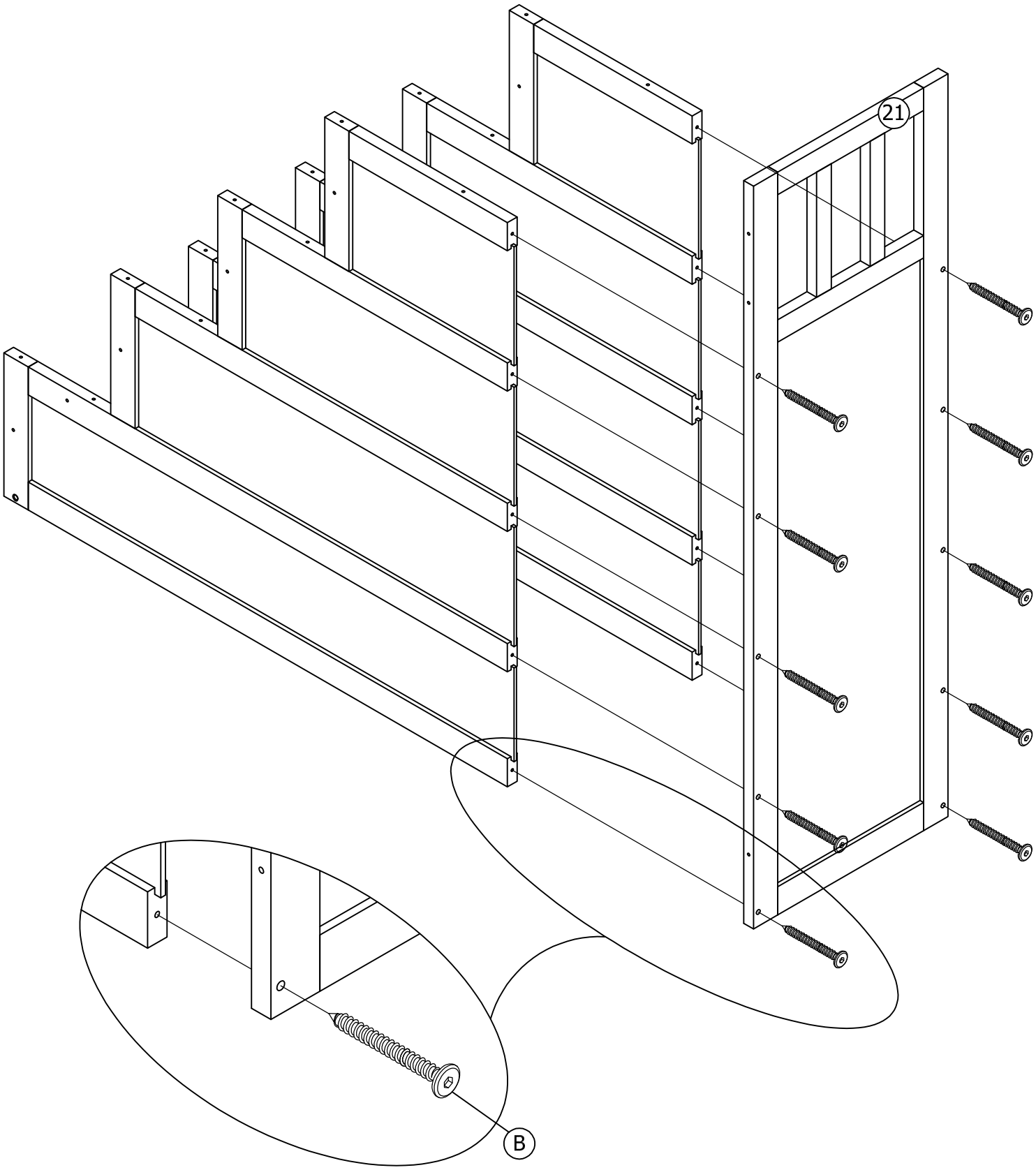

STEP 17:

N	L
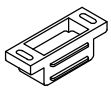	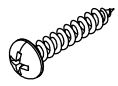
8(pcs)	16(pcs)

STEP 18:

B

16(pcs)

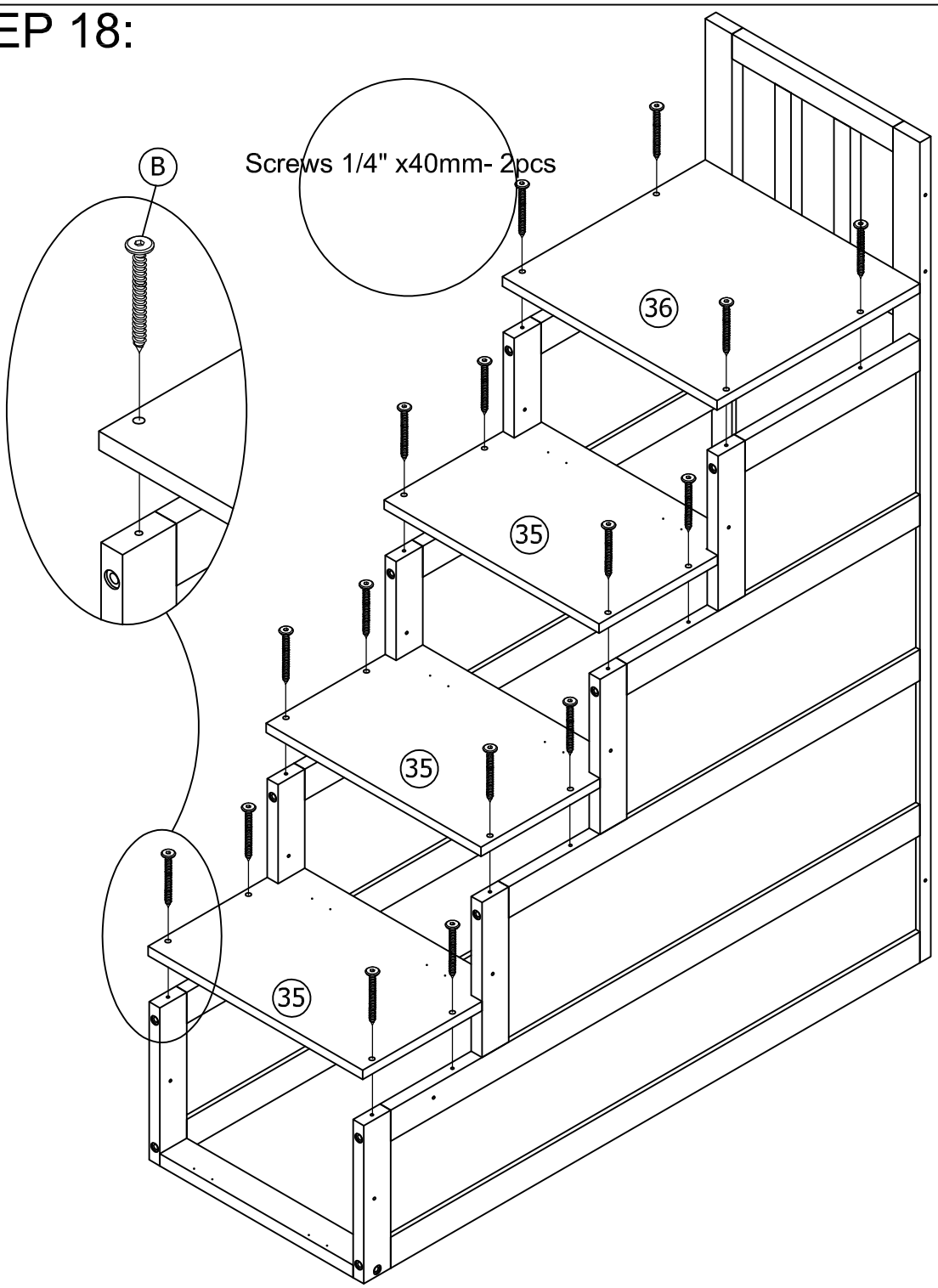

STEP 19:

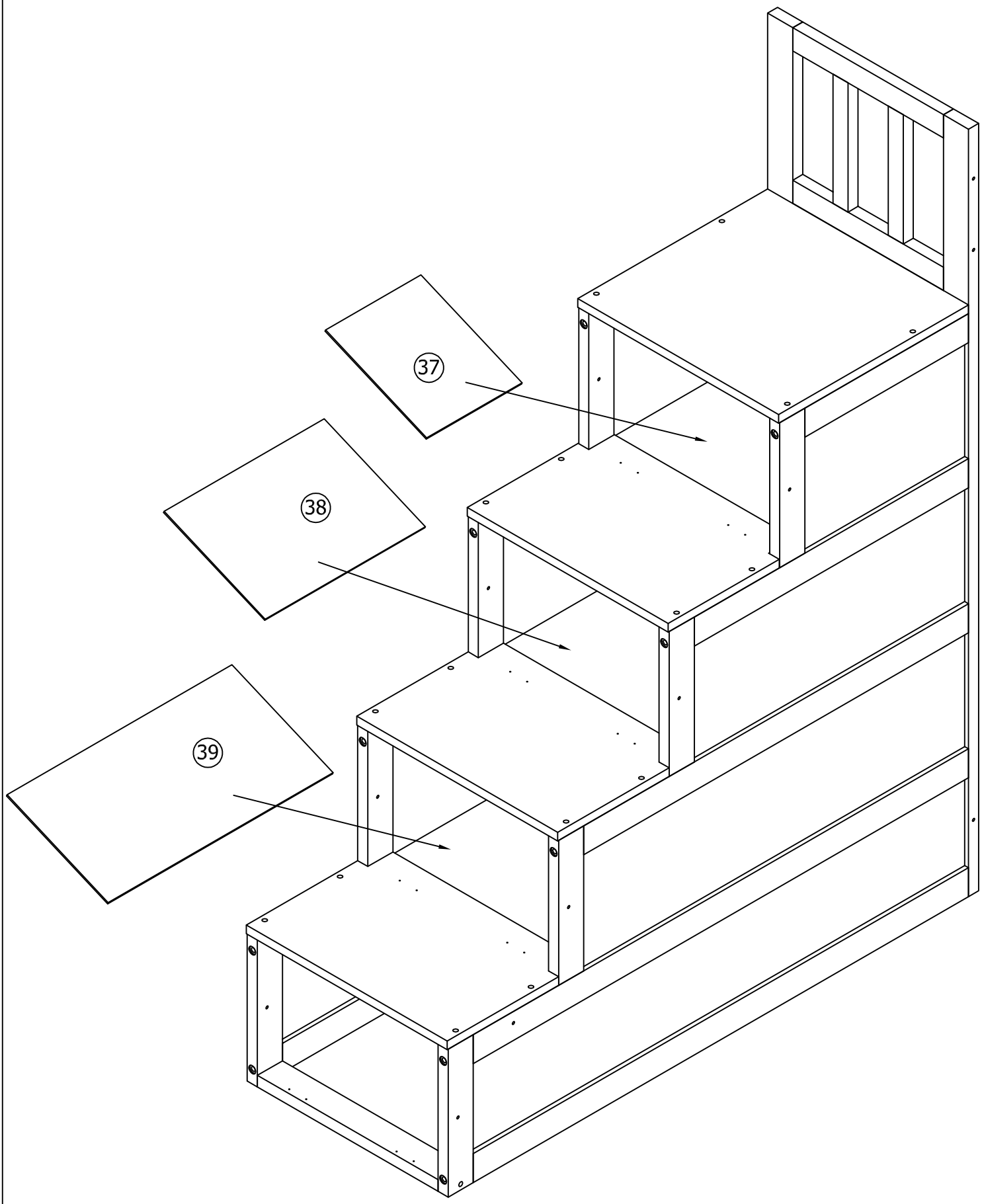

STEP 20:

K
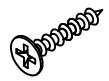
24(pcs)

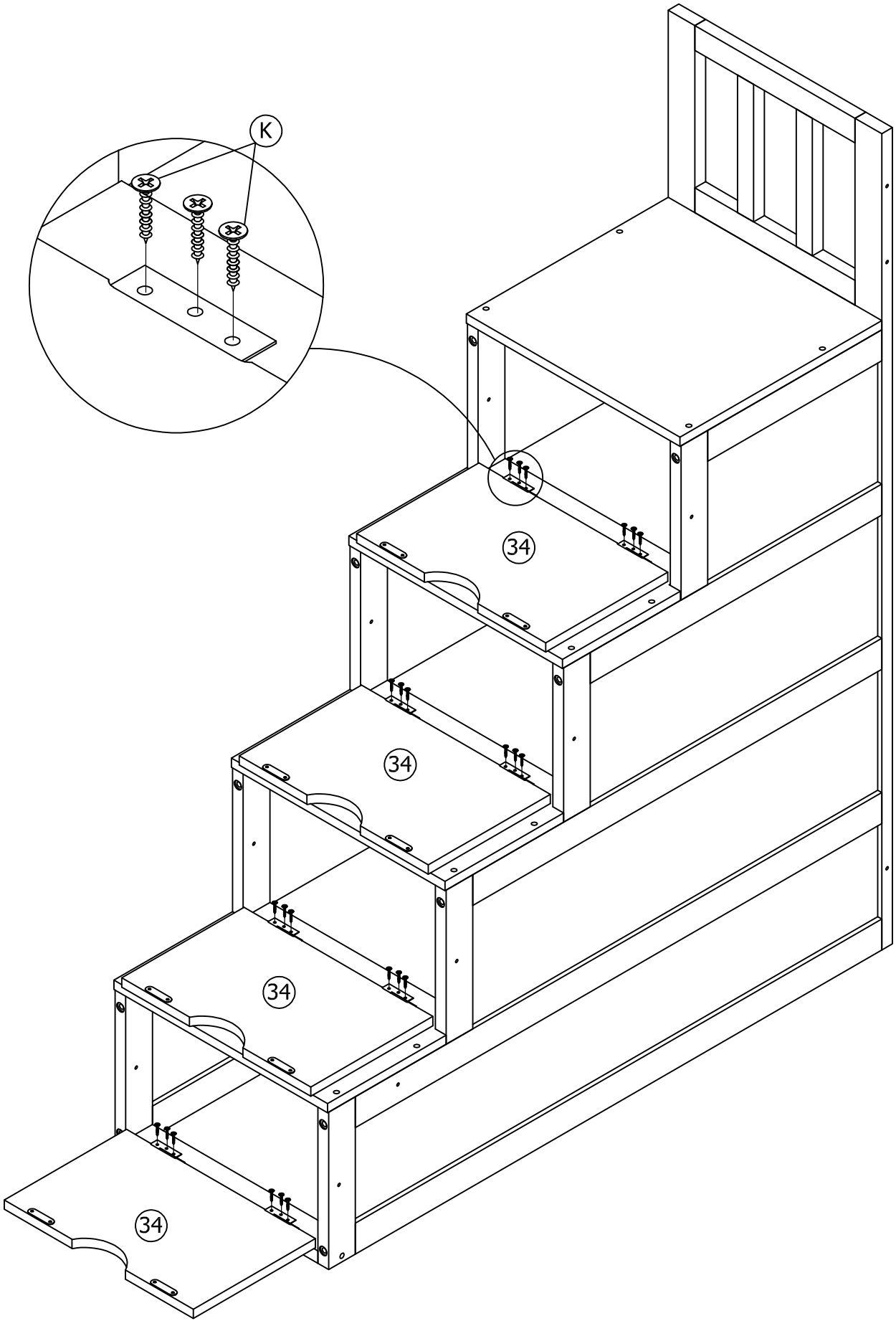

STEP 21:

C	B
	
2(pcs)	6(pcs)

OPTION 1

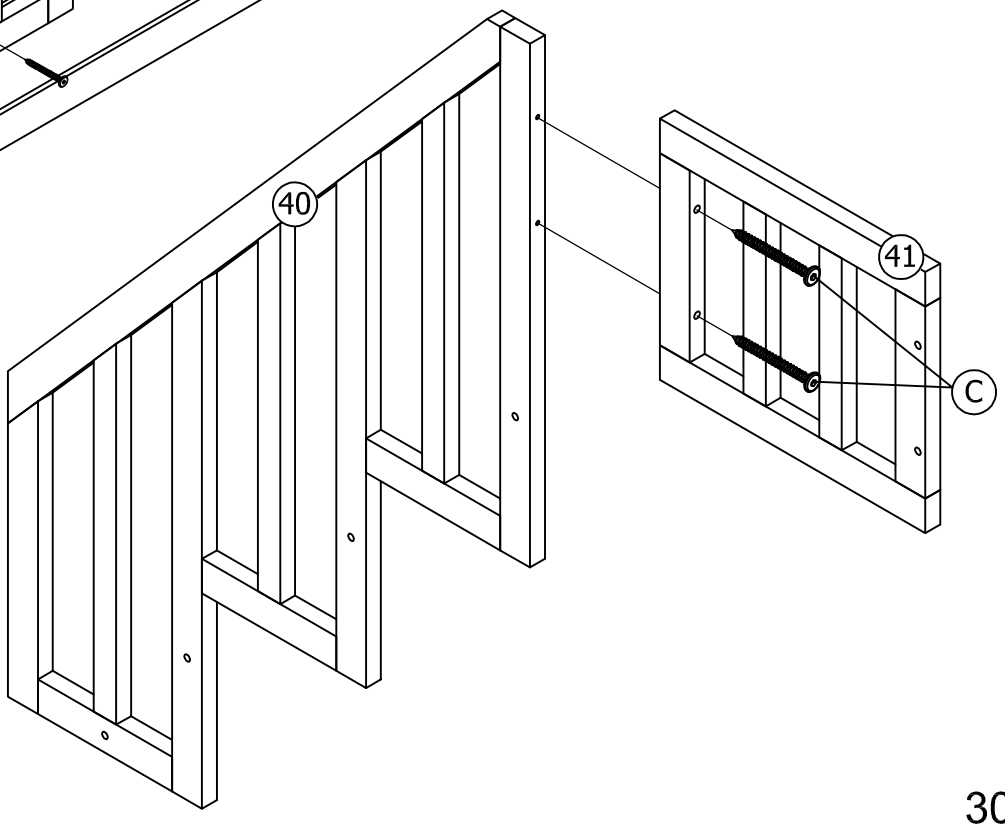

STEP 21:

C	B
2(pcs)	6(pcs)

OPTION 2

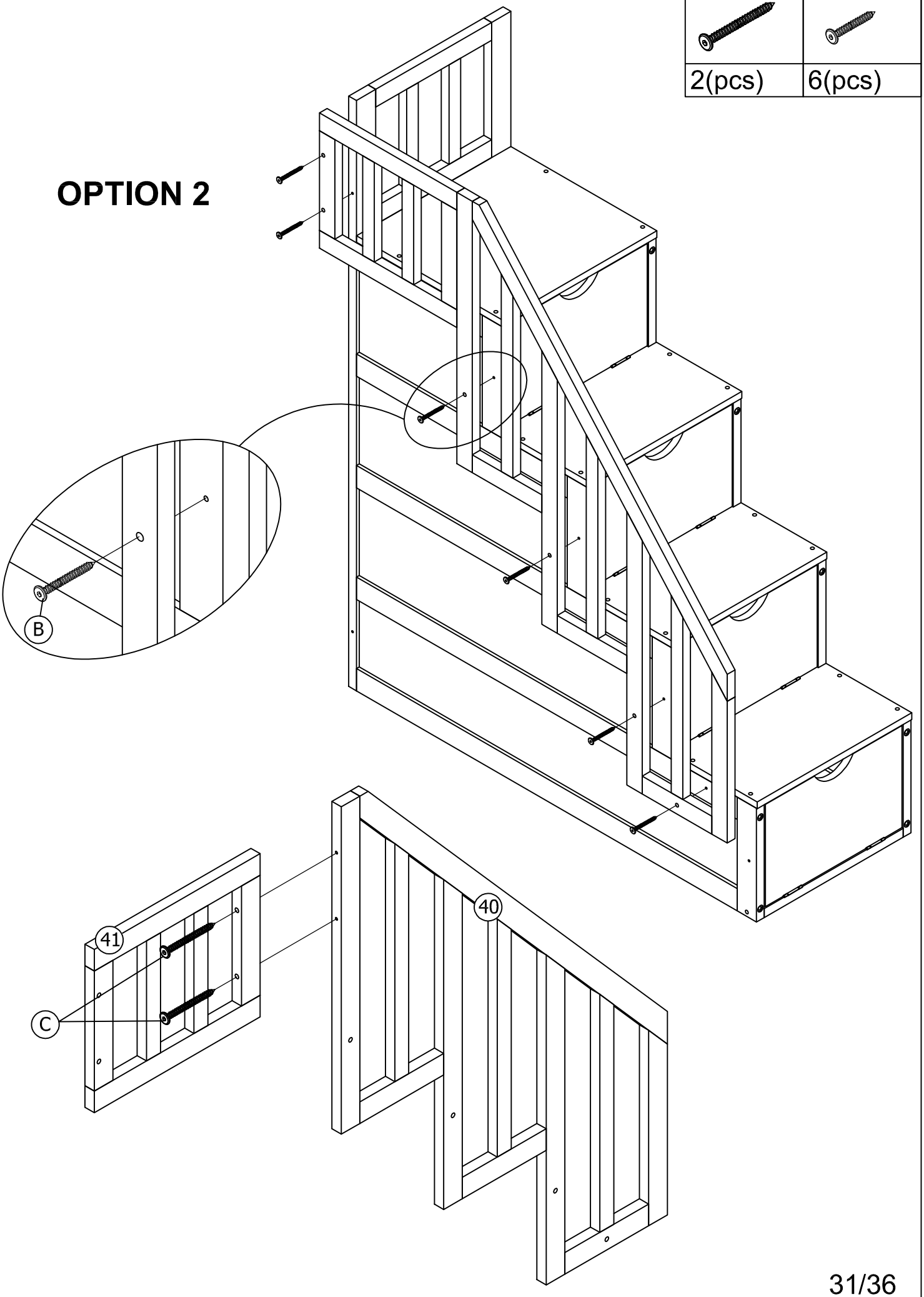

STEP 22:

D	C
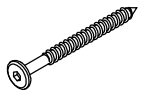	
3(pcs)	1(pc)

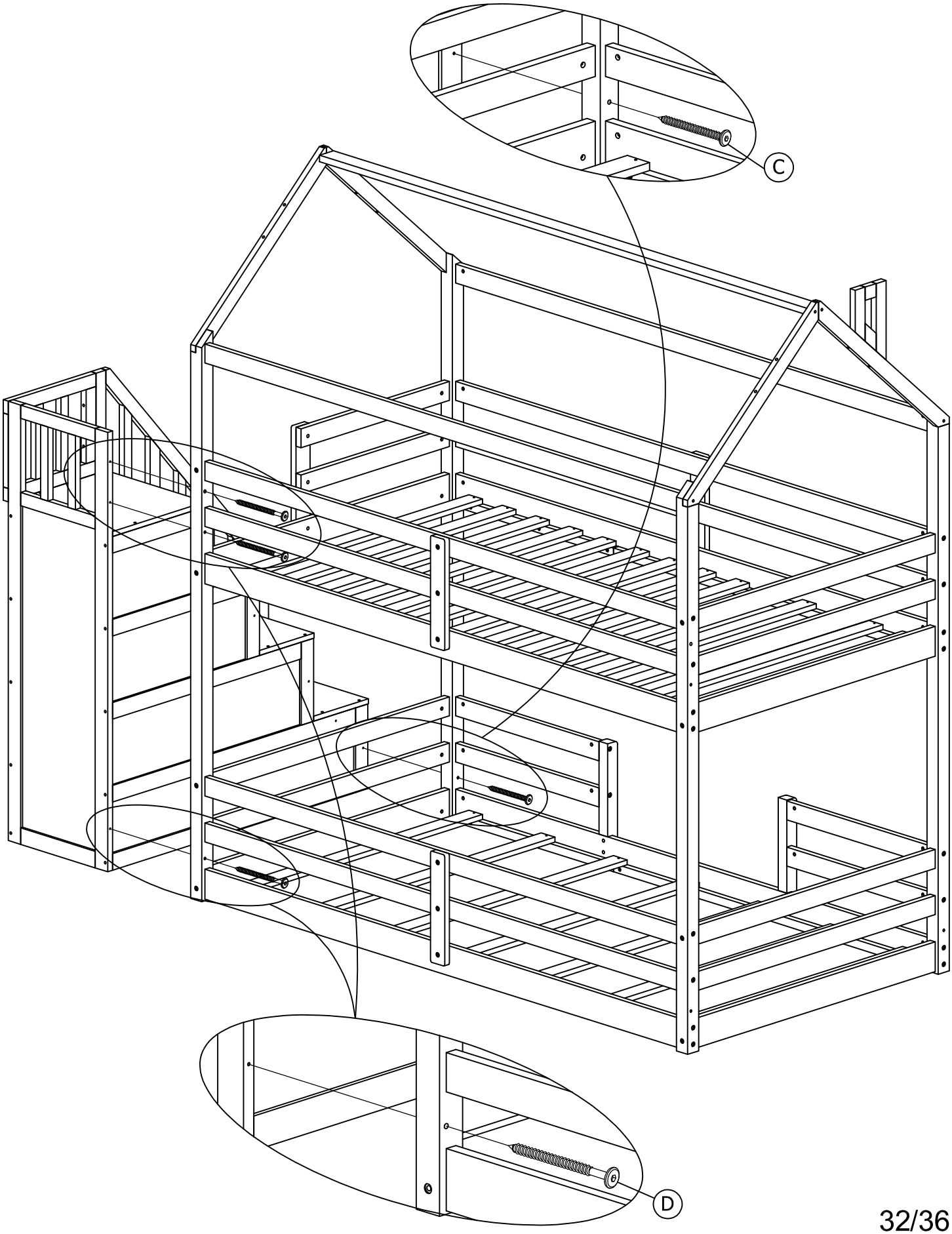

STEP 22:

42



1(pc)

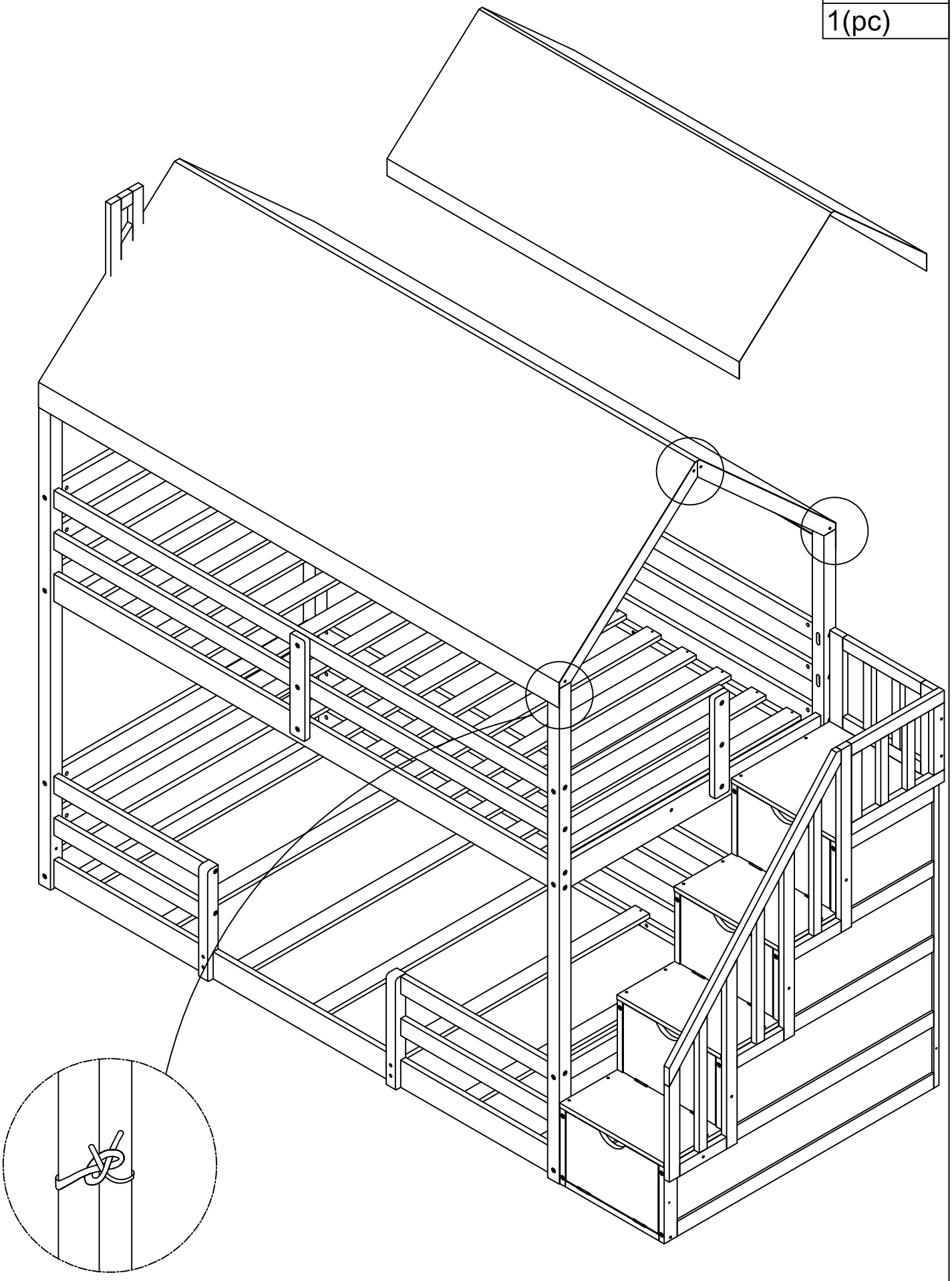

STEP 22:

42



1(pc)

FINISH: OPTION 1

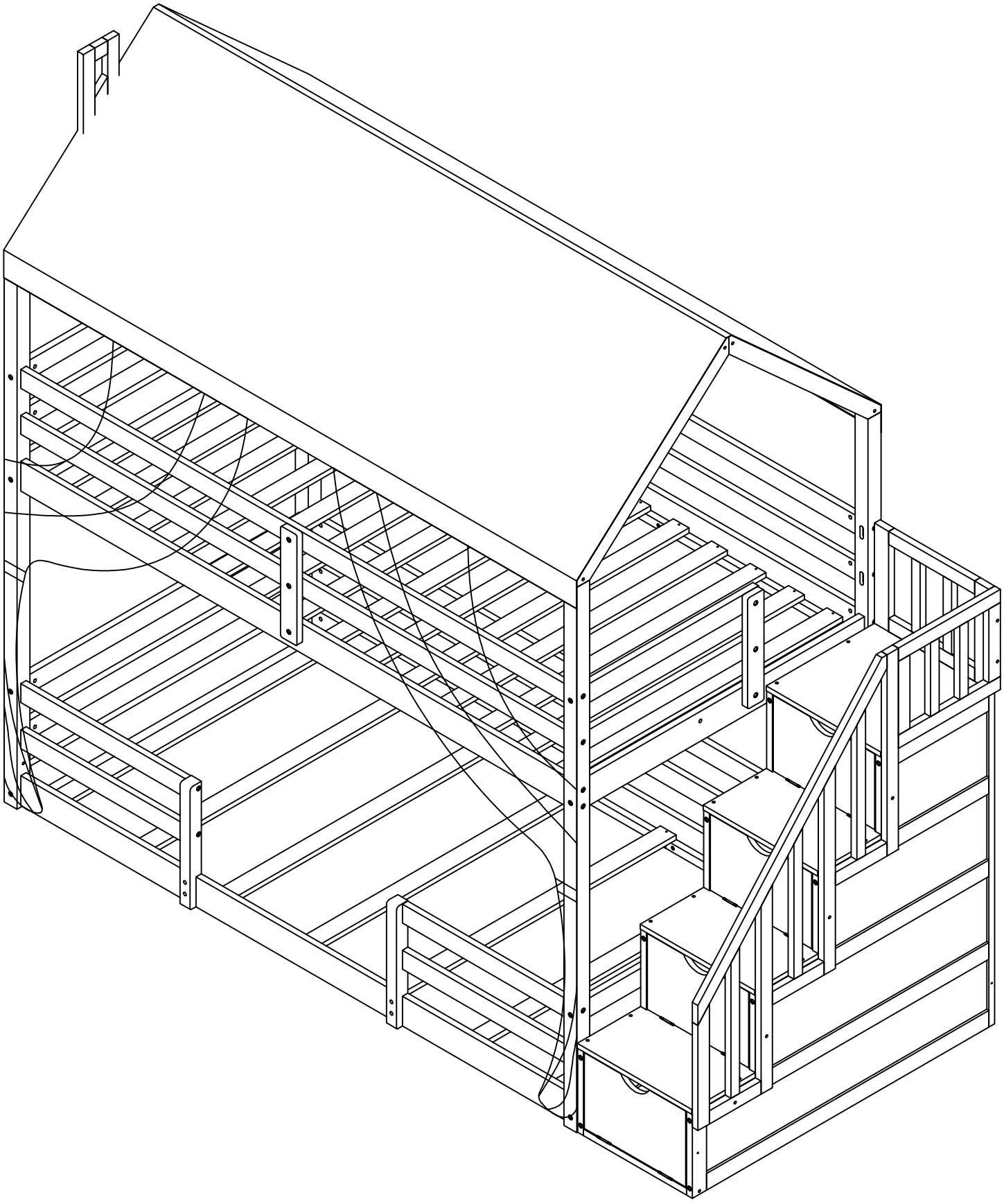

FINISH: OPTION 2

