Produktanleitung(DE)
Noticed'emploi(FR)
Instructionmanual(EN)

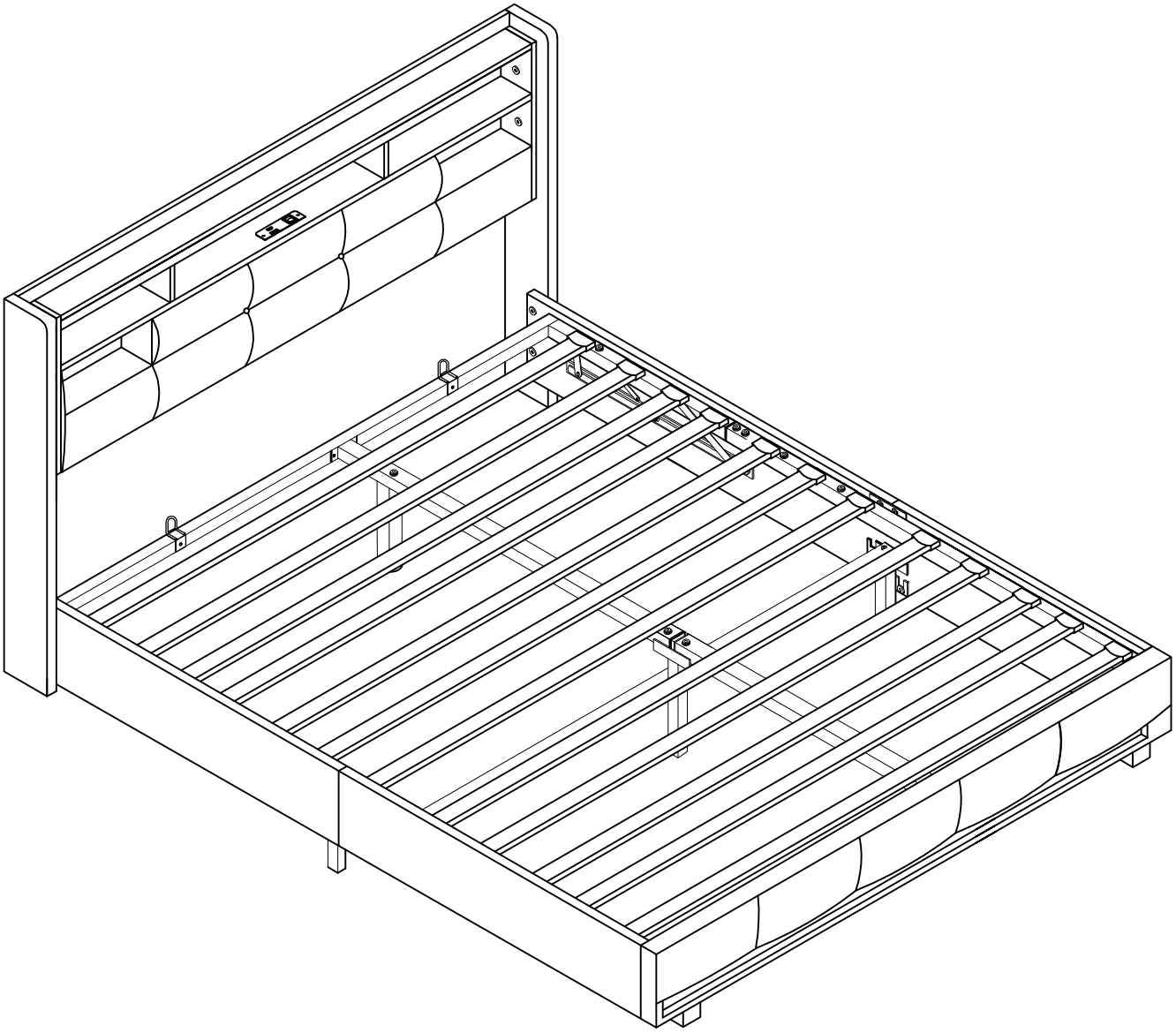

FULL/QUEEN

Stückliste(DE)/Liste des pièces(FR)/Part List(EN)

1: 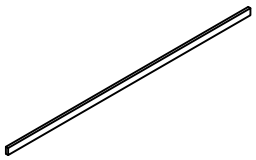 1PC	2: 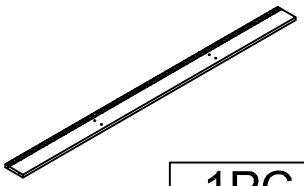 1PC	3: 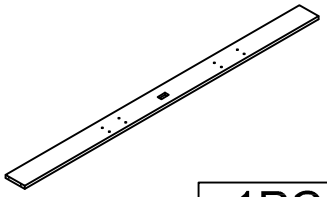 1PC	4: 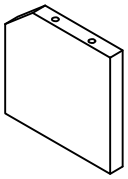 2PCS
5: 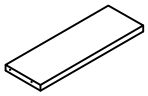 2PCS	6: L 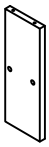 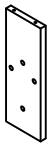 R 2PCS	7: 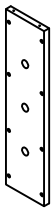 2PCS	8: 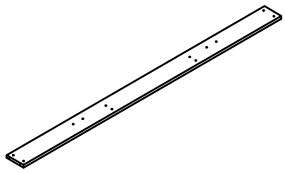 1PC
9: 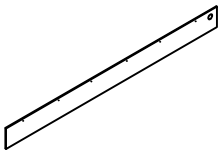 1PC	10: 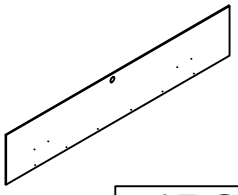 1PC	11: 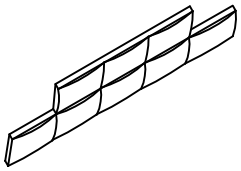 1PC	12: 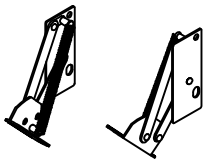 1SET	13:  1PC
14: 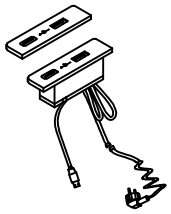			

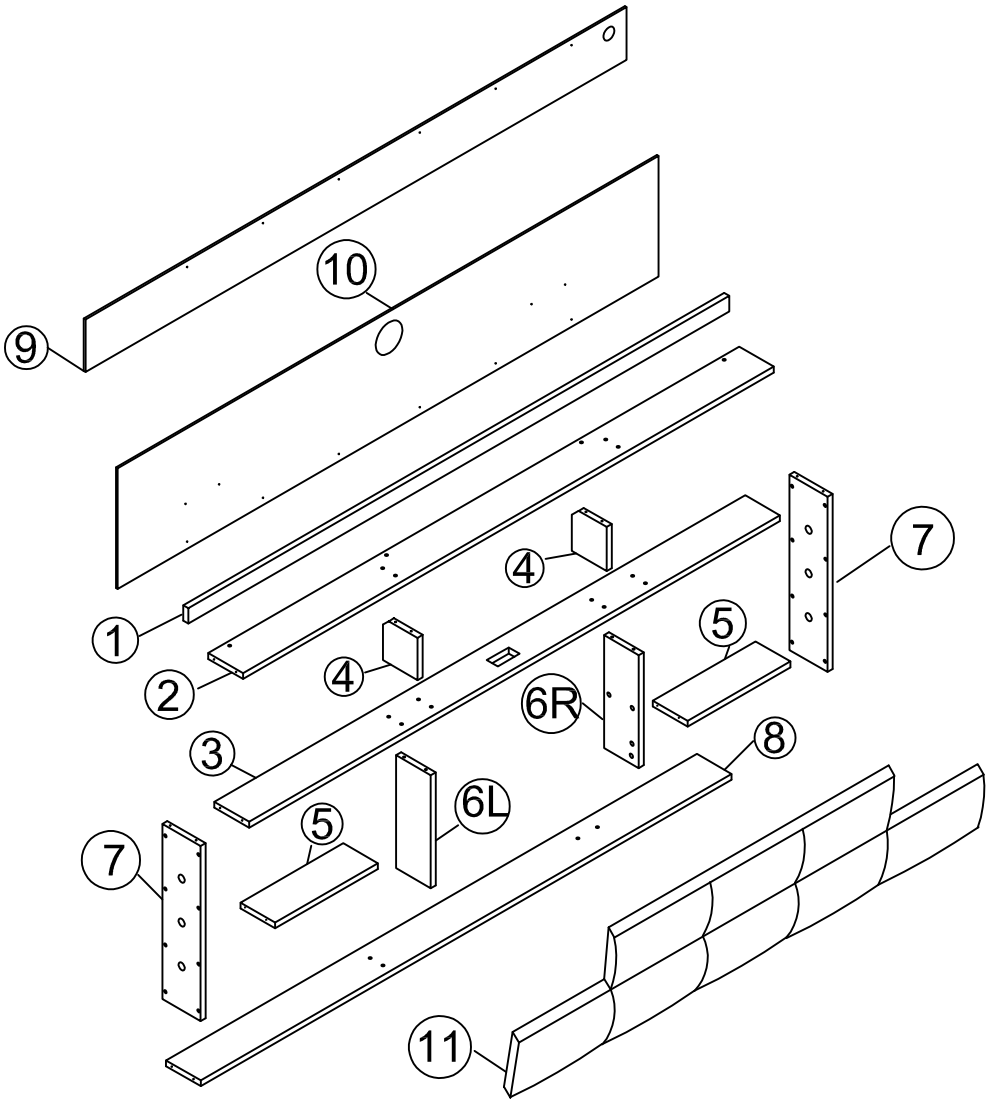

Stückliste(DE)/Liste des pièces(FR)/Part List(EN)

15:

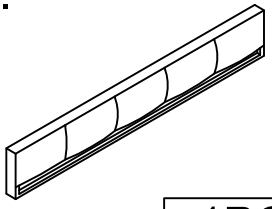

1PC

16:

L



R



2PCS

17:

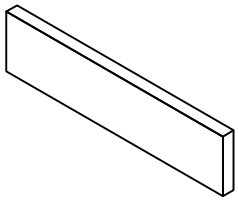

1PC

18:

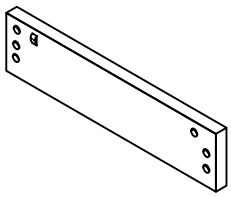

1PC

19:

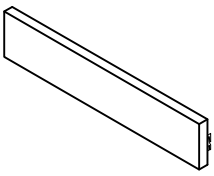

1PC

20:

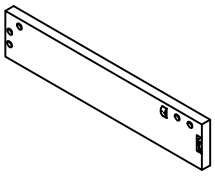

1PC

21:

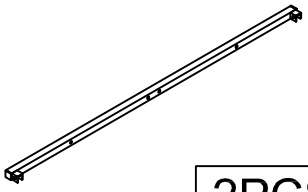

2PCS

22:

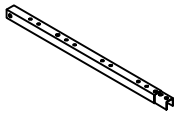

2PCS

23:

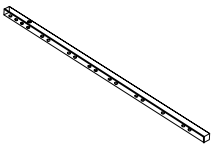

2PCS

24:

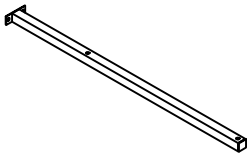

1PC

25:

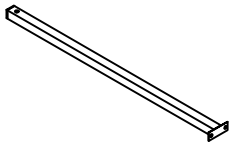

1PC

26:

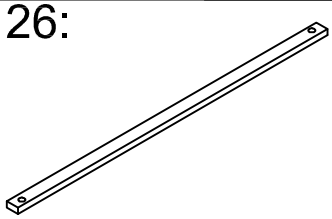

1PC

27:

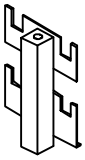

2PCS

28:

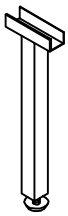

1PC

29:

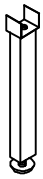

1PC

30:

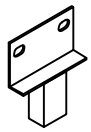

2PCS

31:



2PCS

32:

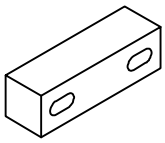

1PC

33:

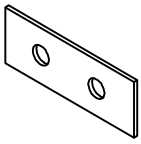

2PCS

34:

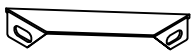

4PCS

35:

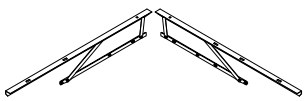

2PCS

36:



8+1PCS

37:

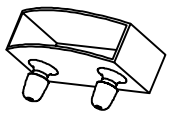

24PCS

38:

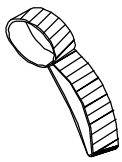

1PC

39:

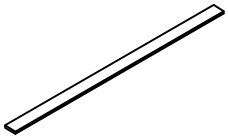

12PCS

40:



1PC

41:

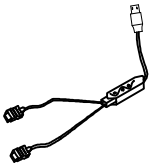

1PC

42:

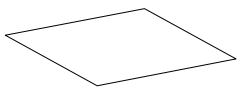

1PC

EISENWARE-LISTE(DE)/LISTE DE MATÉRIEL(FR)

A: 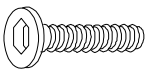 5/16"*35mm 12+1PCS	B:  5/16"*25mm 10+1PCS	C: 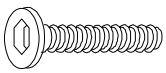 5/16"*50mm 2PCS	D: 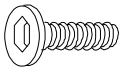 1/4"*35mm 8+1PCS
E:  1/4"*25mm 4PCS	F:  1/4"*15mm 32+2PCS	G:  1/4"*10mm 4PCS	H: 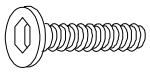 5/16"*40mm 19+2PCS
I: 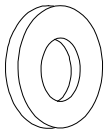 5/16"*19mm 43+2PCS	J:  1/4"*16mm 46+2PCS	K: 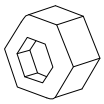 5/16" 16+2PCS	L: 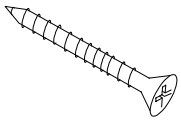 M4*35mm 62+2PCS
M: 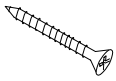 M3*15mm 2PCS	N: 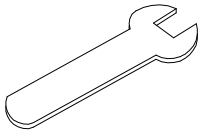 5/16" 1PC	O: 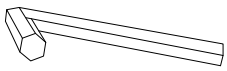 5/16"*100mm 1PC	P:  1/4"*65mm 1PC

STEP 1:

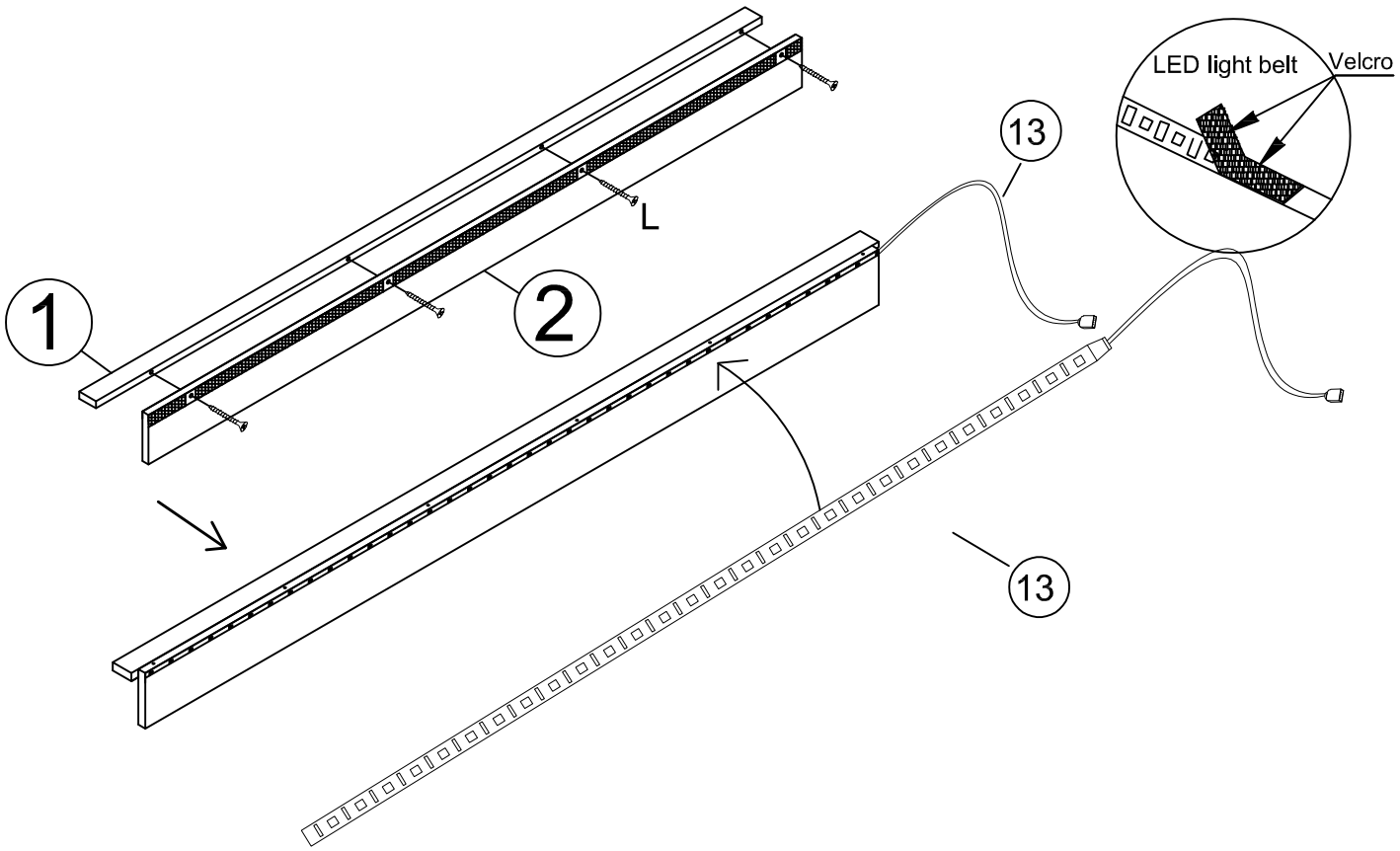

	L*4PCS
	13 *1PC

STEP 2:

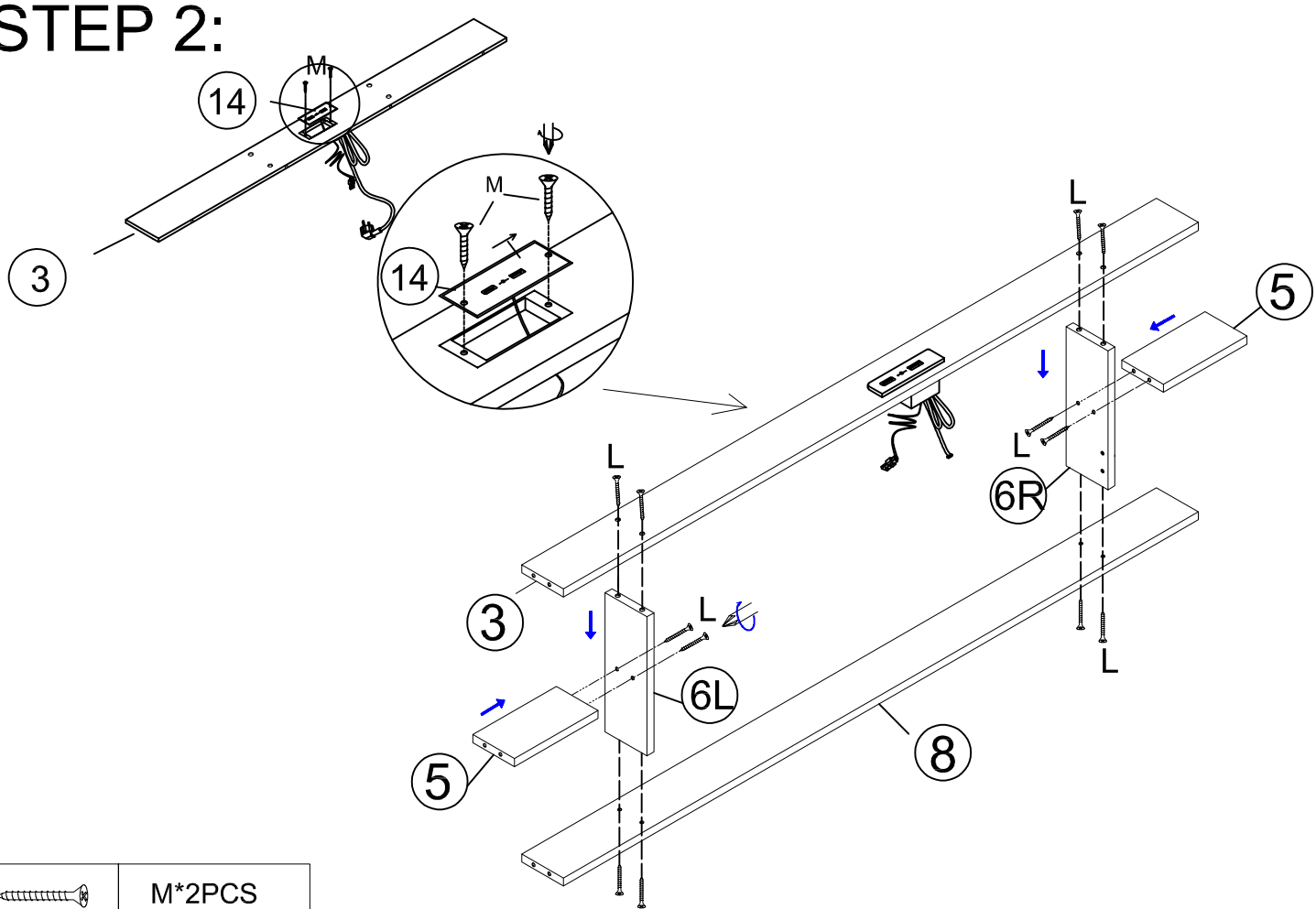

	M*2PCS
	L*12PCS

STEP 3:

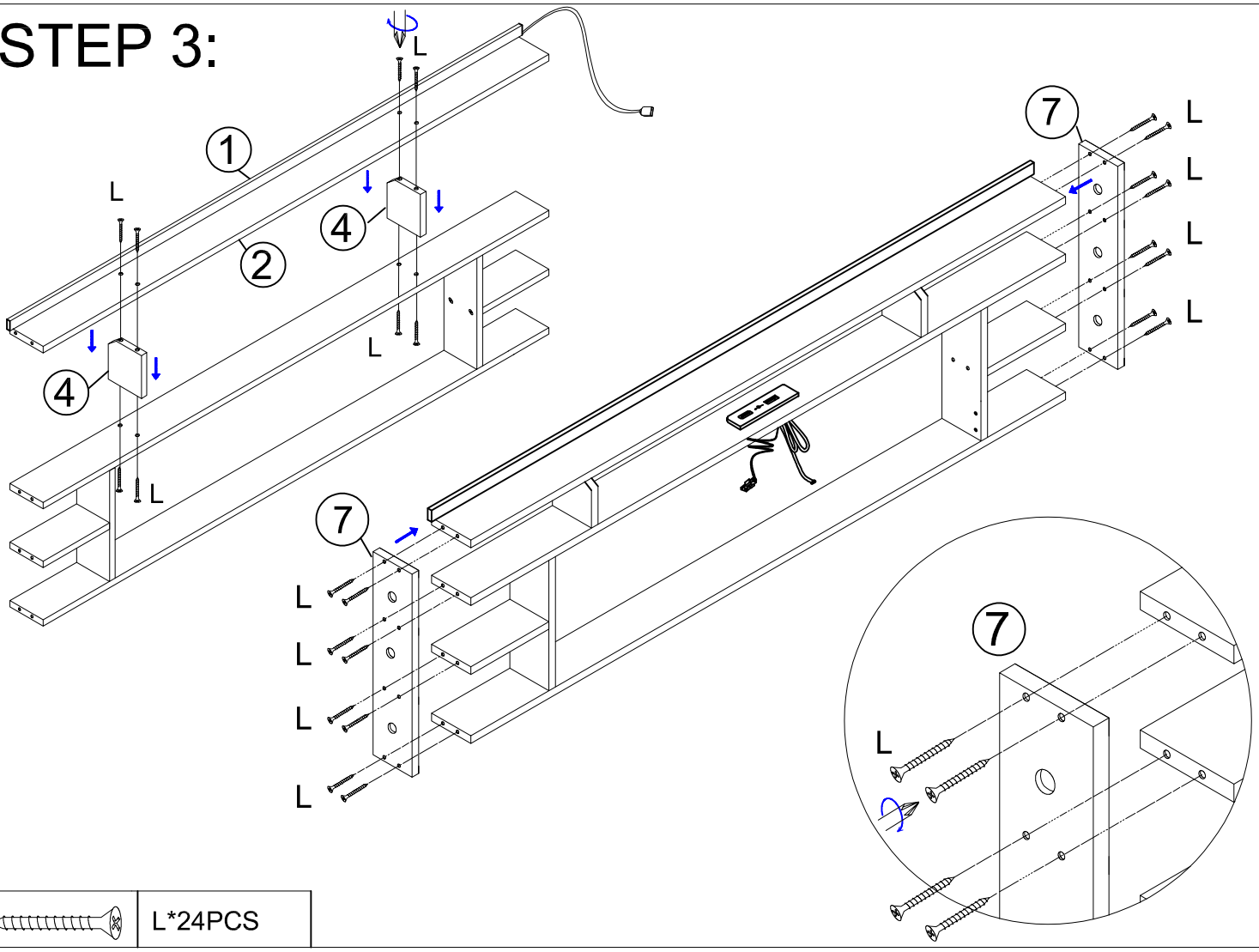

	L*24PCS

STEP 4:

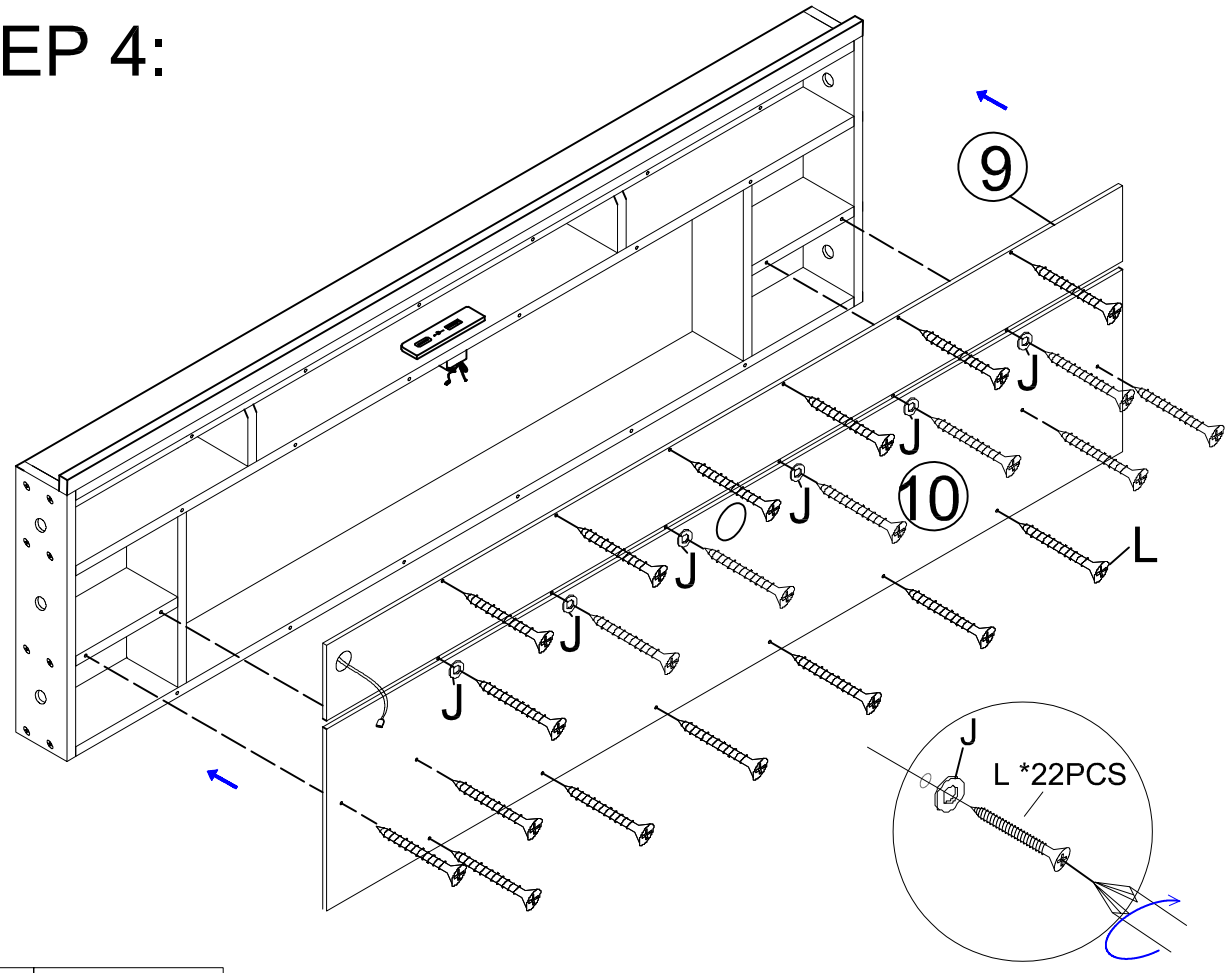

	J X 6PCS
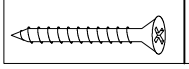	L*22PCS

STEP 5:

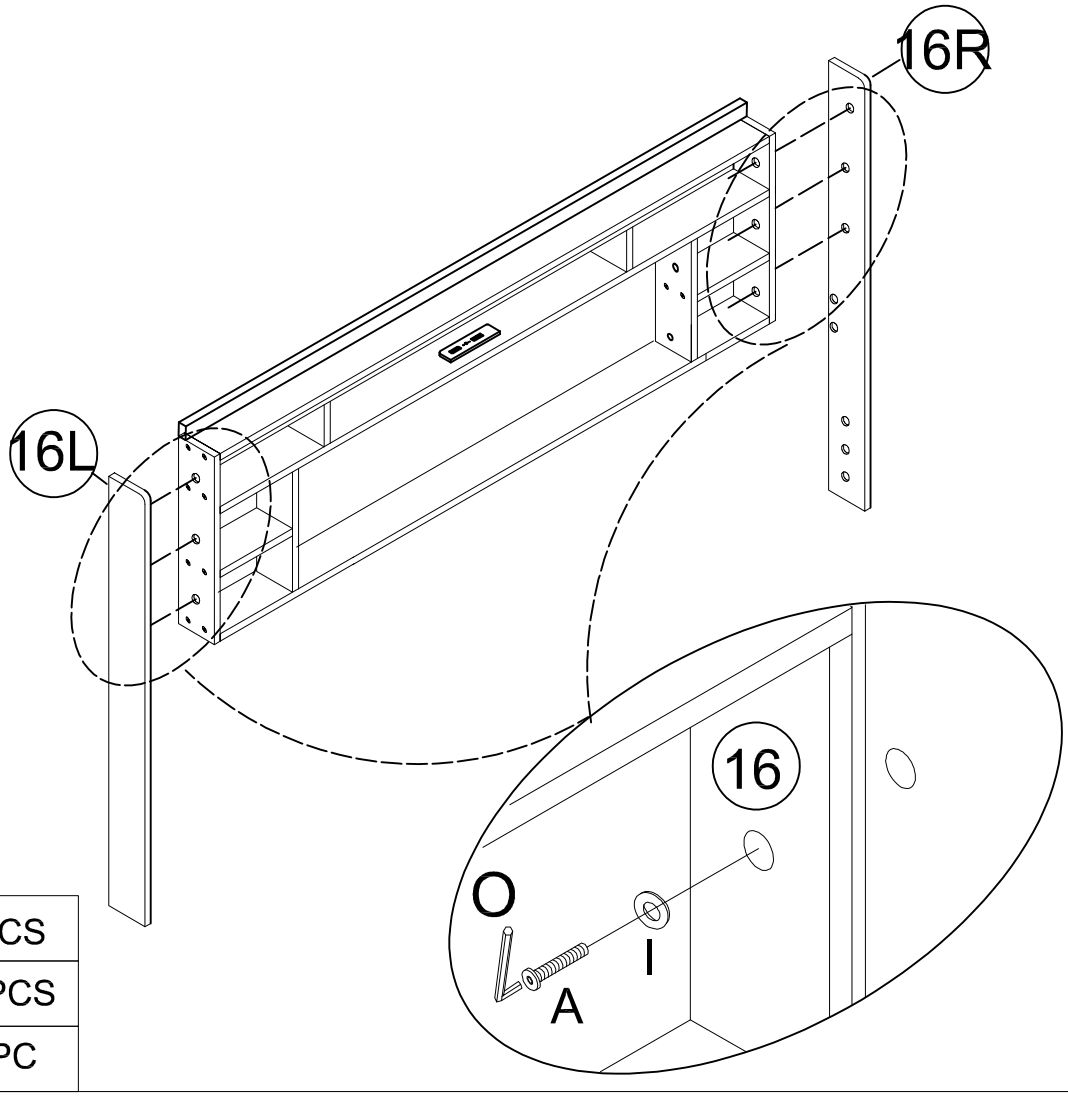

	A X 6PCS
	I X 6PCS
	O X1PC

STEP 6:

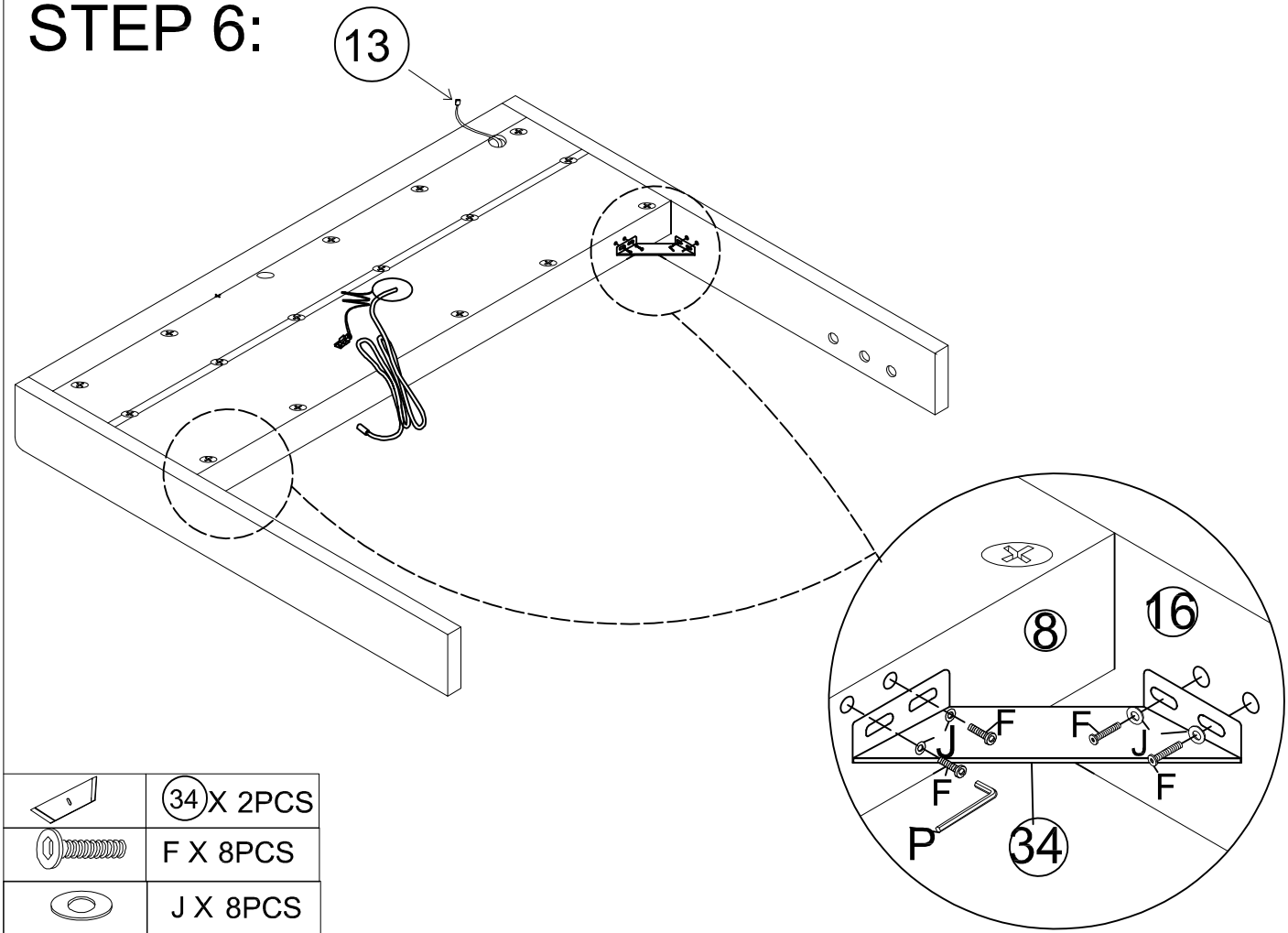

	(34) X 2PCS
	F X 8PCS
	J X 8PCS
	P X1PC

STEP 7:

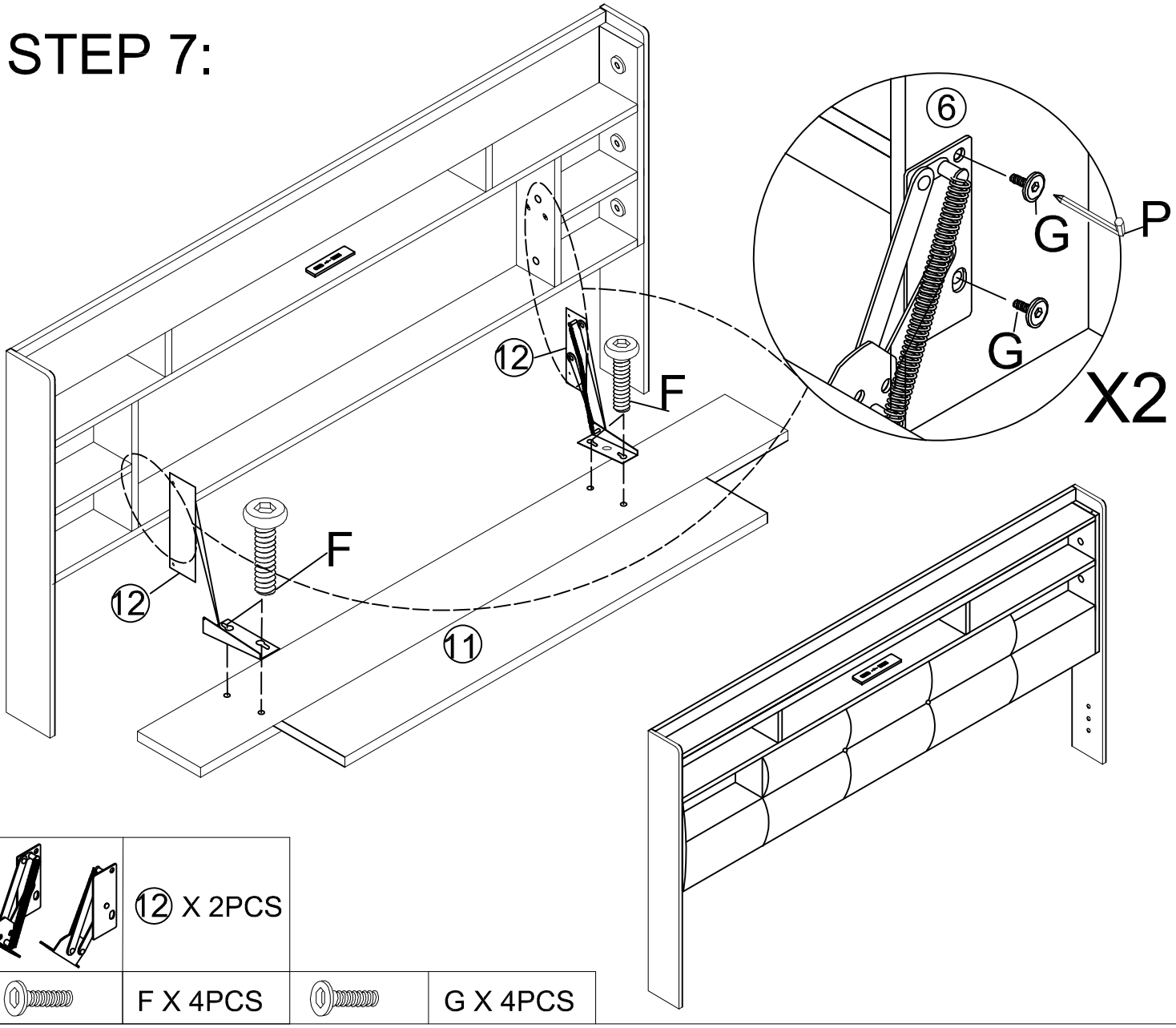

	⑫ X 2PCS		
	F X 4PCS		G X 4PCS

STEP 8:

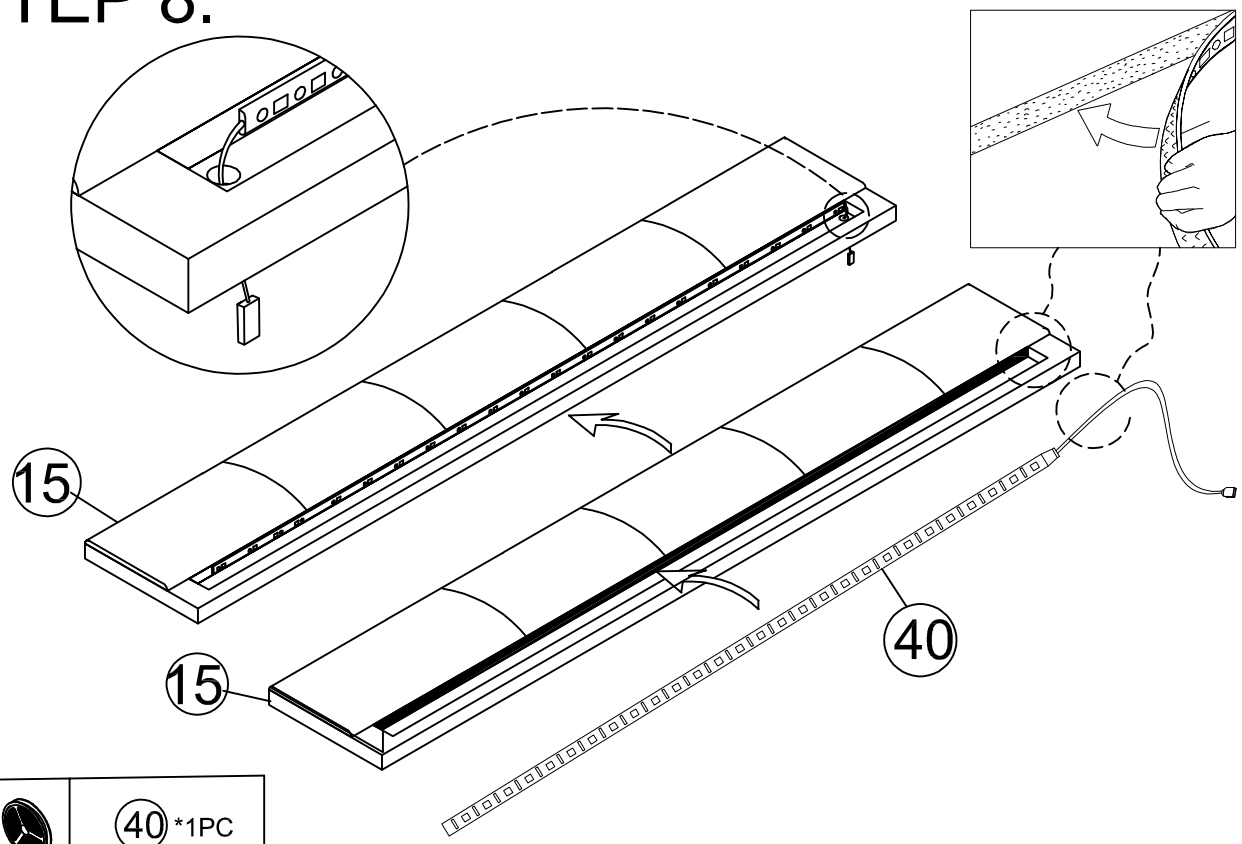

	㊵*1PC

STEP 9:

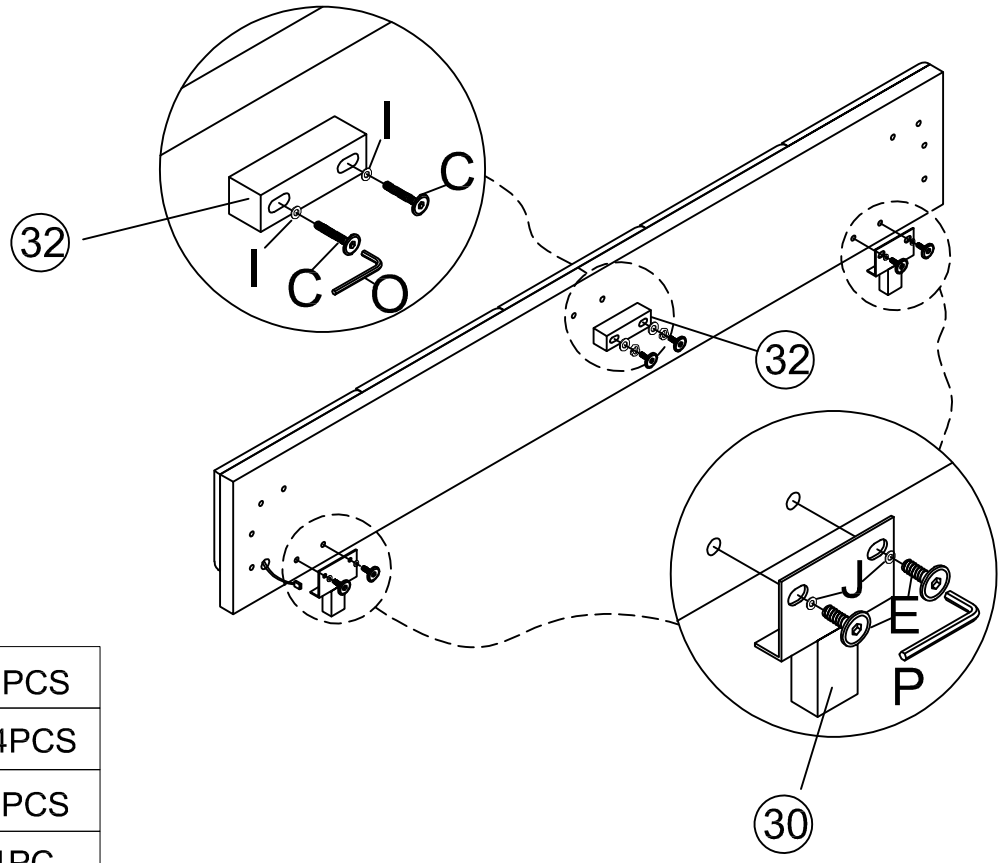

	C X 2PCS		
	E X 4PCS		
	I X 2PCS		
	O X1PC		
	P X1PC		J X 4PCS

STEP 10:

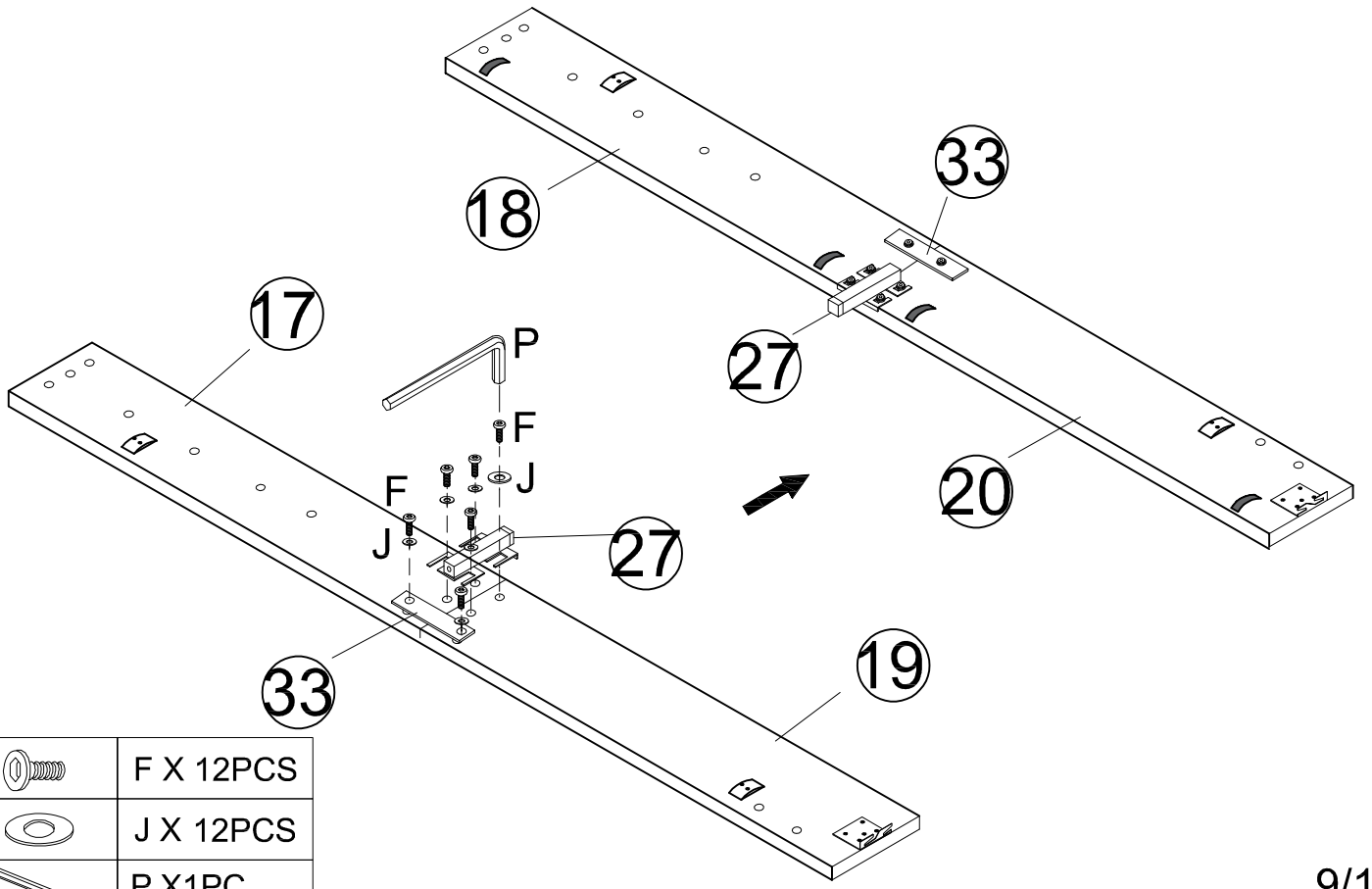

	F X 12PCS
	J X 12PCS
	P X1PC

STEP 11:

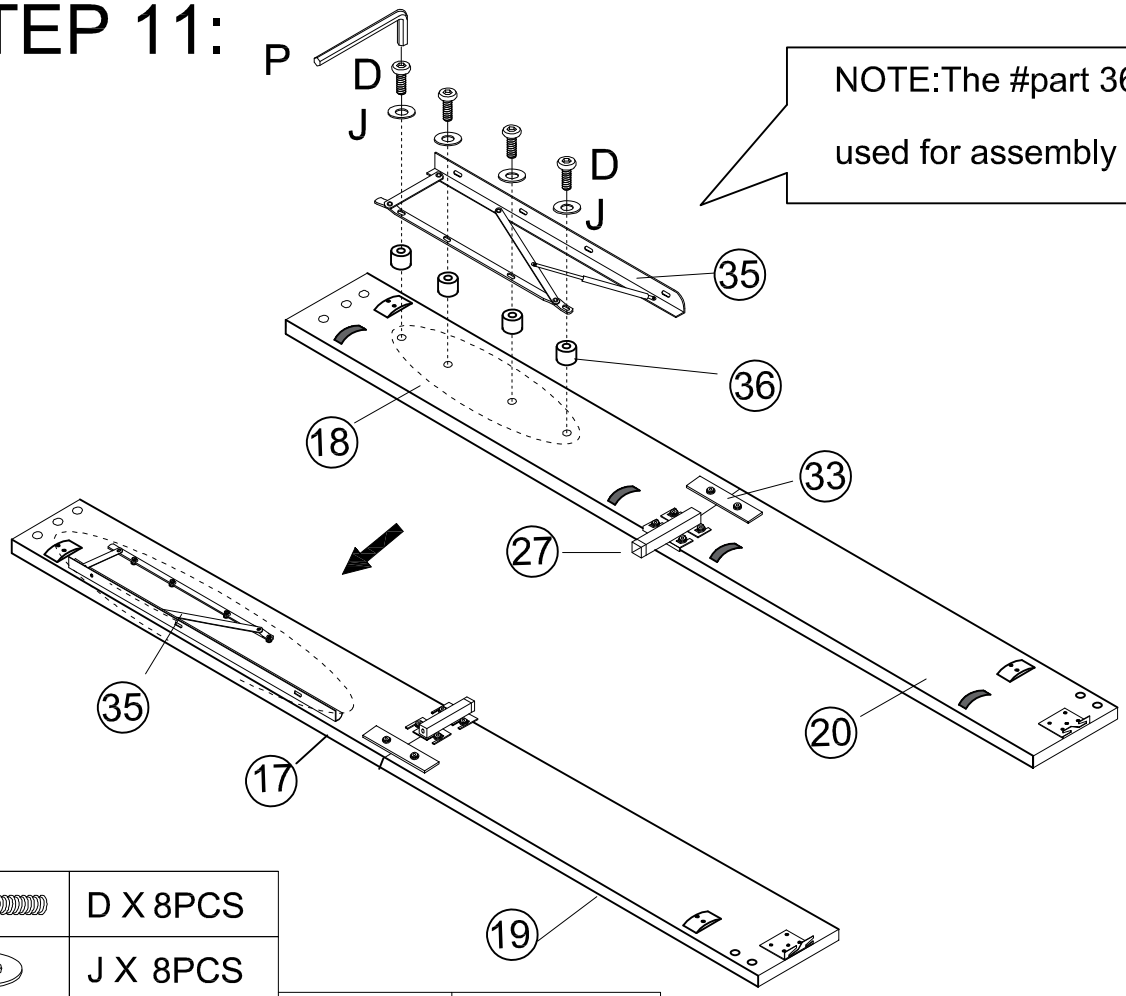

NOTE:The #part 36 must be used for assembly in this step!

	D X 8PCS		
	J X 8PCS		
	P X1PC		36 X 8PCS

STEP 12:

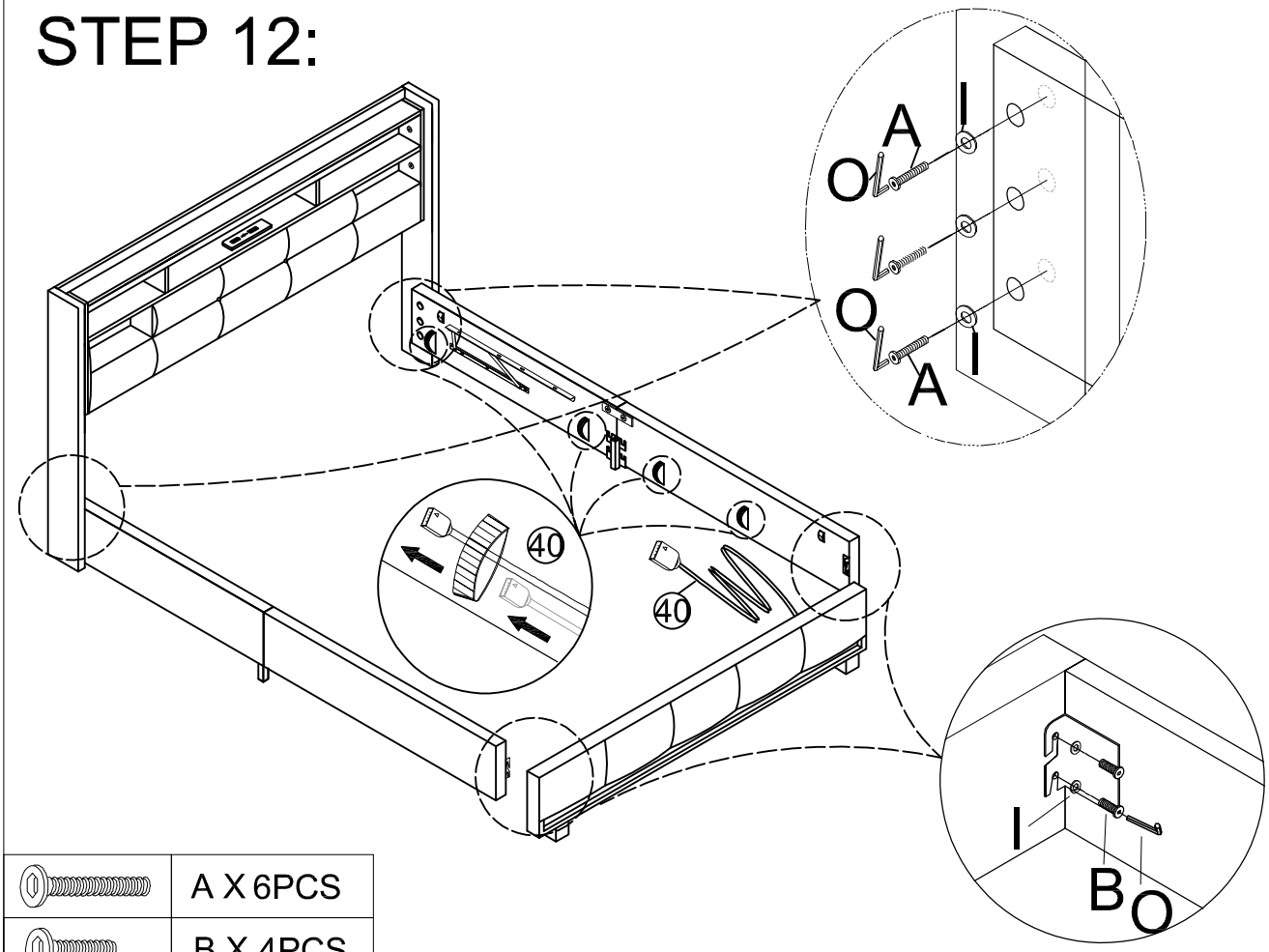

	A X 6PCS		
	B X 4PCS		
	I X10PCS		O X1PC

STEP 13:

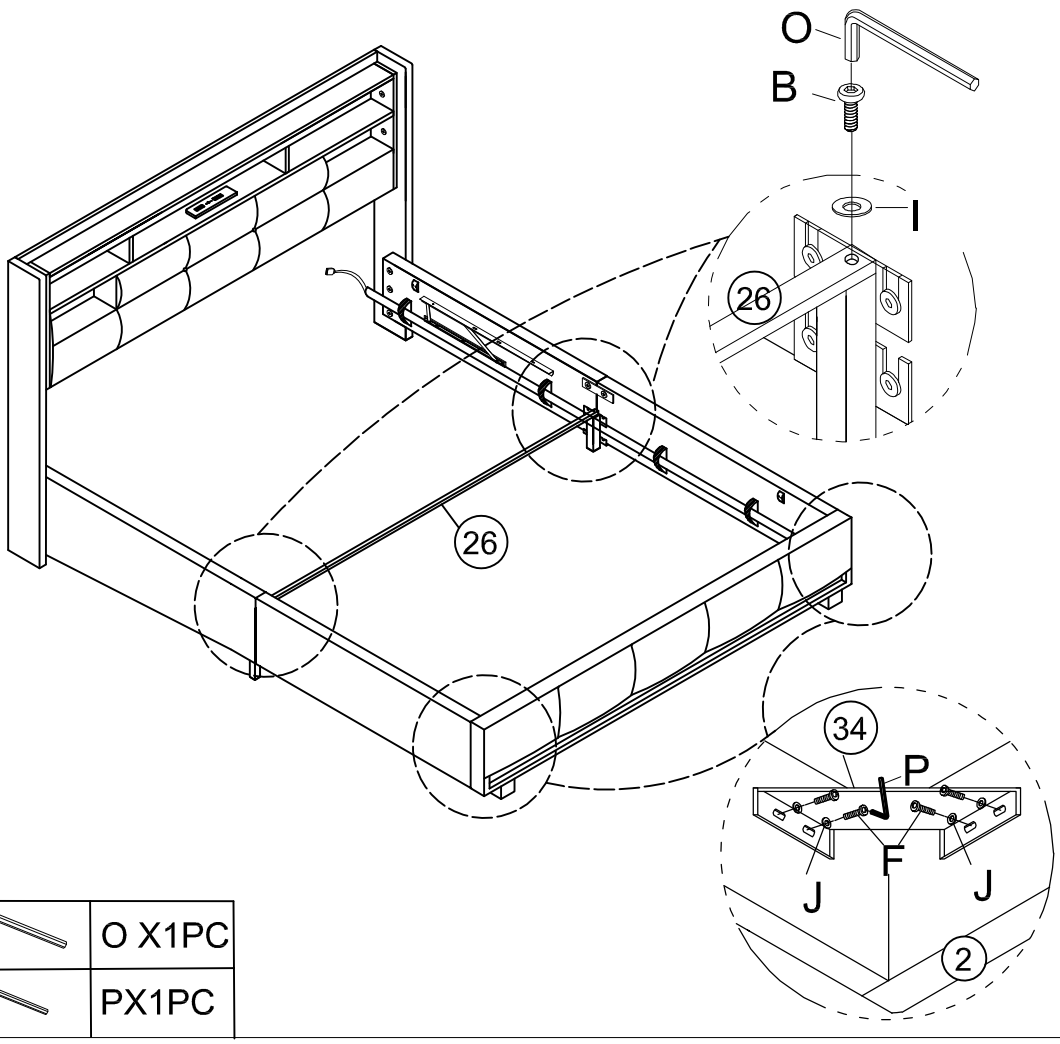

	34 X 2PCS
	B X 2PCS
	F X 8PCS
	I X 2PCS
	J X 8PCS

	O X1PC
	PX1PC

STEP 14:

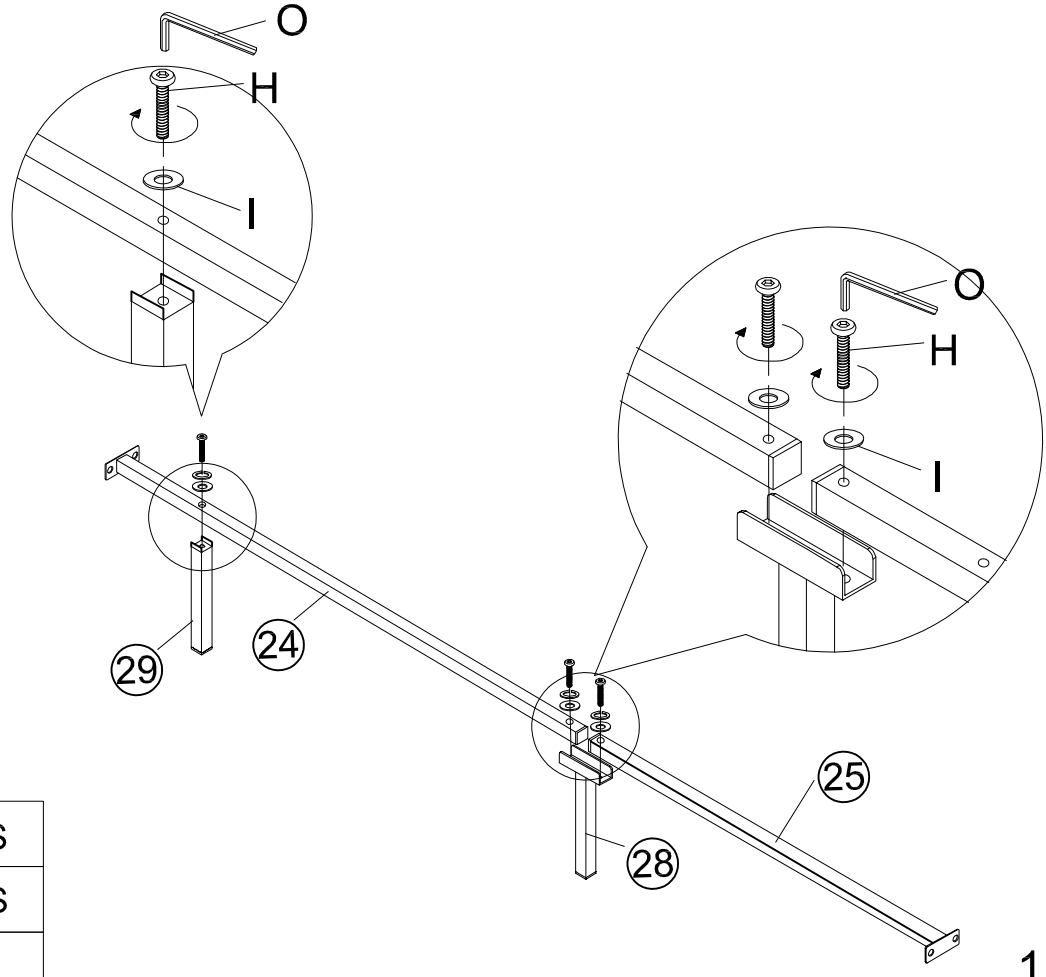

	H X 3PCS
	I X 3PCS
	O X1PC

STEP 15:

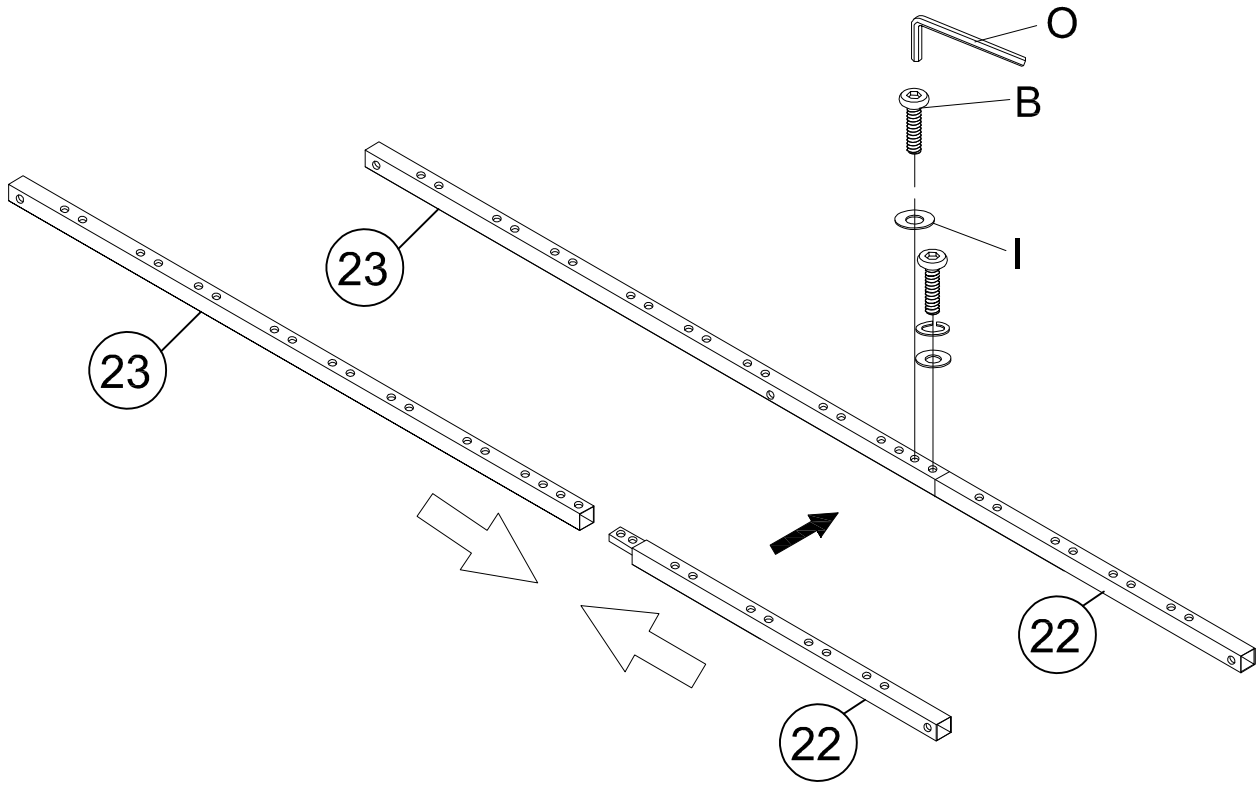

	B X 4PCS
	I X 4PCS
	O X1PC

X 2

STEP 16:

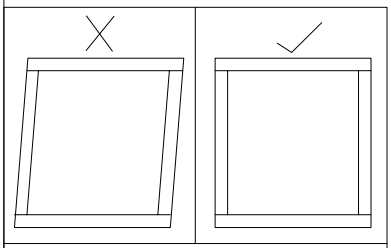

(DE)
Hinweis:Stelle Sie sicher,dass die Rahmenbaugruppen rechtwinklig sind.

(FR)
Remarque:Assurez-vous que l'assemblage du cadre est carré.

(EN)
Note: Make sure that the frame sub - assemblies are at right angle.

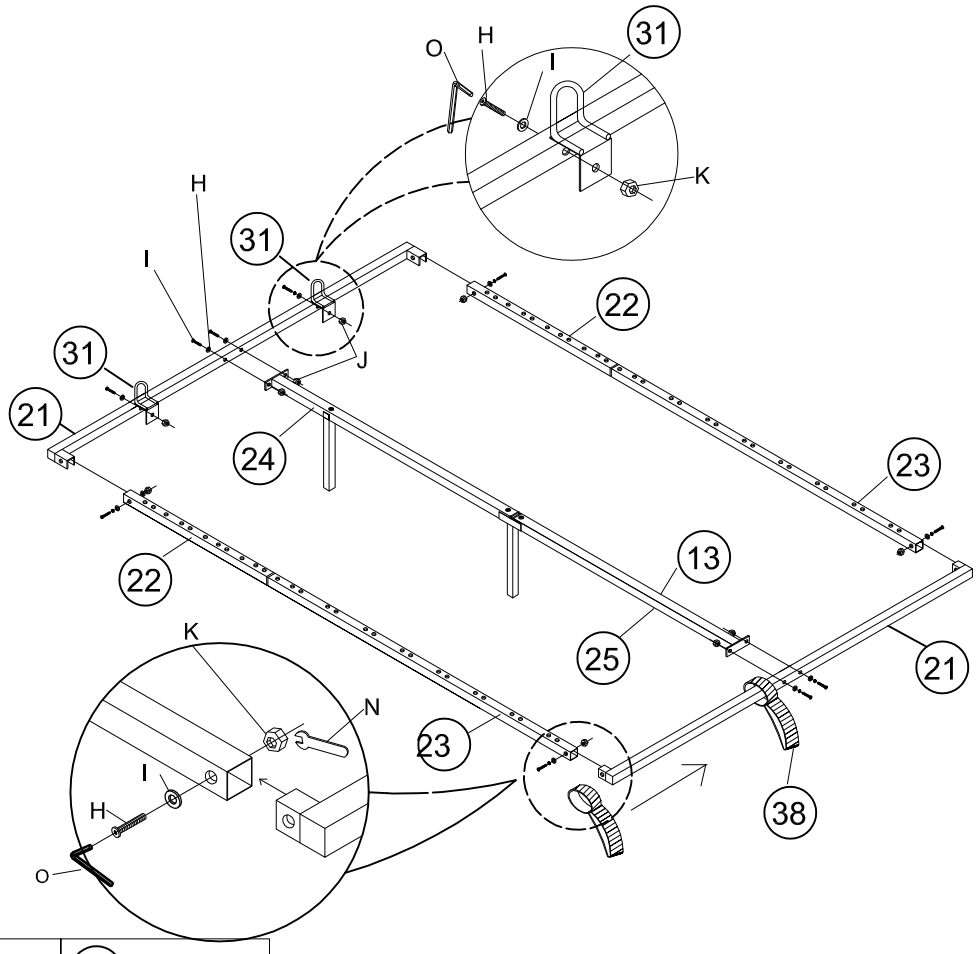

	H X 10PCS		
	I X 10PCS		
	K X 10PCS		
	O X1PC		31 X2PCS
	N X1PC		38 X1PC

STEP 17:

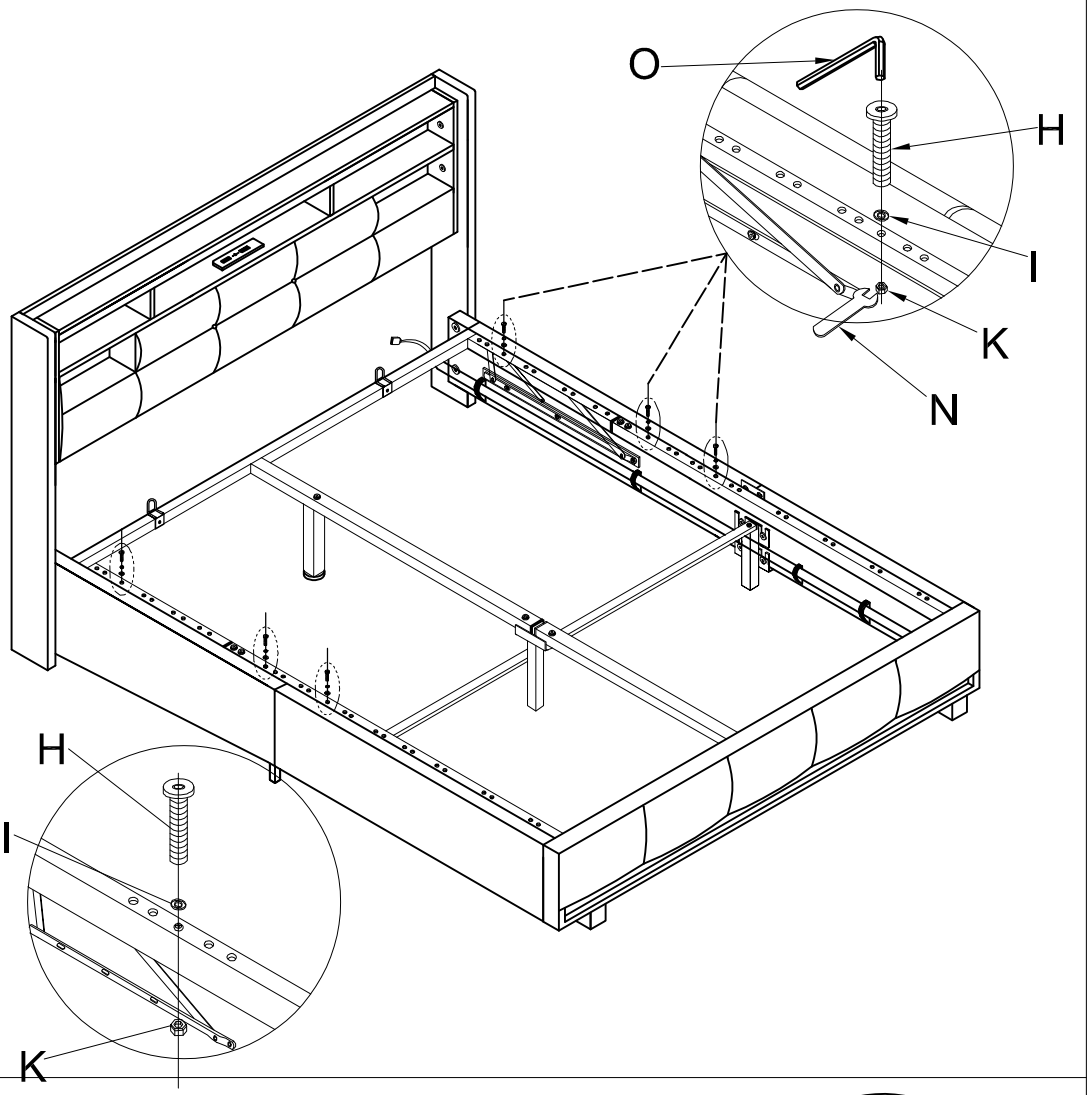

	H X 6PCS
	I X 6PCS
	KX 6PCS
	O X1PC
	N X1PC

STEP 18:

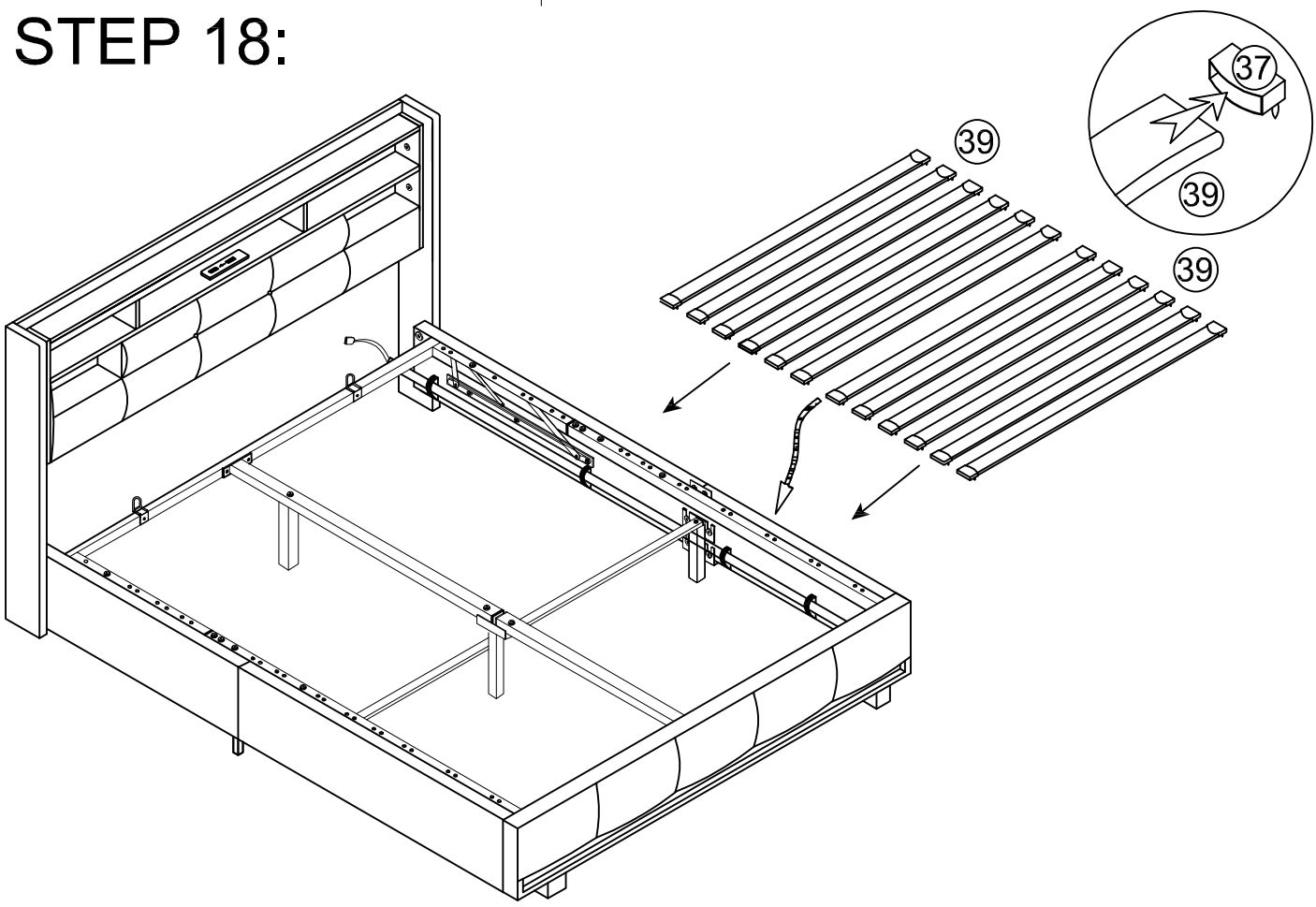

	(37) X24PCS

STEP 19:

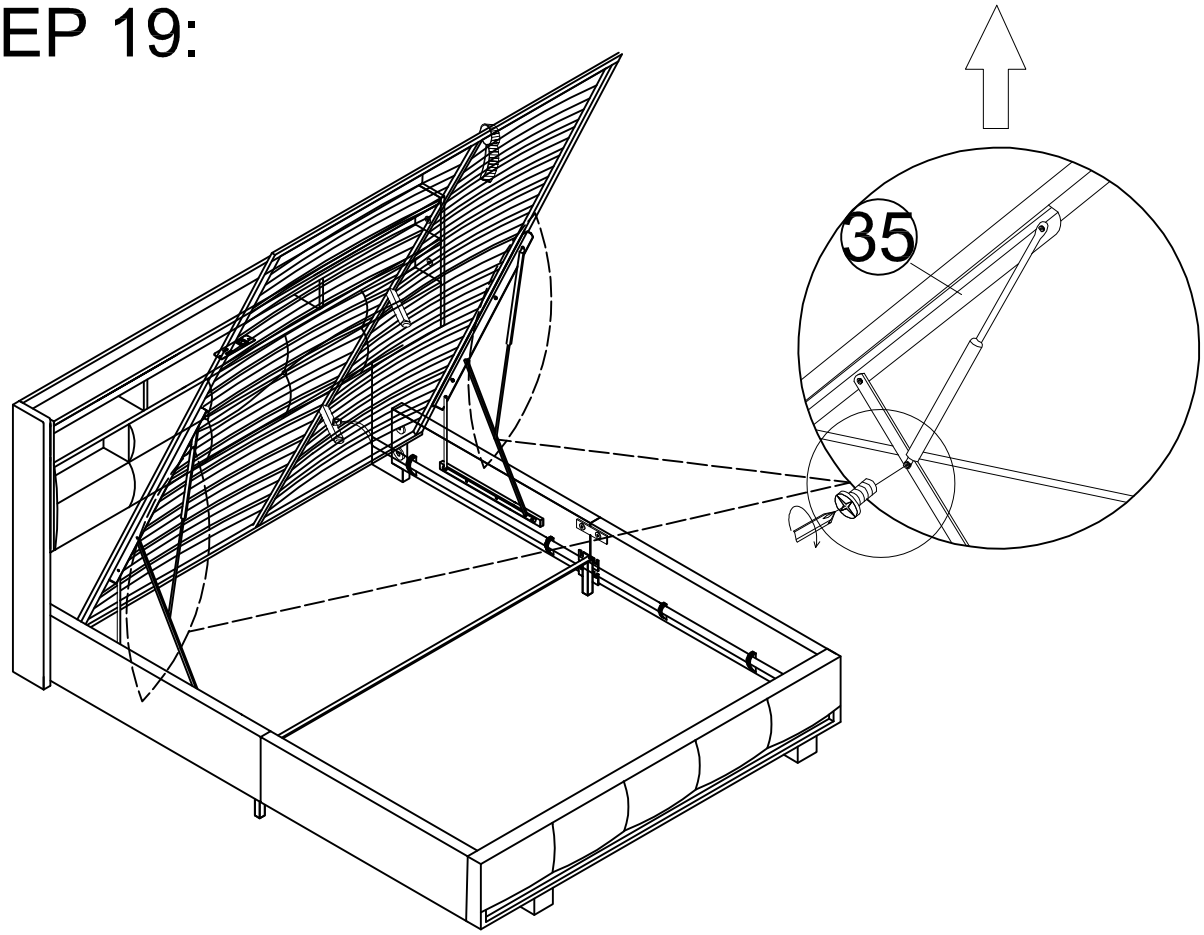

STEP 20:

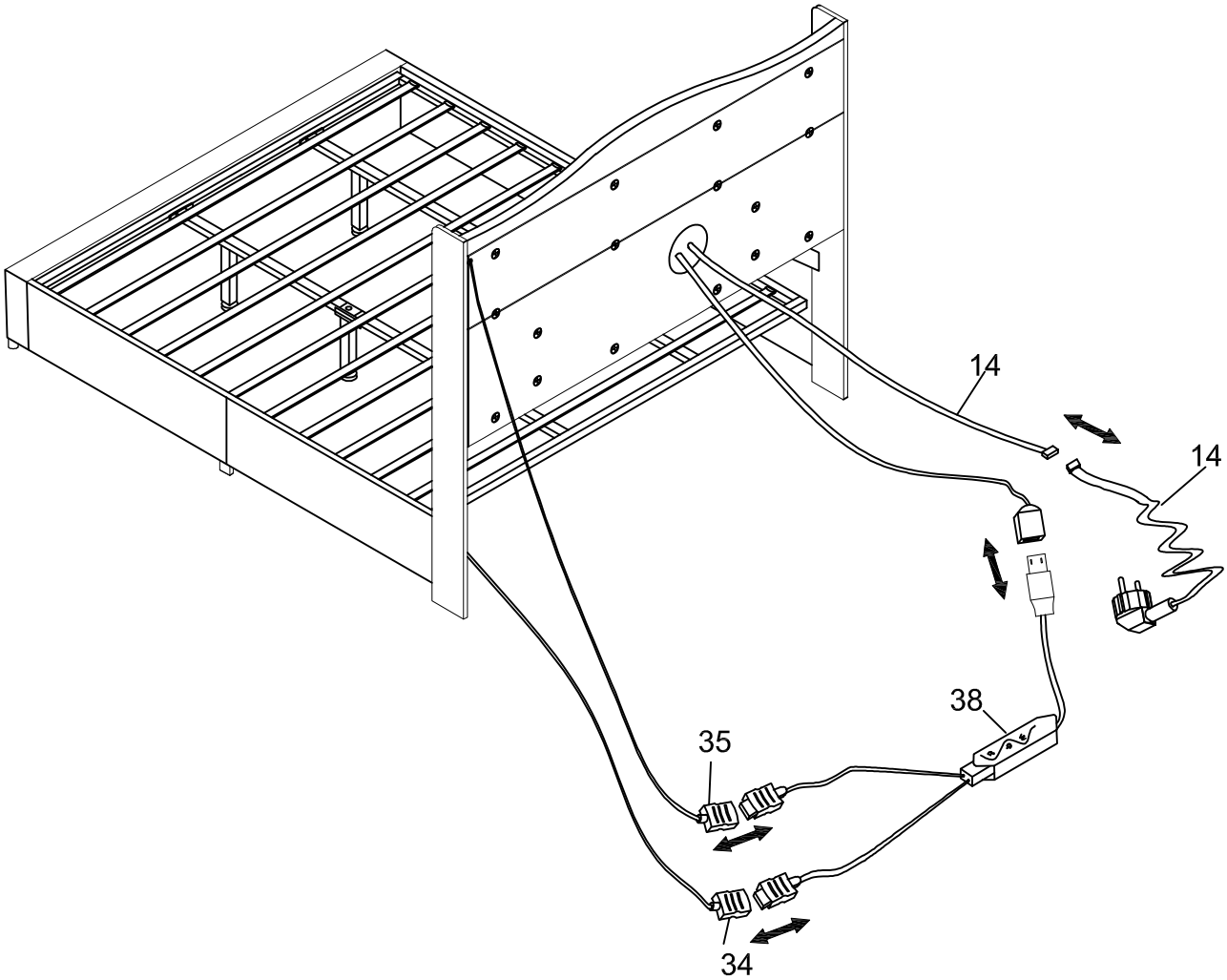

STEP 21:

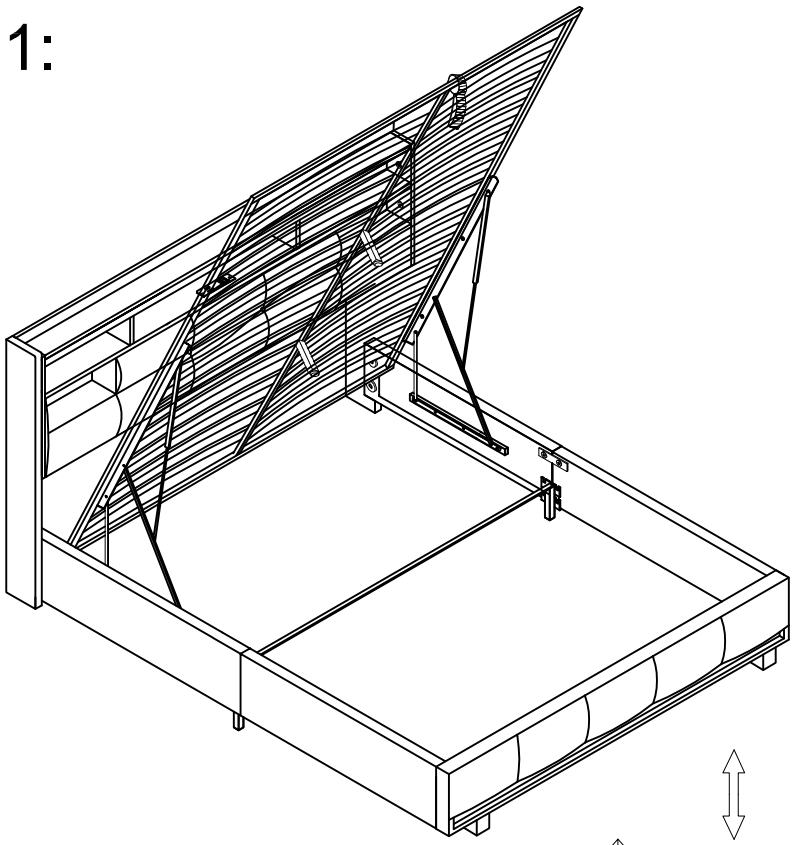

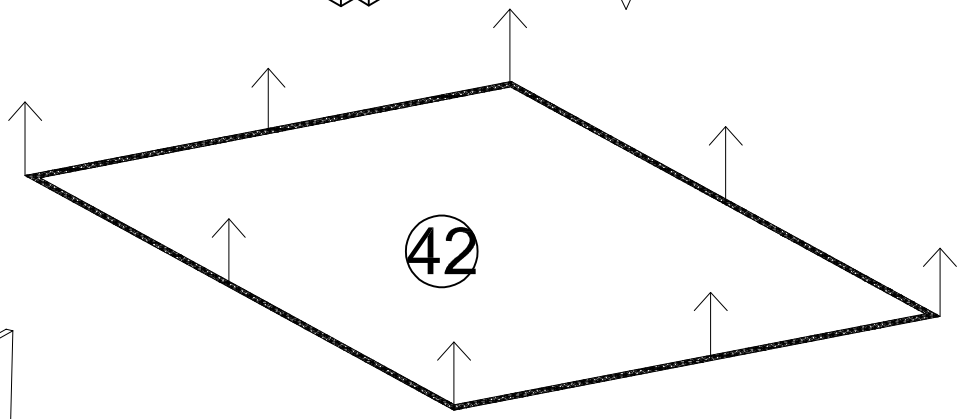

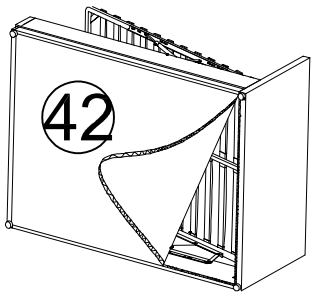

When lowering the bed frame, spread your hands apart and press down vertically.



