ASSEMBLY INSTRUCTIONS

SPU : A003
Loveseat Sofa

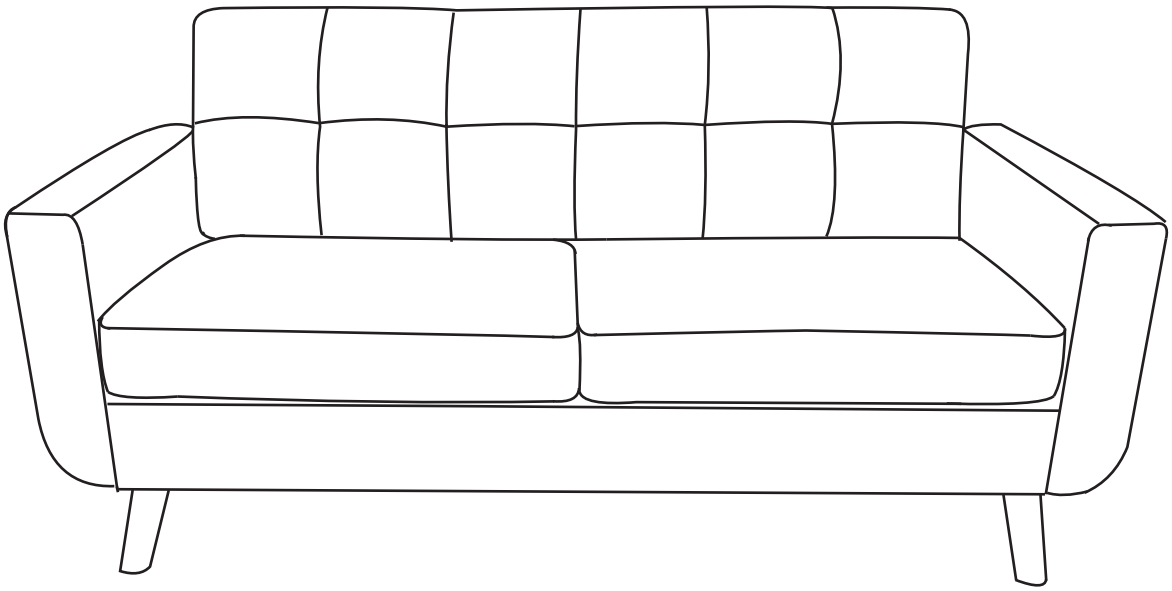

TIME | 2 OF PEOPLE | DIFFICULTY

NOTICE

Instruction Booklet - Important Safety Information

Thank you for choosing our product. Please review this booklet carefully for essential safety information and keep it for future reference.

● Upon receiving the product, ***ensure all parts are present and intact*** before proceeding with installation. Follow the entire installation instructions provided.

● During installation, exercise caution and refrain from immediately tightening screws. Secure all screws to 80% before final tightening.

● Note: Cushions are ***compressed*** and cannot be recompressed once opened. Returns are accepted only for items in their ***original, unopened condition.***

For assistance, contact our support team at xlmcustomerservice@gmail.com if you encounter the following issues:

A. The outer box is damaged.

B. The product is damaged/bent/cracked while you open the box.

C. The parts/accessories/assembly tools are missing.

D. The instructions are not clear and cannot be referred to.

E. The product has functional problems.

F. Other aspects that you are not satisfied with.

Your satisfaction is our priority, and we're here to assist you every step of the way.

Before installation, please check that the parts are all included !

Carton A

Materials

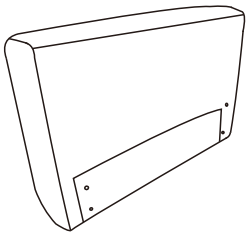

Left Armrest

A-L*1

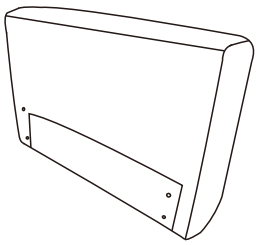

Right Armrest

A-R*1

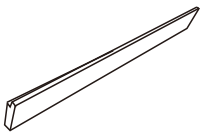

Front board

B*1

Front Metal

C*2

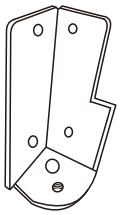

Left Rear Metal

D-L*1

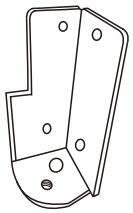

Right Rear Metal

D-R*1

M6x20mm

Screws

E*18

Allen Key

F*1

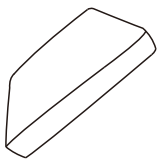

Seat Cushion

G*2

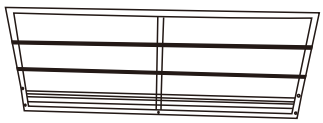

Iron frame backrest

H*1

Legs

I*4

M8x40mm

Screws

J*4

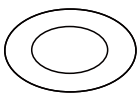

Washers

K*4

Connector

L*1

Wooden slats

M*2

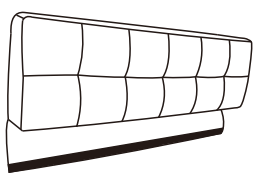

Backrest

N*1

Installation Steps

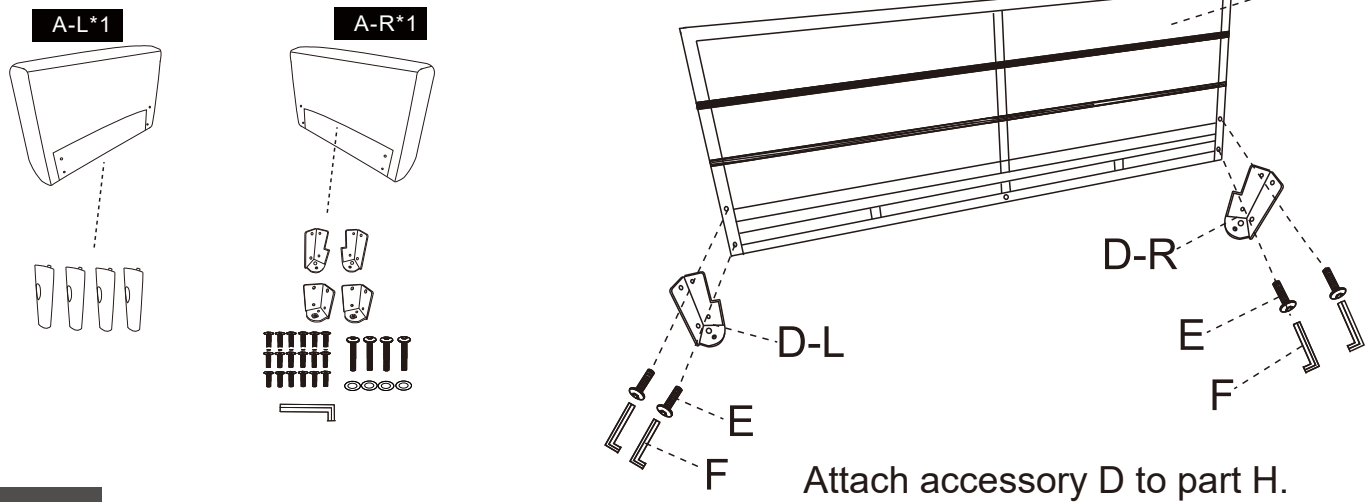

STEP 1

Attach accessory D to part H.

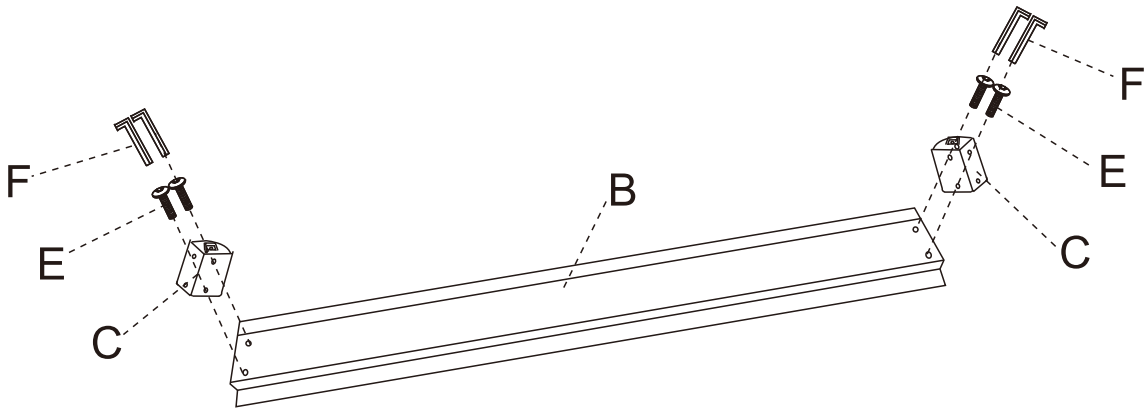

STEP 2

Attach accessory C to part B.

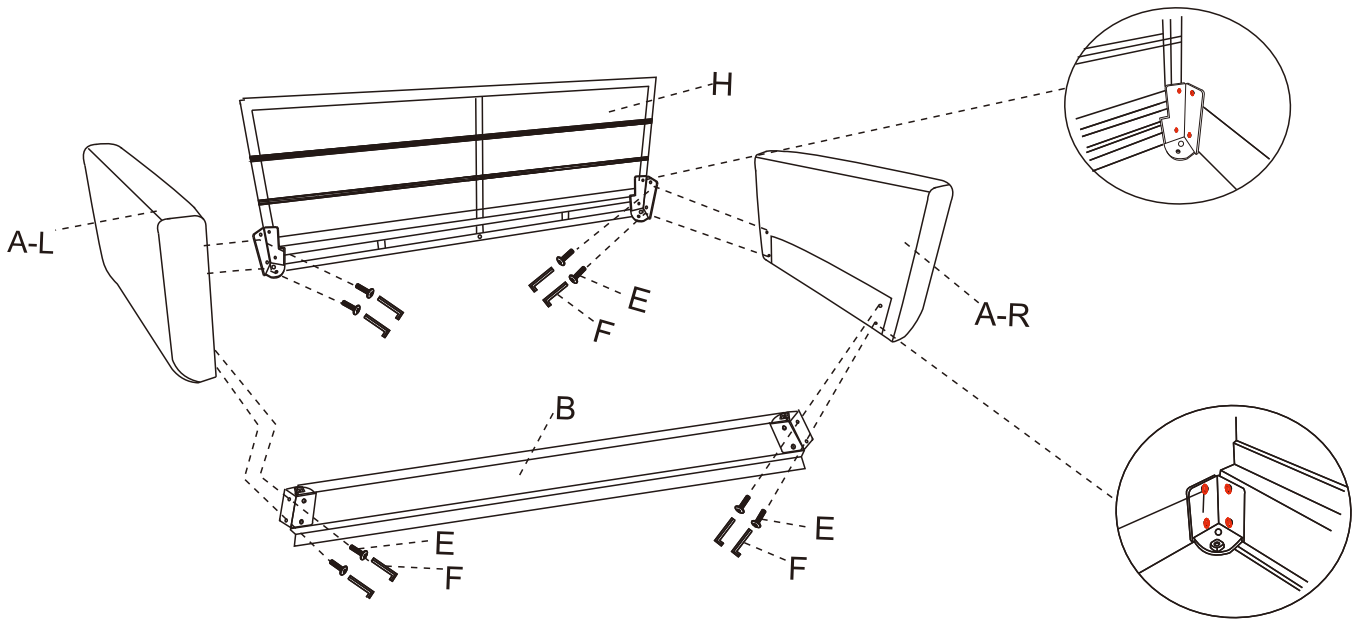

STEP 3

Secure the left and right armrests to parts H and B, respectively.

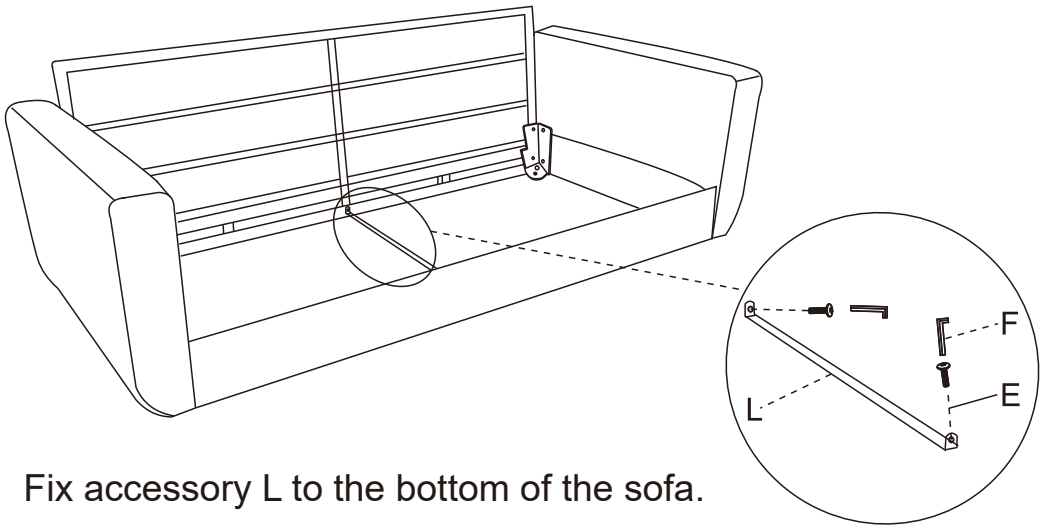

STEP 4

Fix accessory L to the bottom of the sofa.

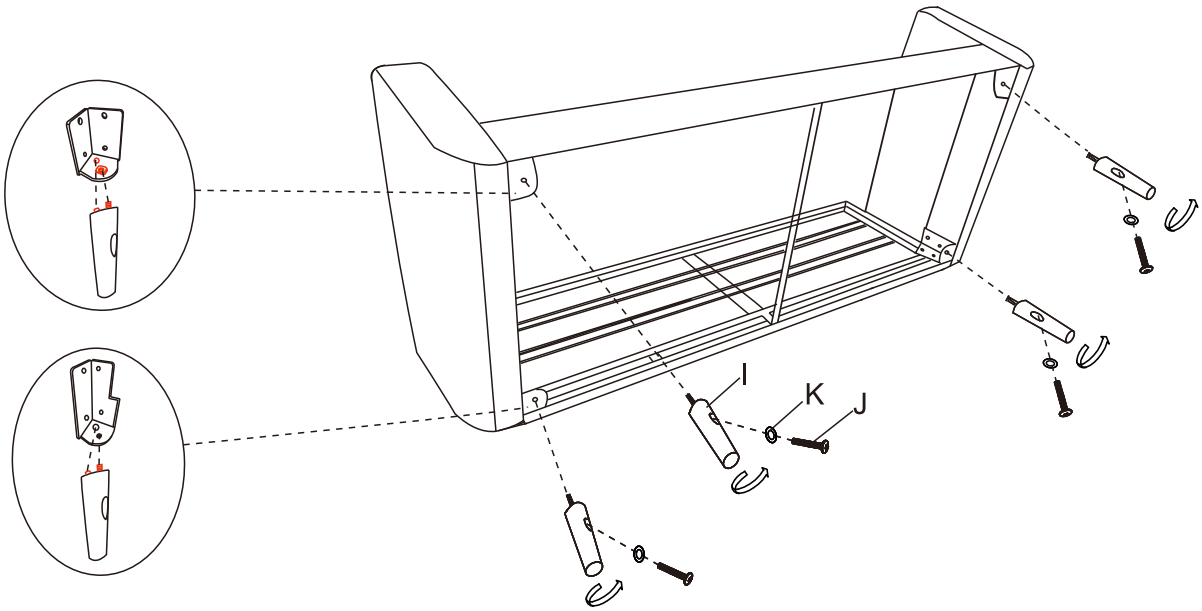

STEP 5

Install the sofa legs (part I),Please align the support legs with the wooden pin holes and the threaded holes before tightening the screws.

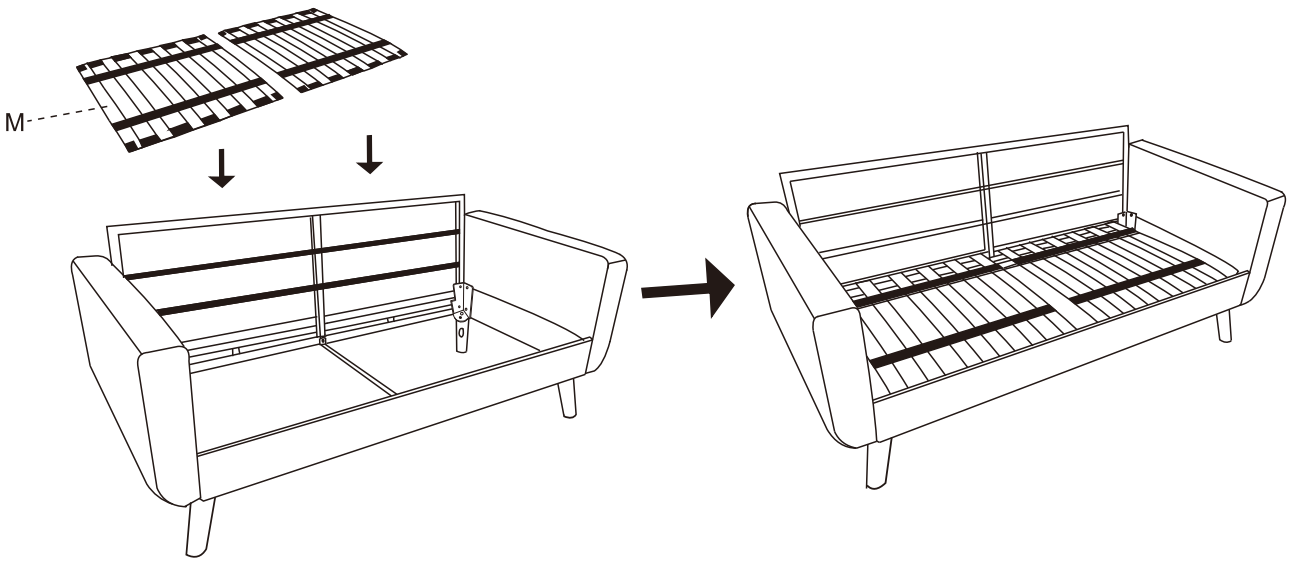

STEP 6

Place component M on the bottom frame of the sofa.

Tips：As the cushions are all vacuum compressed for better shipment, there will be some wrinkles. Please give your cushions up to 72 hours to reach their original size and the wrinkles will basically disapear.

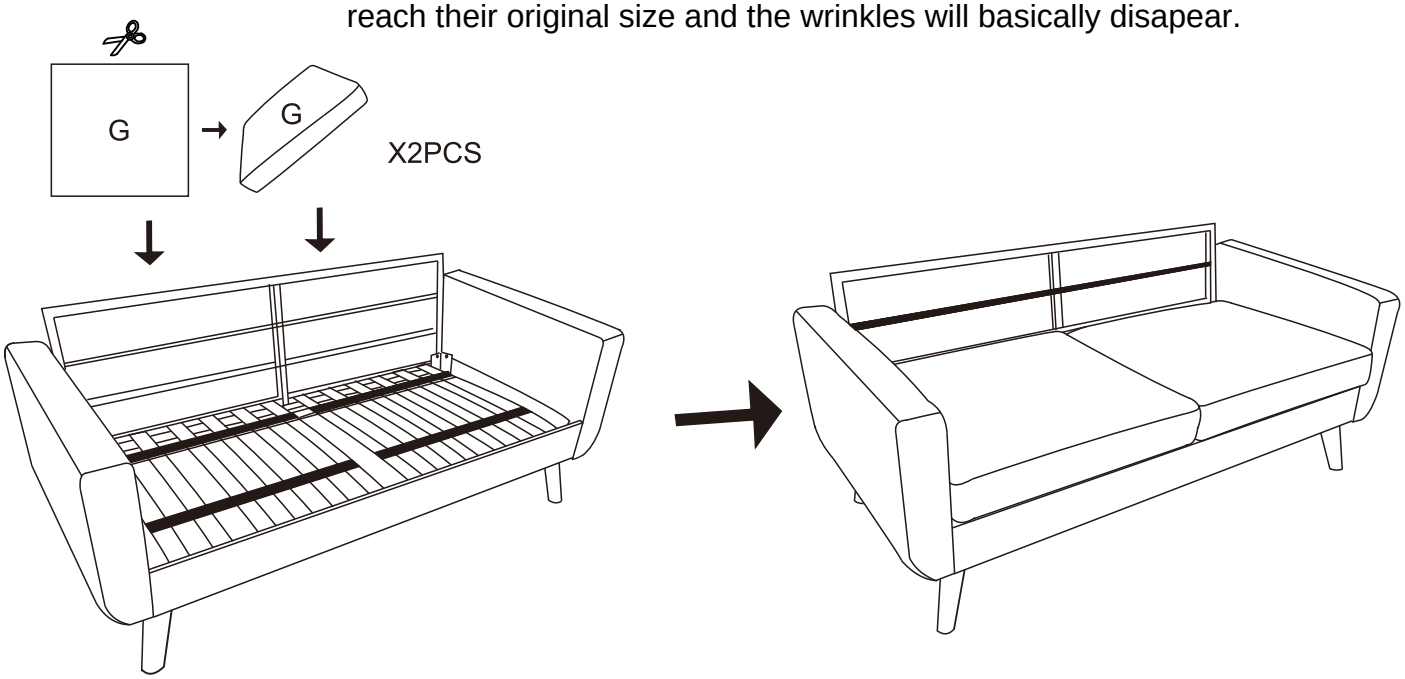

Unpack the cushions from the compressed bags and place them on the sofa.

STEP 7

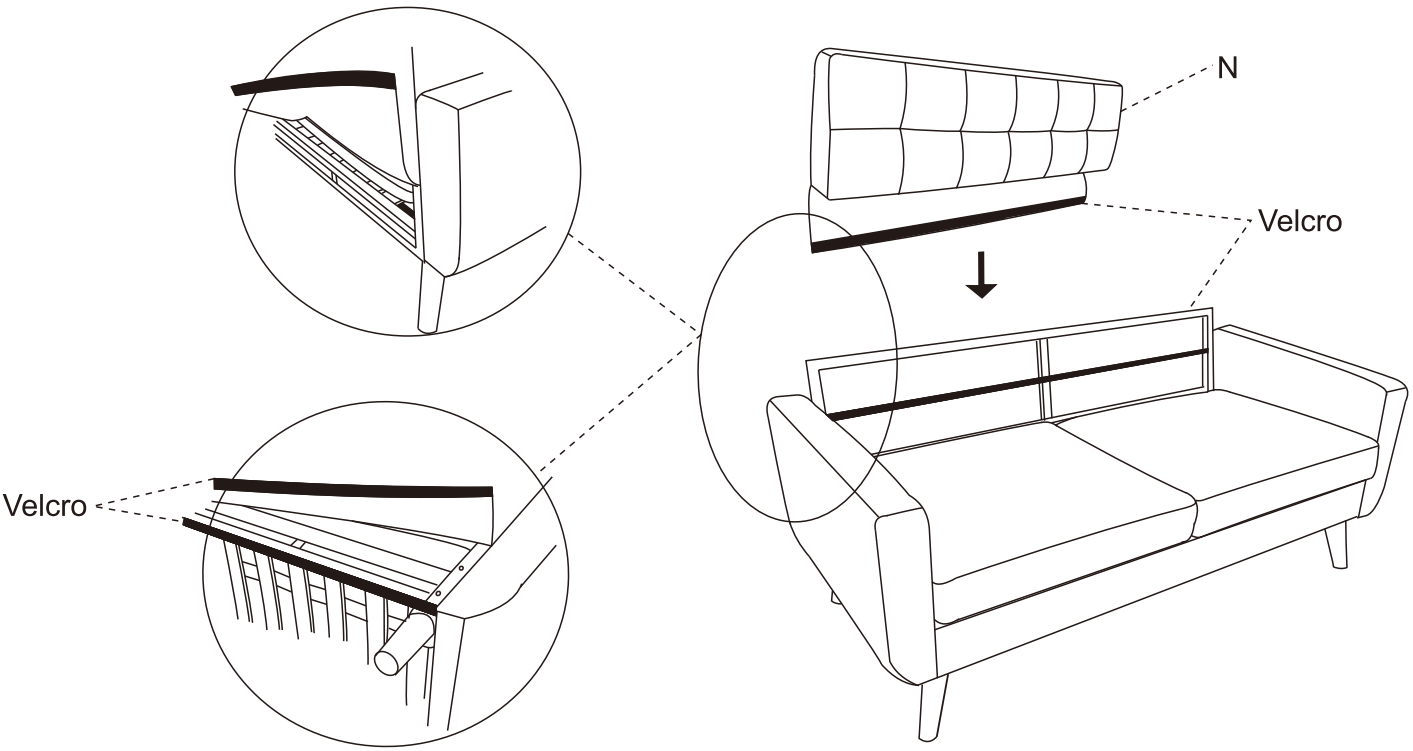

Attach component N to the back of the sofa using Velcro.

STEP 8

Care Instructions

Your furniture, when treated with care and affection, will endure for years to come. Each piece demands gentle upkeep to enhance daily comfort and extend its lifespan. Just like any cherished possession, when treated kindly, it reciprocates that kindness. Your furniture is crafted to support you and bring joy into your life, enriching your home and your experiences.

1.Place the sofa away from direct sunlight, or utilize curtains or blinds to minimize exposure.

2.Regularly clean the sofa with a dry, soft cloth or a vacuum equipped with a gentle attachment.

3.Address stubborn stains promptly by blotting the affected area with a soft cloth soaked in warm water and mild soap. Follow up by drying with a clean cloth.

4.Avoid excessive rubbing during cleaning, as it may damage the weave and cause discoloration.

5.We recommend affixing felt pads underneath the sofa to prevent floor scratches. Additionally, laying a rug beneath can provide both protection and aesthetic appeal to your living space.

6.Ensure even weight distribution on the cushions regularly for optimal care.

By adhering to these care instructions, your furniture will continue to serve you well in return. We look forward to welcoming you back soon!

Frequently Asked Questions

We understand that receiving damaged or defective products can be disappointing, and we're here to assist you every step of the way. Here's how to address common concerns and initiate a damage claim:

1.What should I do if my shipment is damaged or products received are defective?

We're genuinely sorry to hear about any inconvenience caused. Please reach out to us promptly, and our team will prioritize resolving the matter swiftly and effectively. To file a damage claim, follow these steps:

A. Retain the original box in case a return is required.

B. Take photos of the damaged box, the damaged part of the item, tracking number, and return label on the box to help us process a replacement or refund.

2.Can I return the product if I'm not satisfied?

While we uphold stringent quality standards and collaborate with experienced manufacturers, we acknowledge that dissatisfaction may arise. If you're still unsatisfied, you can initiate a return within 30 days of receiving the product. Simply message us with your reasons for return, and we'll facilitate the process.

3.How do I contact you if I encounter problems?

It's simple! Just drop us a message or email us at xlmcustomerservice @gmail.com and we'll be more than happy to assist you. Rest assured, we aim to respond promptly within 24 hours to address any issues you may encounter.