TEAR SHEET



Dino 13" Cordless Accent Lamp

Item # TOB 3245PWT-PWT-CL

Designer: Thomas O'Brien

Height: 13.25"
Width: 6.5"
Base: 3.25" x 4.25" Rectangle
Finishes: HAB, PWT
Shade Treatments: HAB, PWT
Shade Details: 4" x 6.5" x 6.25"
Lightsource: Rechargeable LED w/ Touch Dimmer
Wattage: 1.7w (60 - 250lm)
Weight: 4 Pounds
Note: Rechargeable LED Lightsource and Charging Cable Included

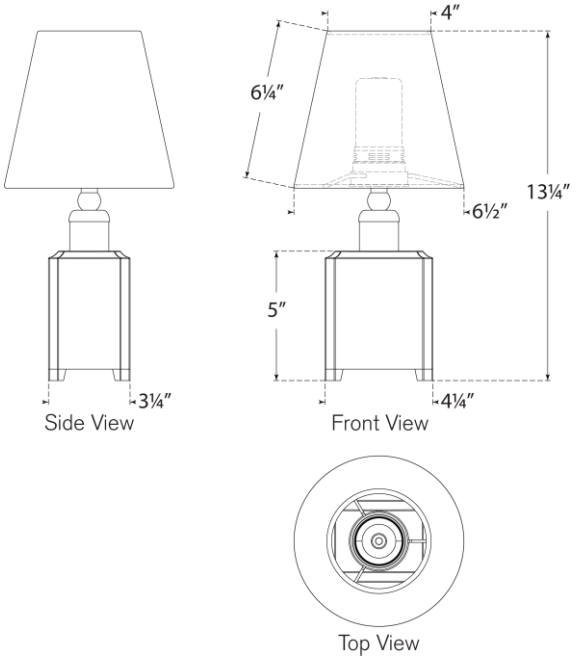

VISUAL COMFORT & CO.

DAMP LED