Instructions

Reclining Desk Chair with Footrest

About Us

Our Journey to Enhanced Seating Comfort

On average, individuals spend about nine hours each day seated. Our mission is to transform these hours into a more enjoyable experience for everyone. We are committed to enhancing our products through the integration of various technologies and materials, such as ergonomics and carbon fiber. Our goal is to provide optimal support and comfort during activities like reading, gaming, and web browsing.

Advanced Upholstery for Durability

Our chairs are covered with a multi-layered synthetic leather that surpasses the comfort, strength, and durability of traditional PU leather. This material is specifically chosen for its resistance to the typical peeling seen over time in standard chair coverings.

Factory Direct Advantage

A key aspect that sets we apart from other office chair brands is our genuine factory-direct approach. Unlike typical office chair retailers that stock a range of brands and mark up prices for profit, we offer our products directly from our factory, ensuring both quality and value.

Ergonomic Excellence

Each our chair is born in our dedicated lab and testing facilities. We meticulously design and test every component to enhance comfort and longevity. Our engineering team conducts extensive research to understand how people use our chairs, allowing us to continually refine their ergonomic support and ensure they meet the highest standards of comfort and functionality.

Accessories list

A x5

B x1

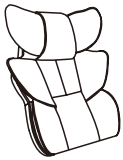

C x1

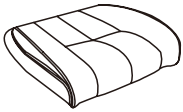

D x1

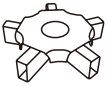

E x1

F x5

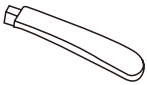

G x1

H x1

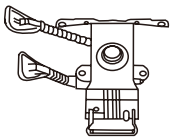

I x2

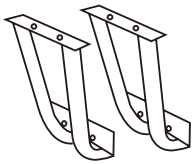

J x2

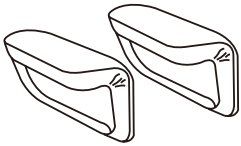

K x1

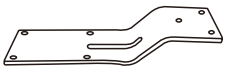

L x2

M x4

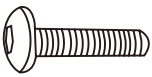

T x4

N x14

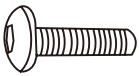

O x10

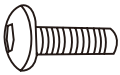

P x3

Q x1

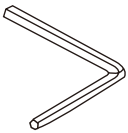

R x2

S x1

Installation Steps

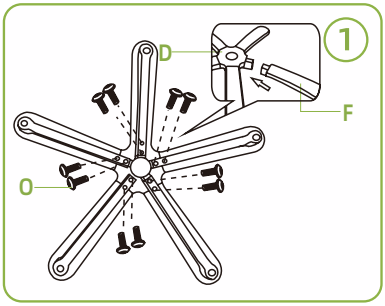

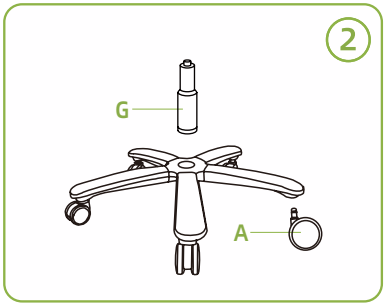

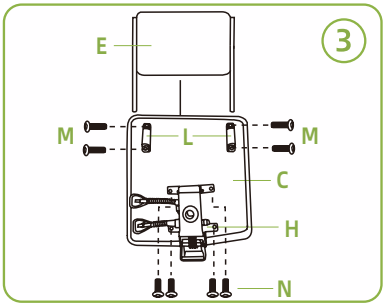

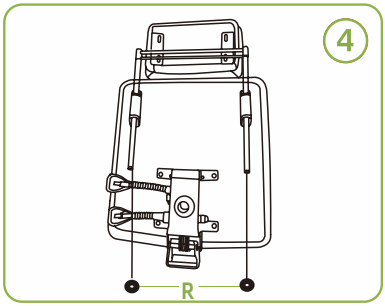

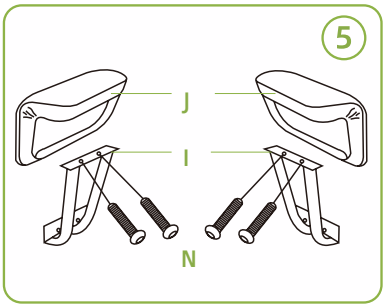

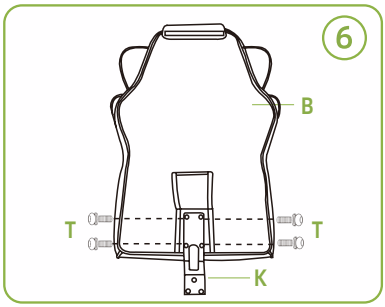

Installation Steps

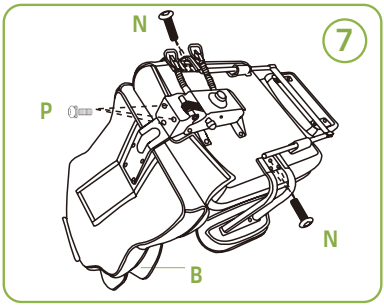

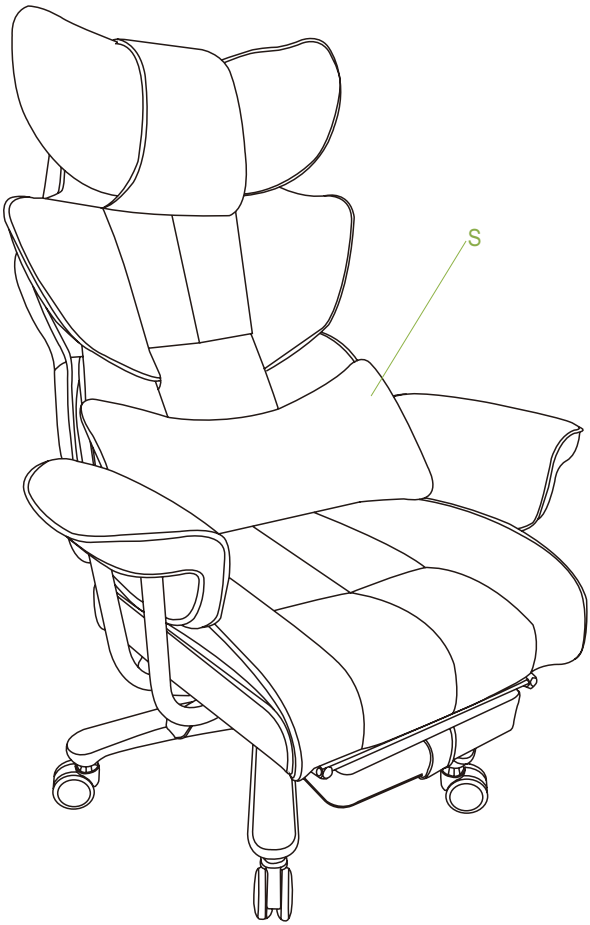

Specification

CONSTRUCTION AND MATERIAL

Material:	Leather
Style:	Modern
Head Pillow:	No
Lumbar Pillow:	No
Hydraulic Gas Piston:	Class4
Wheelbase:	Metal
Caster:	Nylon

ADJUSTABILITY

Height Adjustable Seat:	20.08"-23.23"
Multi-tilt Mechanism:	Tilt Lock, Tilt Angle Lock
Reclining Backrest:	90°-160°

GENERAL INFO

Assembly Required:	Yes
Package Size:	32.68" (L)x25.59"(W) x14.96"(H)
Weight(Approximate):	70.76lbs

After Sales & Safety Info.

A warranty claim is available for our chairs.
Should you encounter any inquiries regarding product-related matters or logistical concerns, kindly reach out to our customer service team. They shall promptly respond to provide you with timely assistance.

Warranty

1. Each office chair offered by our company includes a limited warranty, providing assurance that your choice is prudent and safeguards its value.

2. Should you have doubts about your office chair's qualification for limited warranty coverage, we encourage you to reach out to our customer service team for verification.

3.Please note that the warranty does not extend to incidents involving theft, loss, or disappearance of the chair.

4.Undertaking any form of maintenance or repairs on the chair will result in the nullification of the warranty.

Safety Information