ASSEMBLY INSTRUCTIONS

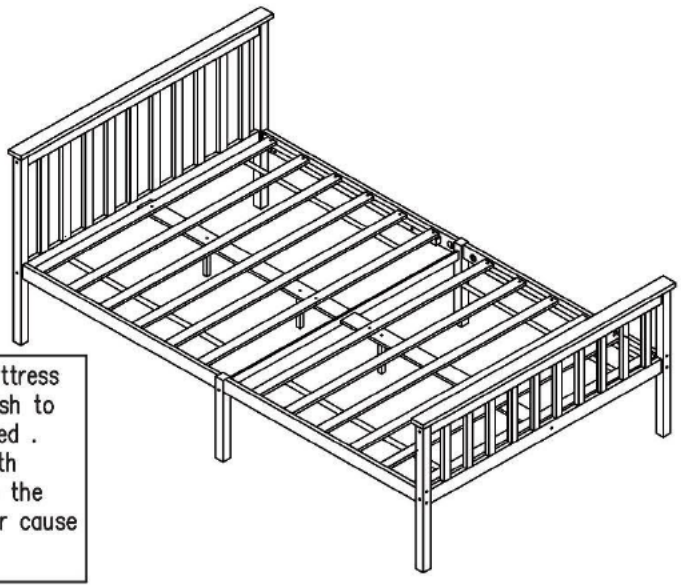

Attention: Please remove mattress from the bed should you wish to clean the floor under the bed . Dragging the bed around with mattress might compromise the bed construction, stability or cause permanent damage.

In the unlikely event parts are missing or damaged in transit

Please contact the seller on the website your purchase was made.
Our customer service team will assist.
We are able to arrange replacement parts to complete assembly.

HARDWARE

A	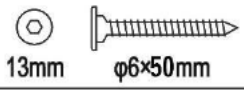 13mm φ6×50mm	4 X
B	 T-Nut	8 X
C	 Wood Dowel φ8×30mm	24 X
D	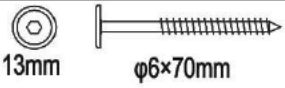 13mm φ6×70mm	12 X
E	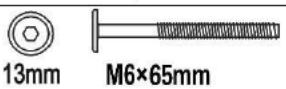 13mm M6×65mm	8 X
F	 Wood Dowel φ8×60mm	2 X
G	 8mm φ4×25mm	28 X
H	 Allen Key	1 X

I	 Screw driver (not provided)	1 X
J	 M6×120mm Tread Stud	2 X
K	 Nut M6	4 X
L	 Half Moon Spacer	4 X
M	 Spanner	2 X
N	 13mm M6×65mm	6 X
O	 Wood Dowel φ6×30mm	80 X

COMPONENTS

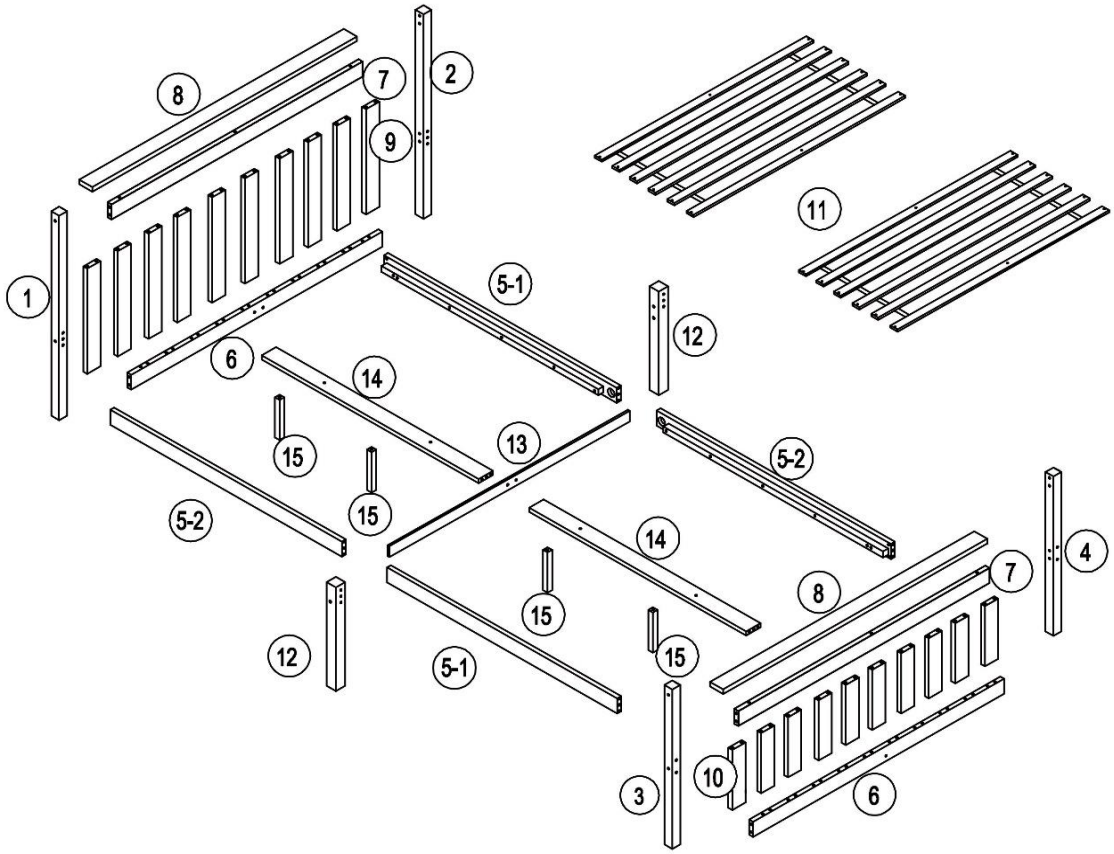

Step 1

C	φ8×30mm Wood Dowel	24 X

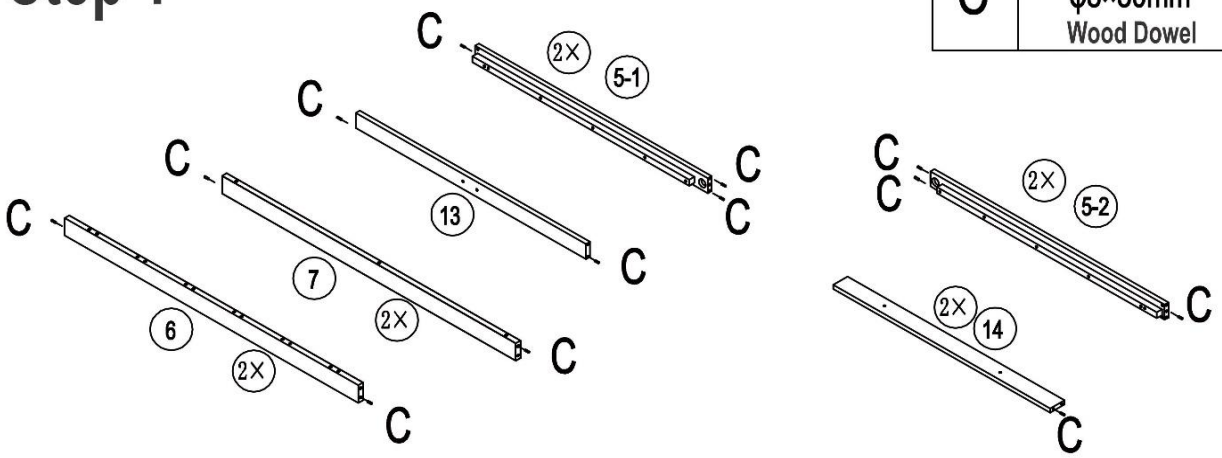

Step 2

O	φ6×30mm Wood Dowel	80 X

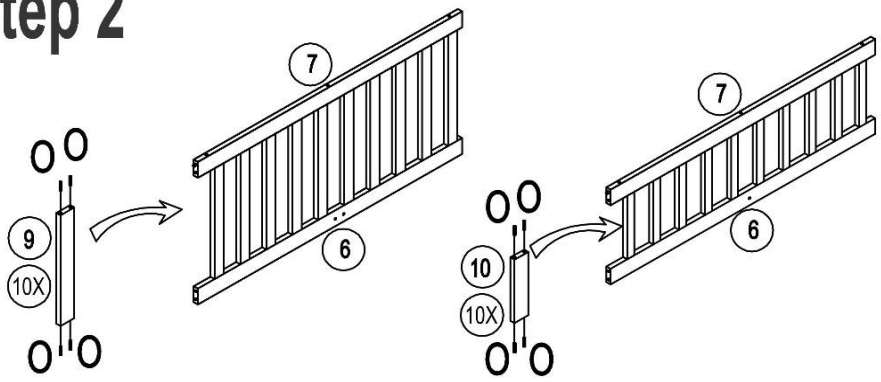

Step 3

D	13mm φ6×70mm	8X

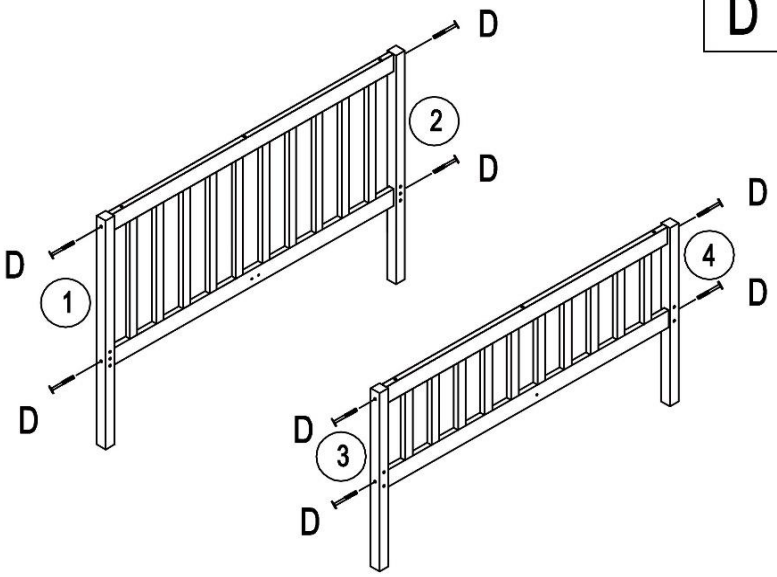

Step 4

N	13mm M6×65mm	6X

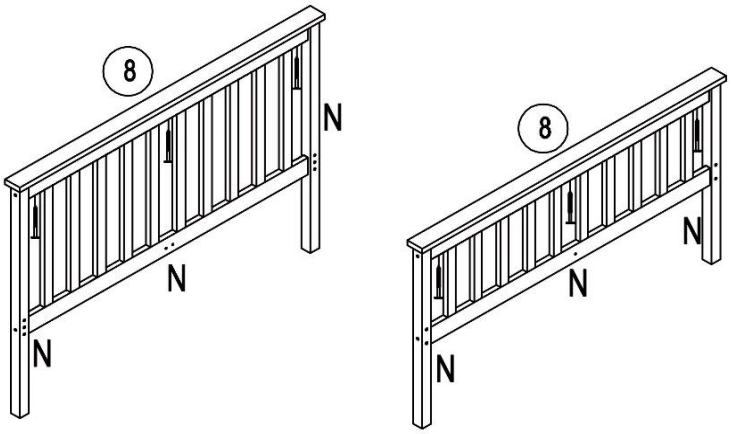

Step 5

D	13mm φ6×70mm	2X
F	φ8×60mm Wood Dowel	2X

Part (13) brown wood, included in the box, packed next to the bed slats (11)

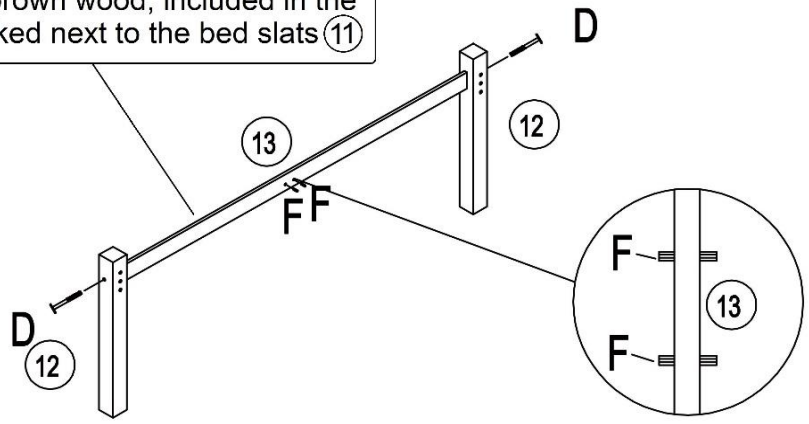

Step 6

M	Spanner	2x	E	13mm M6×65mm	4x
J	M6×120mm Tread Stud	2x	B	T-Nut	4x
			K	Nut M6	4x
			L	Half Moon Spacer	4x

Step 6a

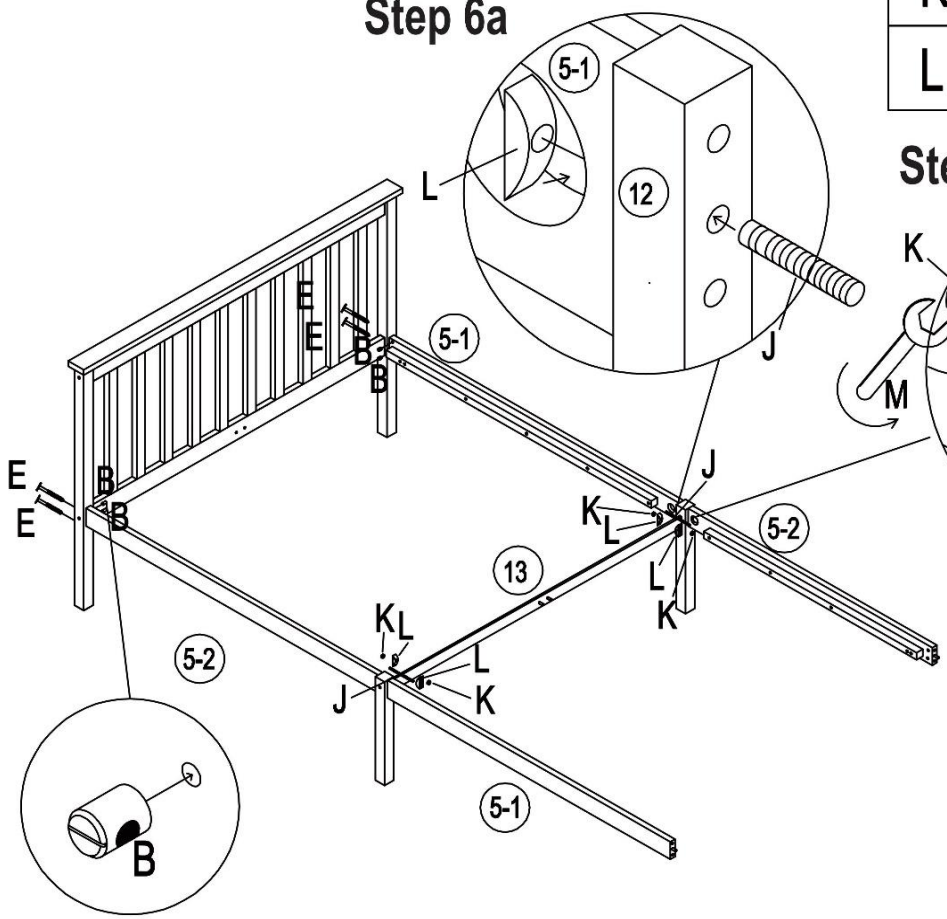

Step 6b

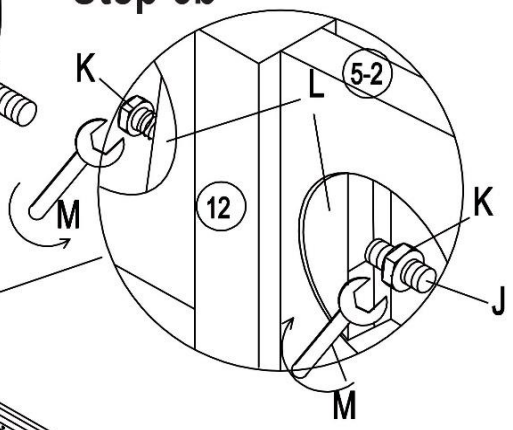

Step 7

A	13mm φ6×50mm	4x
D	13mm φ6×70mm	1x

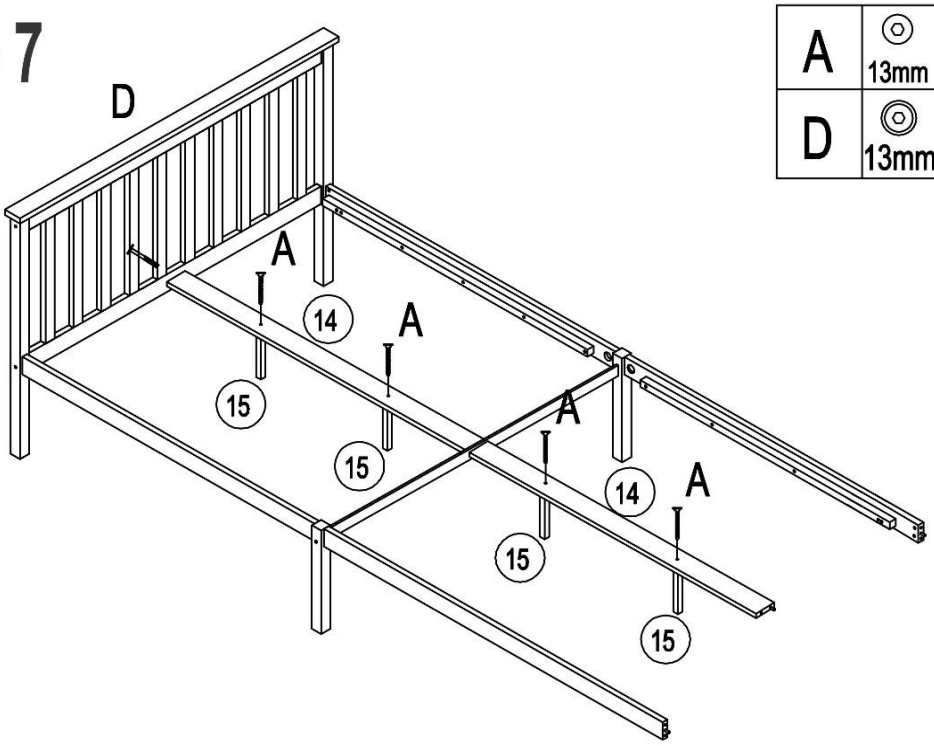

Step 8

D	13mm φ6×70mm	1x
E	13mm M6×65mm	4x
B	T-Nut	4x

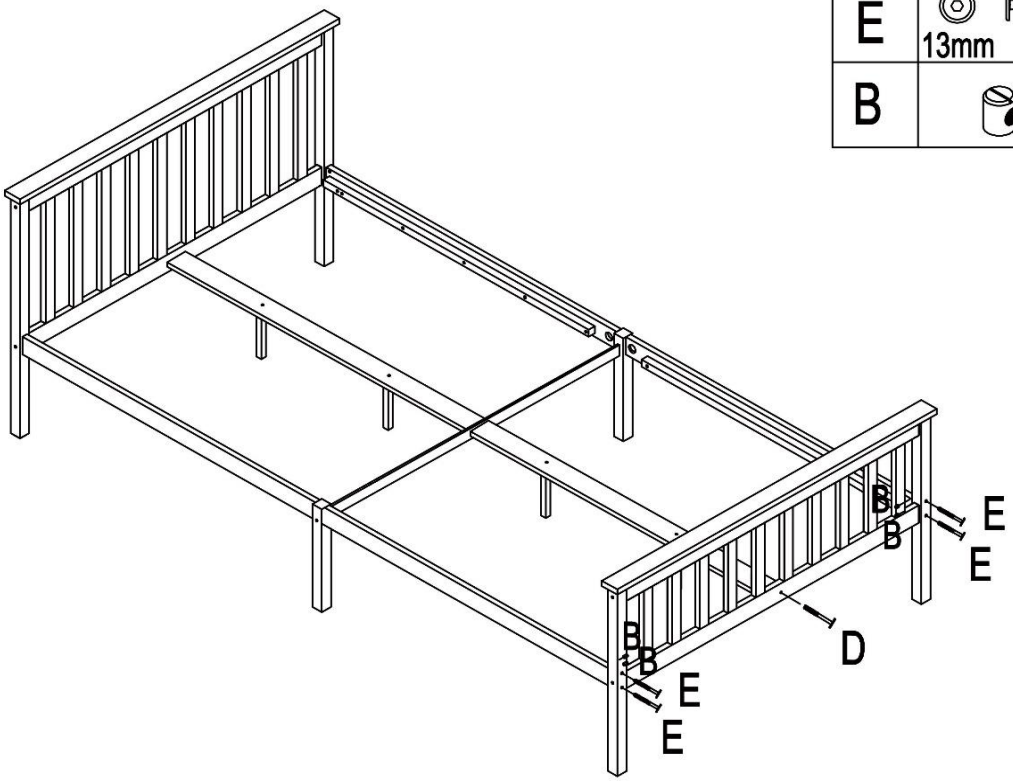

Step 9

G	8mm φ4×25mm	28x

