Assembly Manual

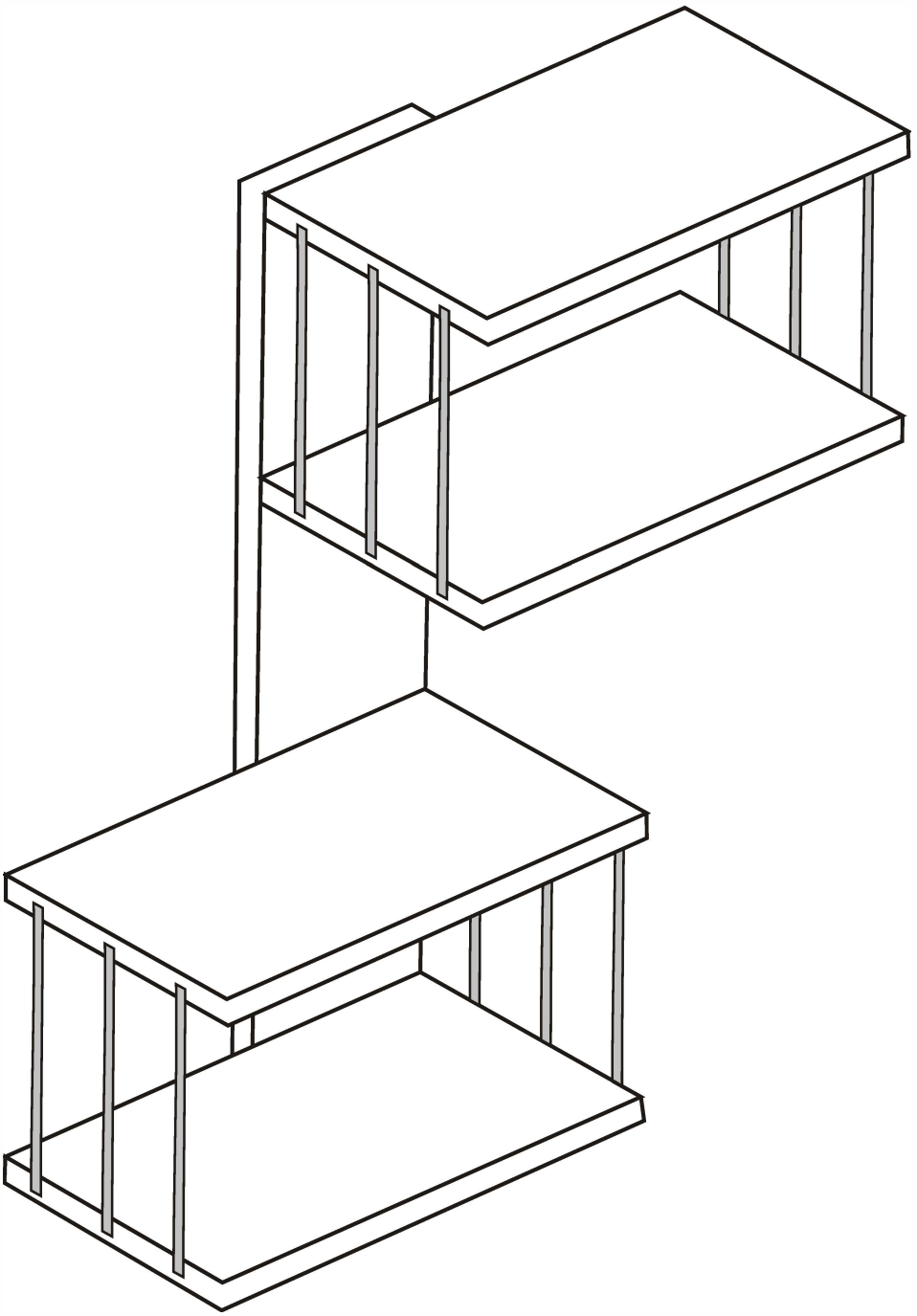

ATTENTION !!!

...

Minifix is the main connection material used in Decortile products , Before starting assembly , Please check the drawings below

ACCESSORY LIST

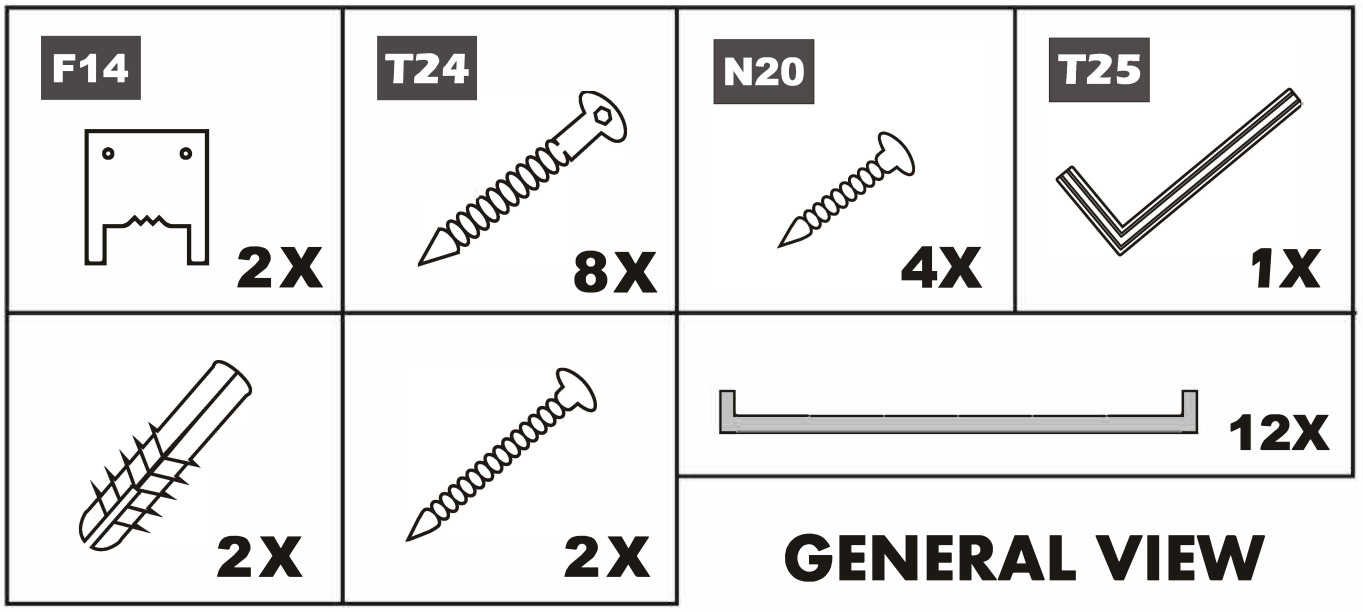

GENERAL VIEW

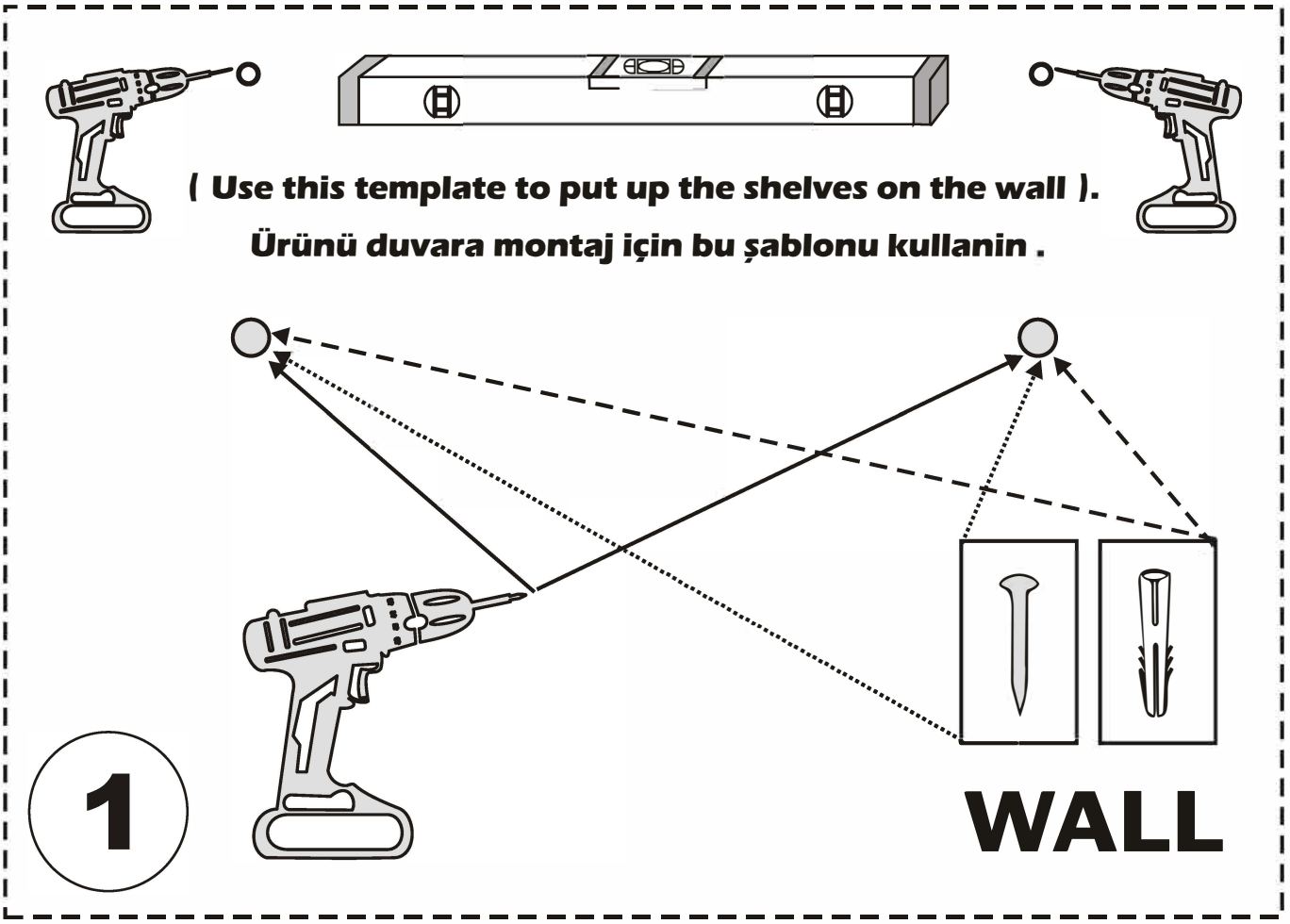

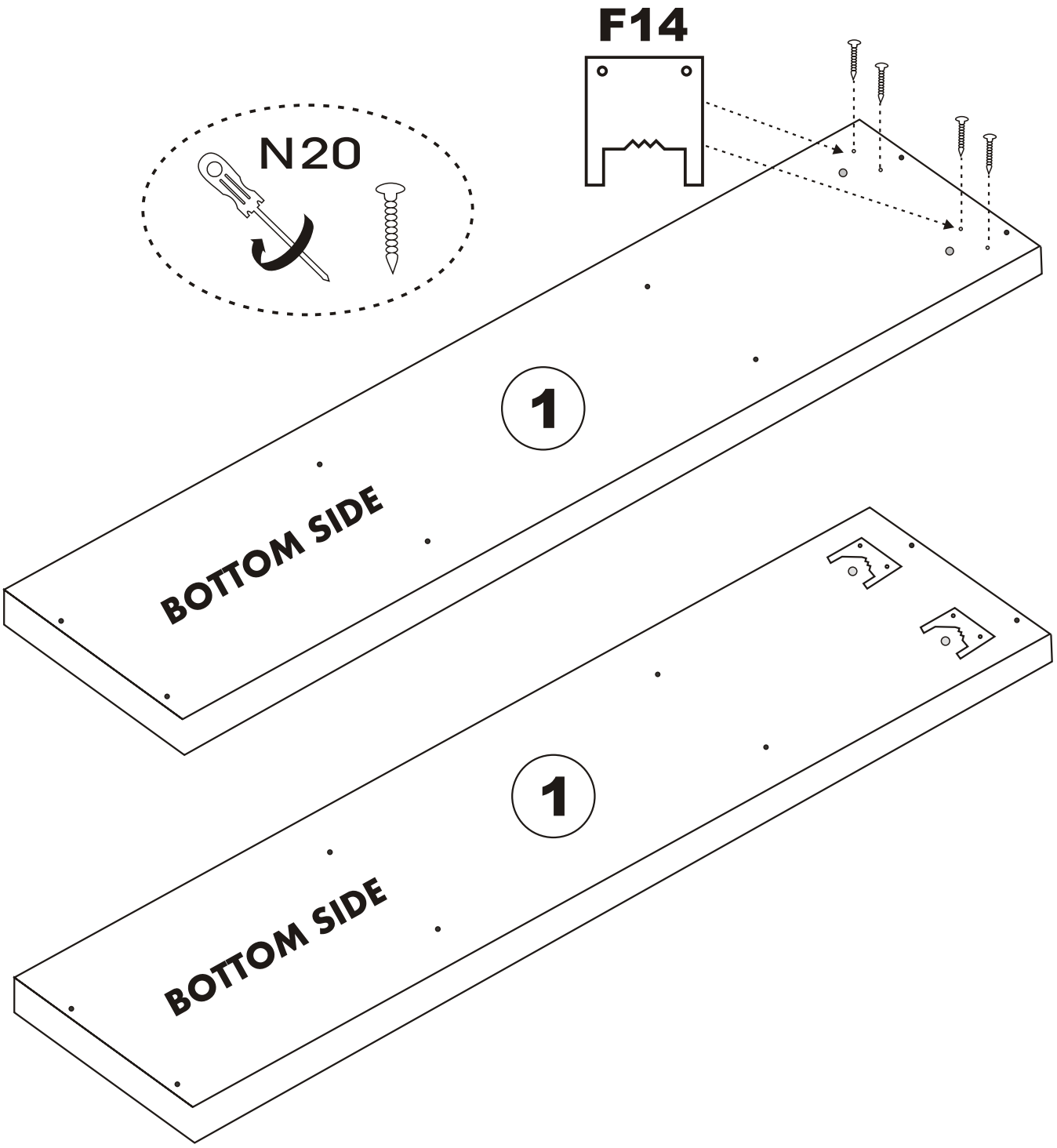
F14
N20
1
BOTTOM SIDE
1
BOTTOM SIDE

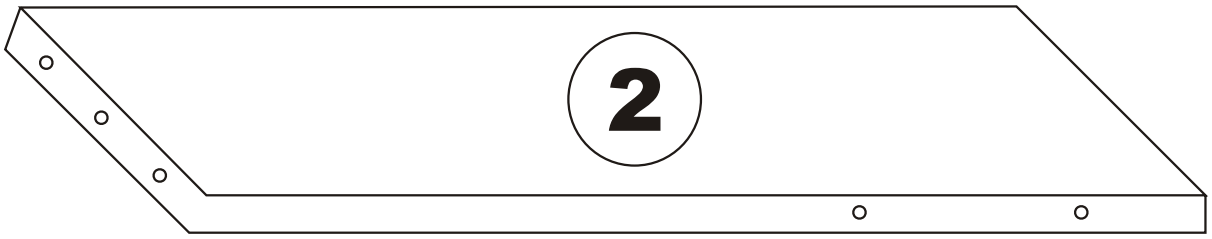
2

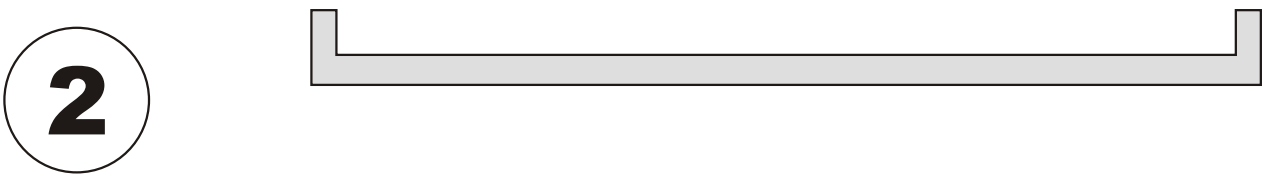
2

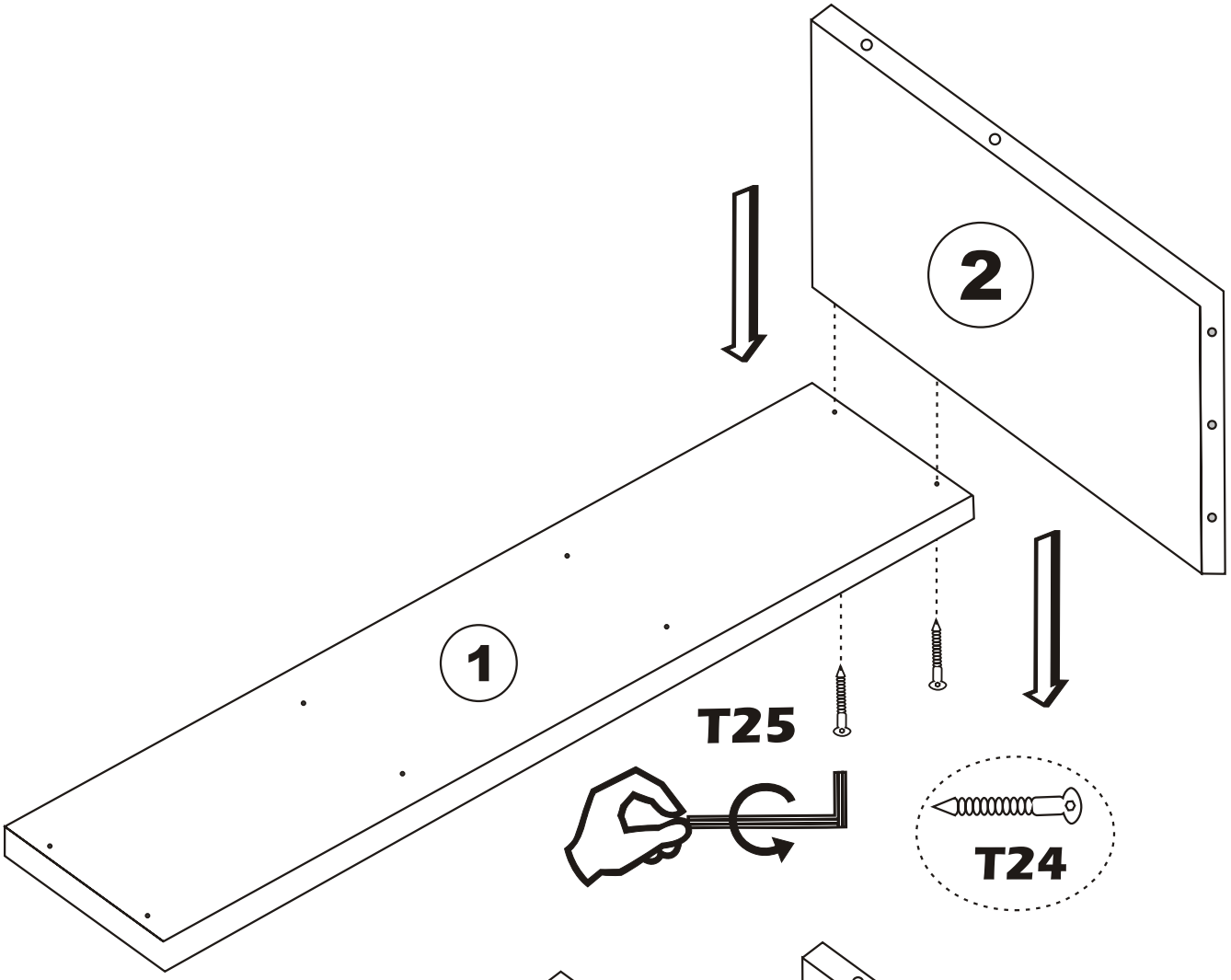

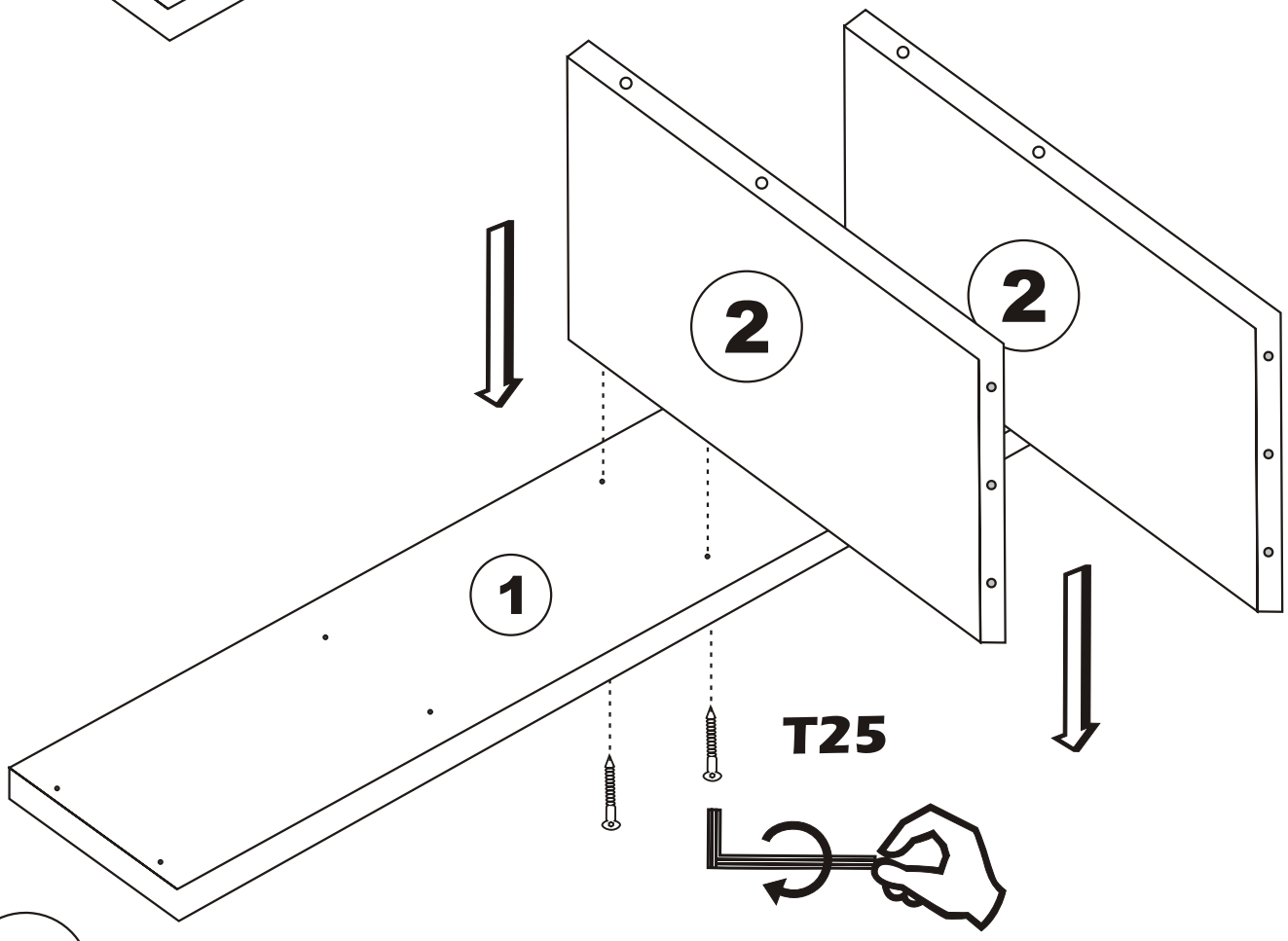

3

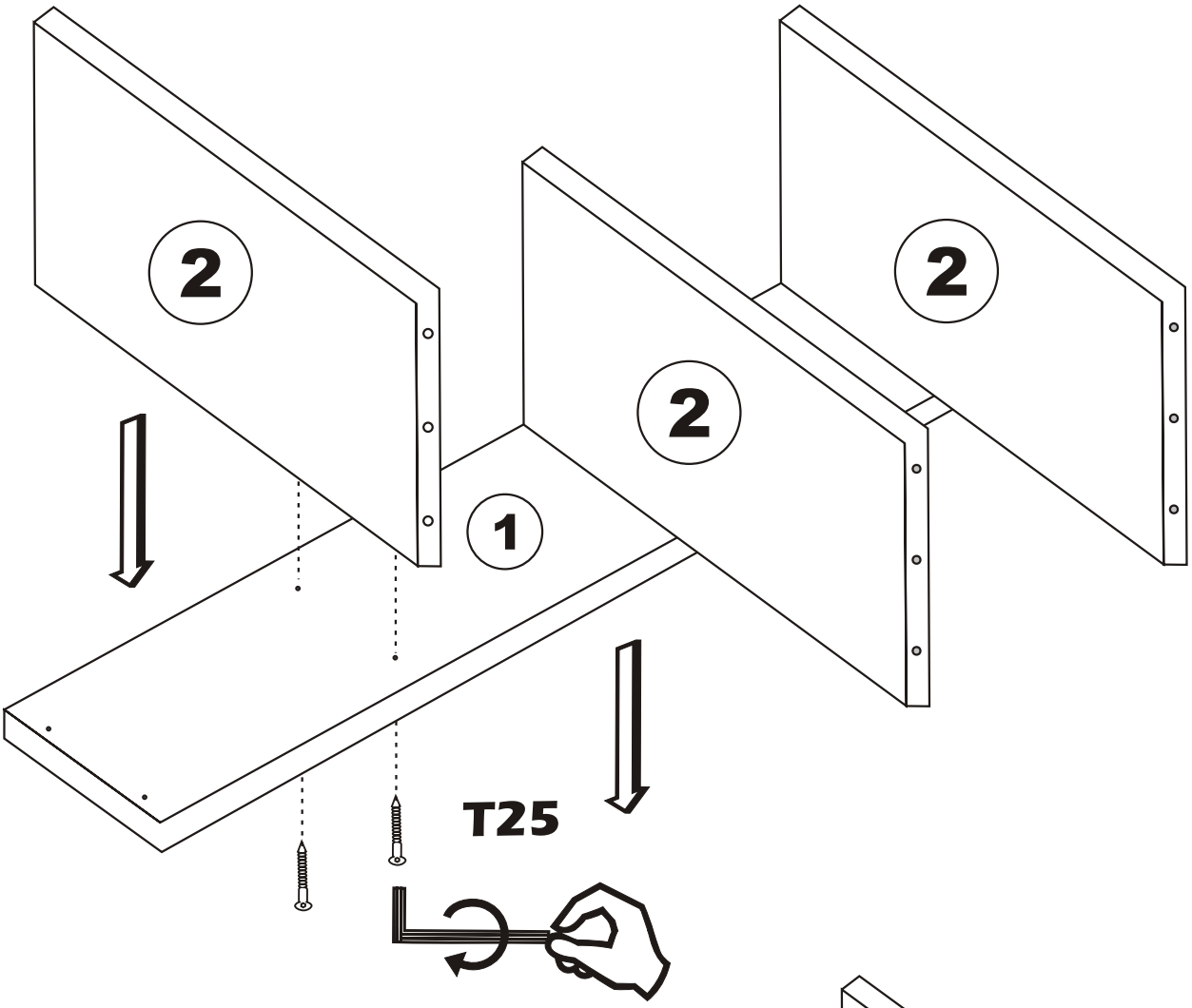

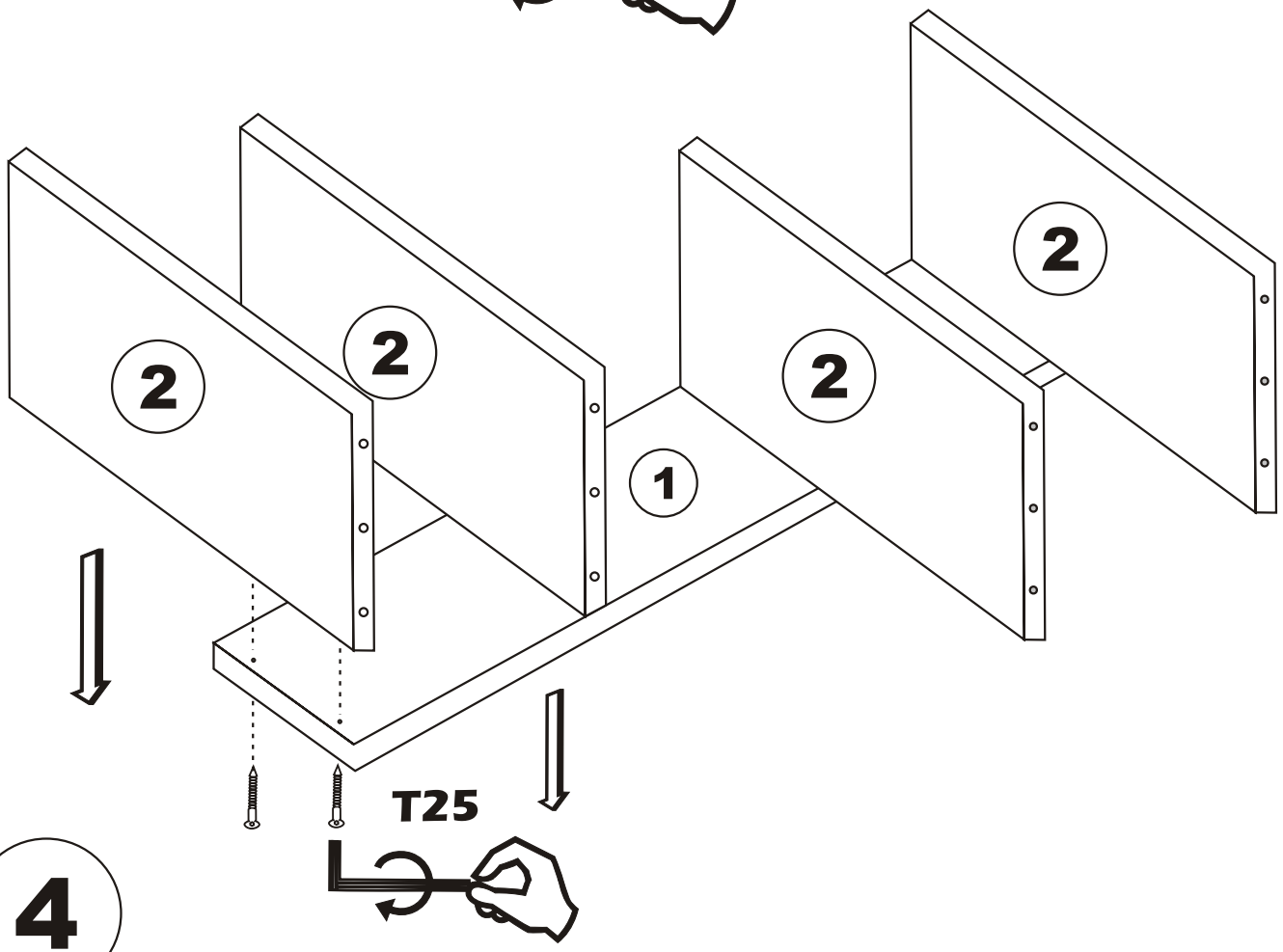

4

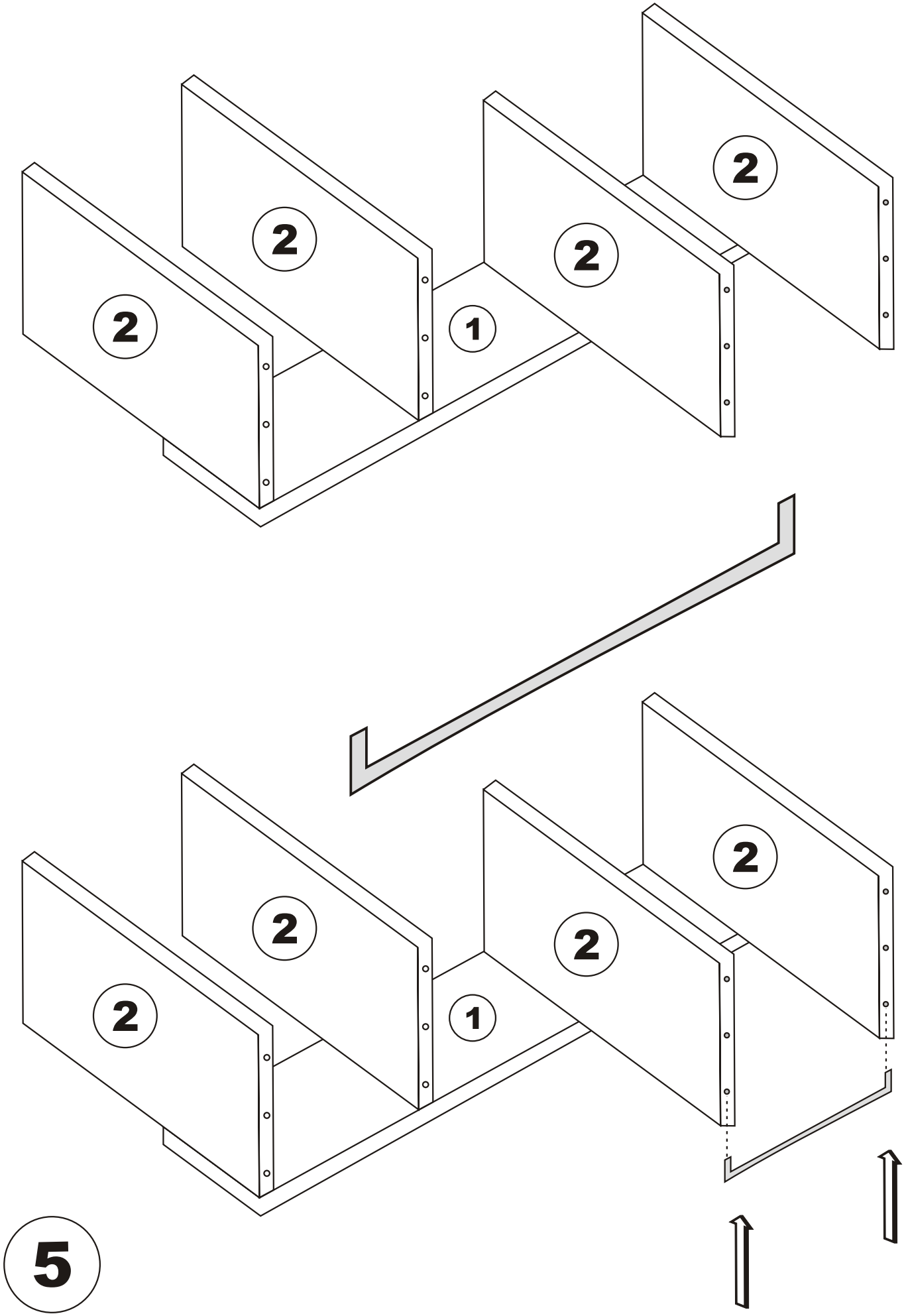
2
2
2
2
1
2
2
2
2
1
5

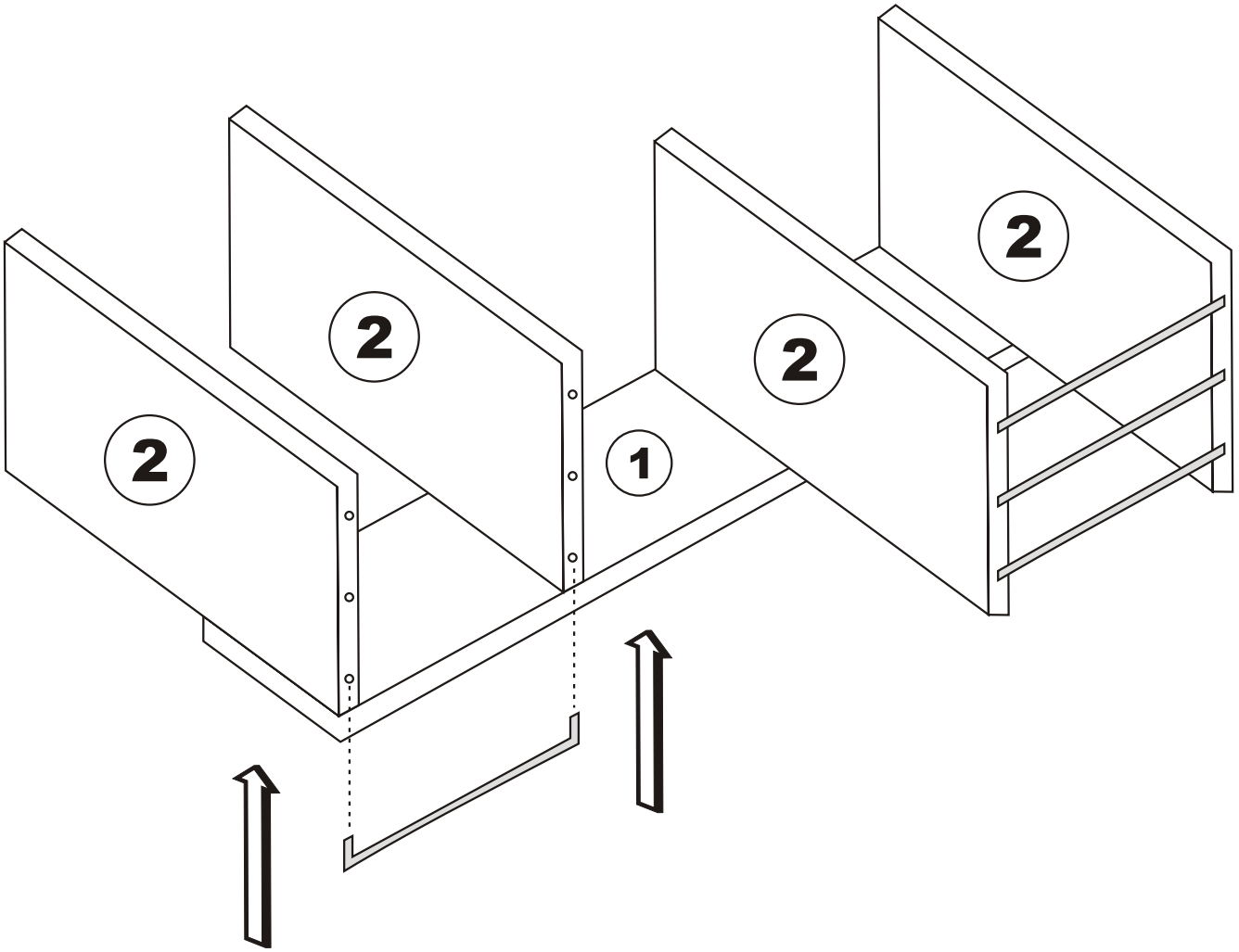

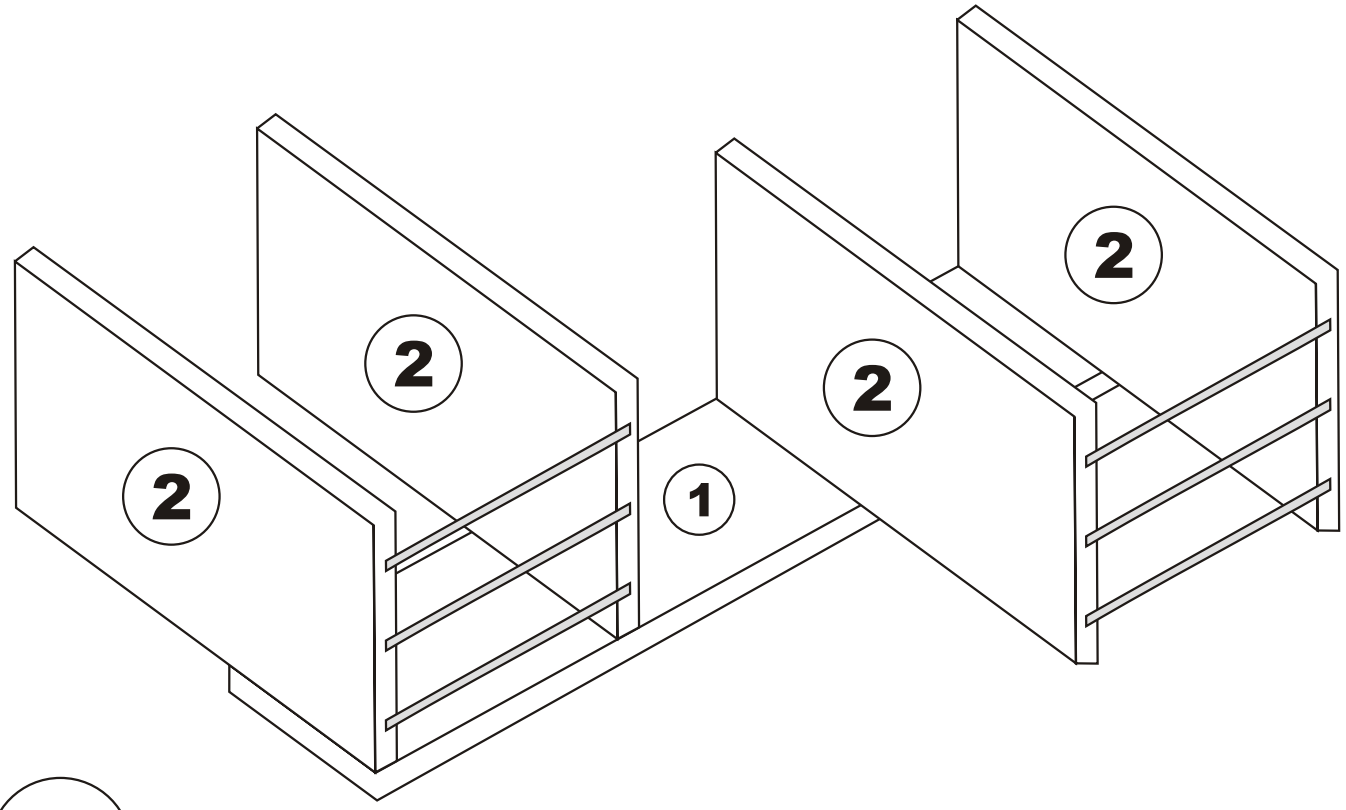

6

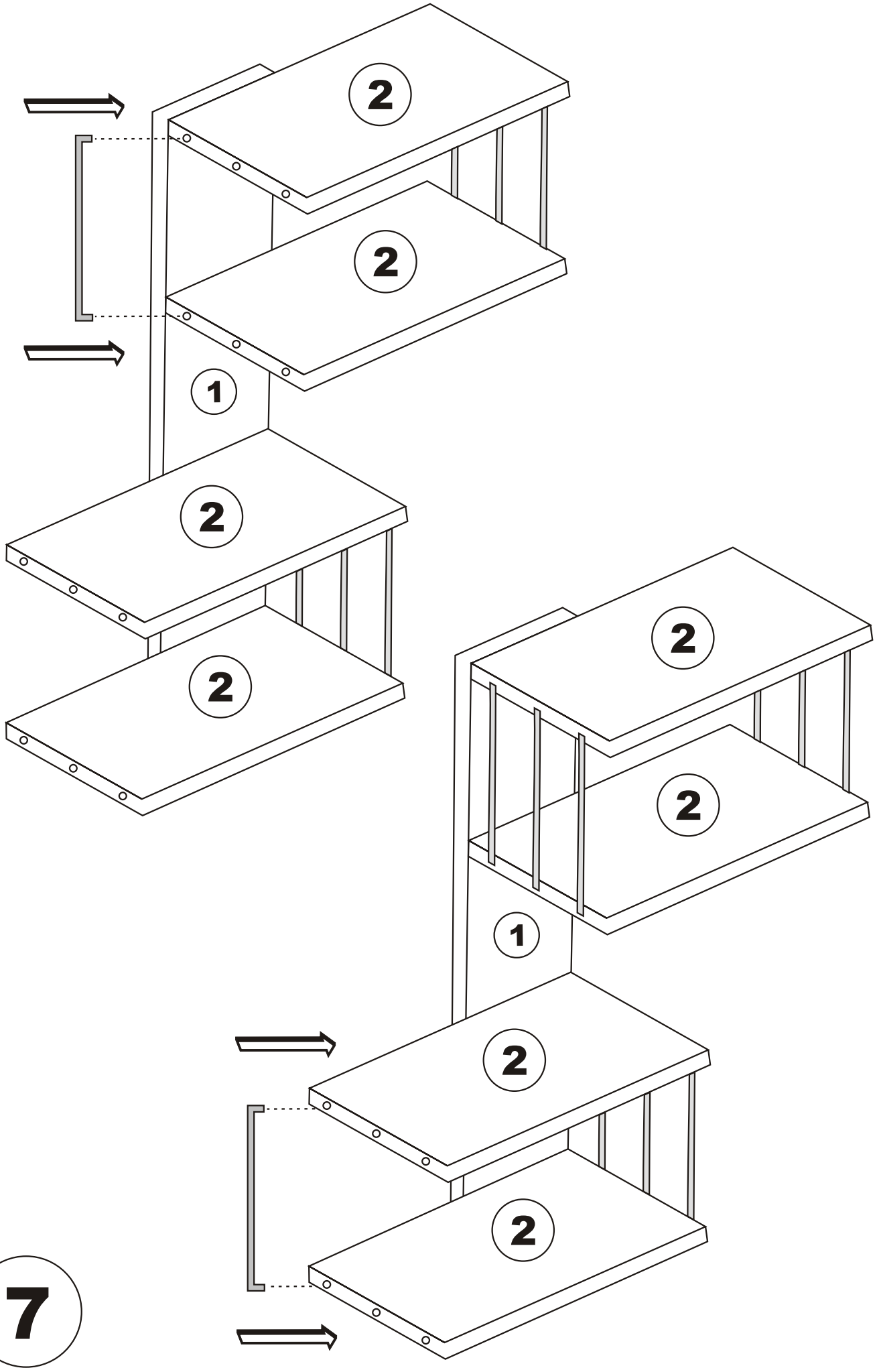

7