A	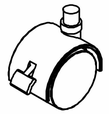	— 2
B		— 2
C		— 4
D		— 1
E		— 2
F	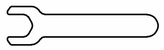	— 1

Mobile File Cabinet Assembly Instruction

Step 1

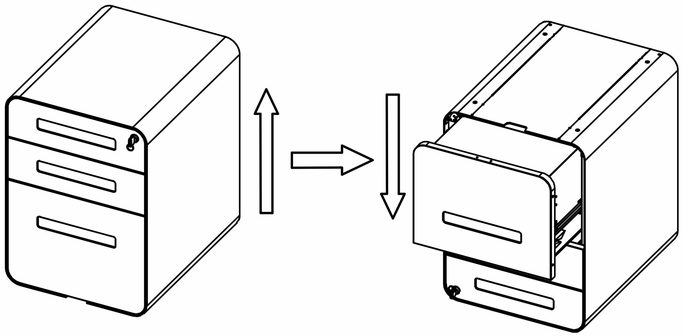

PLEASE SCAN THE QR CODE AND CHECK THE ASSEMBLE VIDEO

Step 2

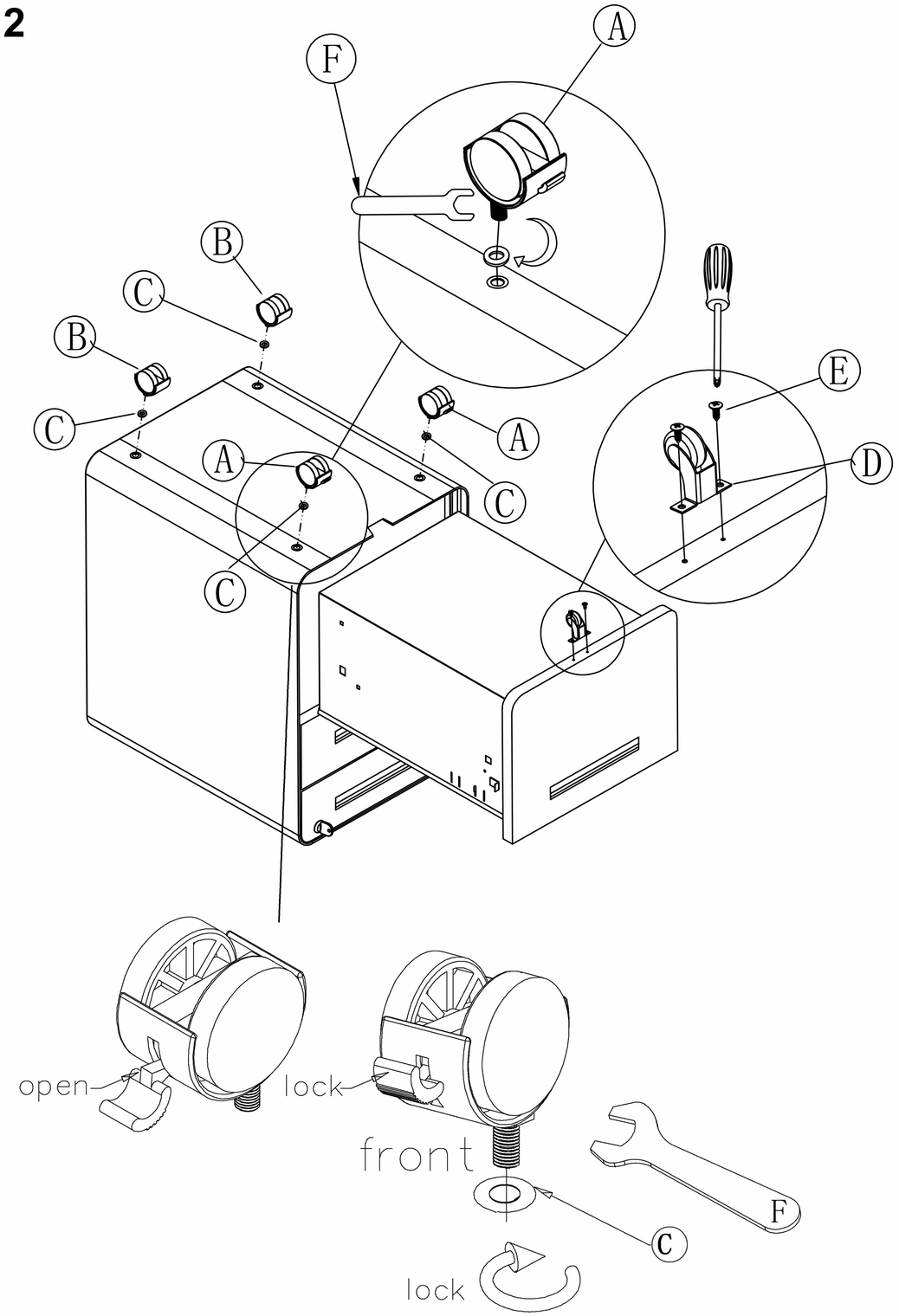
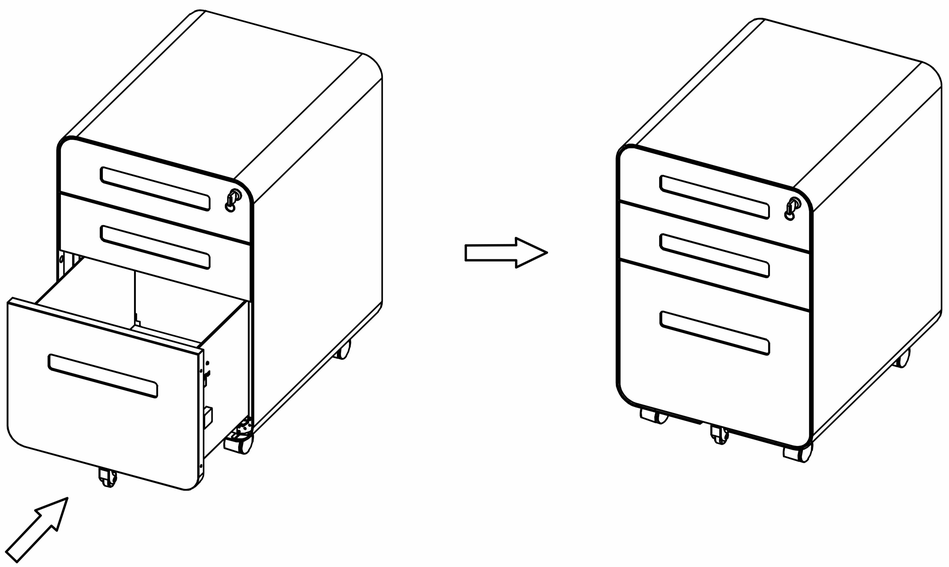
Step 3