NOTICE

Please make sure that you have all parts indicated and they are in good condition before you begin assembly of this item.
Refer to part list and hardware list below for guidance.
* This item should be assembled on a soft surface to prevent scratching the finish during assembly.
* This item may require periodic tightening.
* If you are having difficulty, our friendly Customer Care team is always here to help.
Please email

PREPARATION

* Before beginning assembly of product, make sure all parts are present. Compare parts with part contents list and hardware contents list.
* If any part is missing or damaged, do not attempt to assemble the product.
* Estimated Assembly Time: 10 minutes.
* Tools Required for Assembly (included): Allen Key

CARE AND MAINTENANCE

RATTAN CARE : Do not expose your furniture to any liquids. All liquids should be wiped up immediately with a soft, slightly damp cloth in the direction of the rattan. Do not expose your furniture to strong or direct sunlight, heat outlets, open windows and dampness. Excessive exposure to sunlight can cause fading of your furniture finish. Extreme temperatures and humidity changes can cause cracking and splitting.
WOOD CARE : Always use felt pads under all articles to prevent discoloration or softening or the lacquer. Plastic and rubber bases on items can discolor wood. Wipe up spills immediately and avoid common hazards such as hot dishes, harsh solvent and abrasives. Cleaning should be done with a soft lint free cotton cloth dampened with water or furniture polish. On highly used surfaces we recommended applying a quality paste wax which should be used on a regular basis to provide additional protection from scratches and spills. How often you apply the wax depend on how much wear the furniture receives.

Part List and Hardware List

NO.	DESCRIPTION	PICTURE	QTY
1	Top	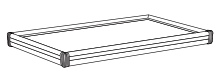	1
2	Legs	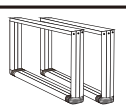	2
3	Bolt	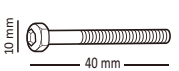	12
4	Ring / Spacer		12
5	Allen Key		1

47.24" X 23.62" X 17.91"

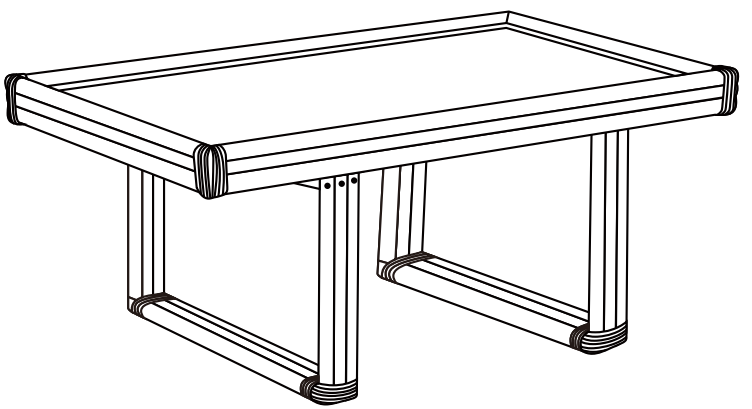

WARNING

Weight Capacity - 220 LBS
Warning : Do not stand on Table
Warning : Do not over torque bolts.

PREPARATION

* Before beginning assembly of product, make sure all parts are present. Compare parts with part contents list and hardware contents list.
* If any part is missing or damaged, do not attempt to assemble the product.
* Estimated Assembly Time: 10 minutes.
* Tools Required for Assembly (included): Allen Key
* If you are having difficulty, our friendly Customer Care team is always here to help. Please email

Hardware is located inside the box. You can find them placed near the sign 'HARDWARE INCLUDED'

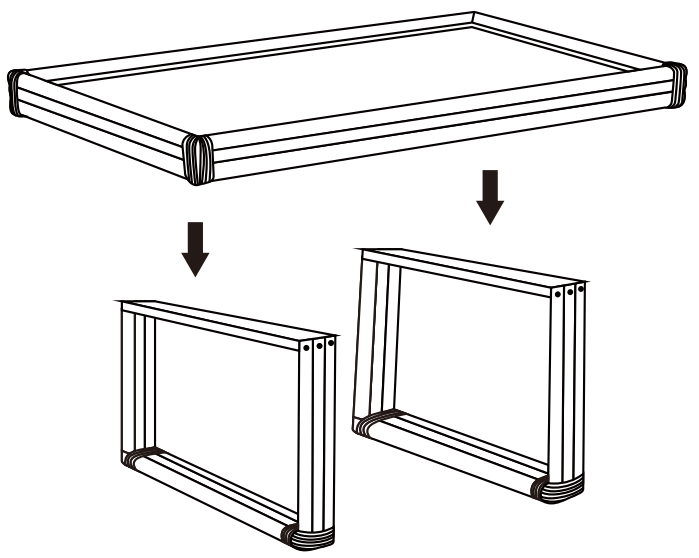

OPTIONS 1 : PUT THE TOP AND LEGS TOGETHER LIKE IN THE PICTURE.

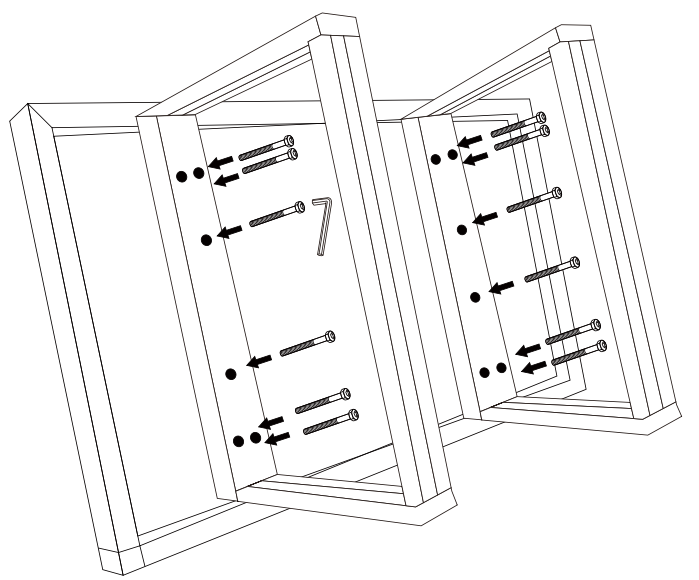

OPTIONS 2 : COMBINE THE TOP AND LEGS, THEN TIGHTEN USING BOLTS AND ALLEN KEYS.

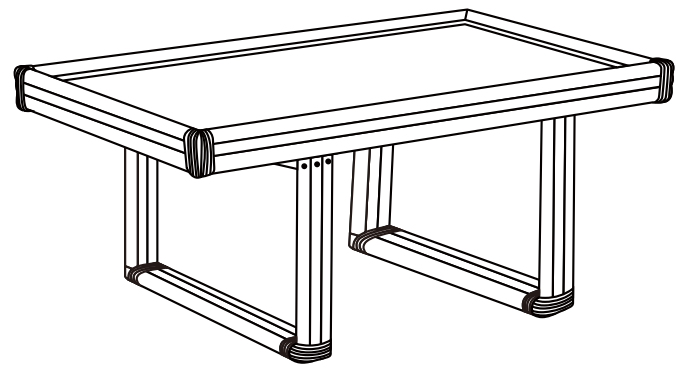

OPTIONS 3 : YOUR TABLE IS READY