LOFT BED
ASSEMBLY INSTRUCTIONS

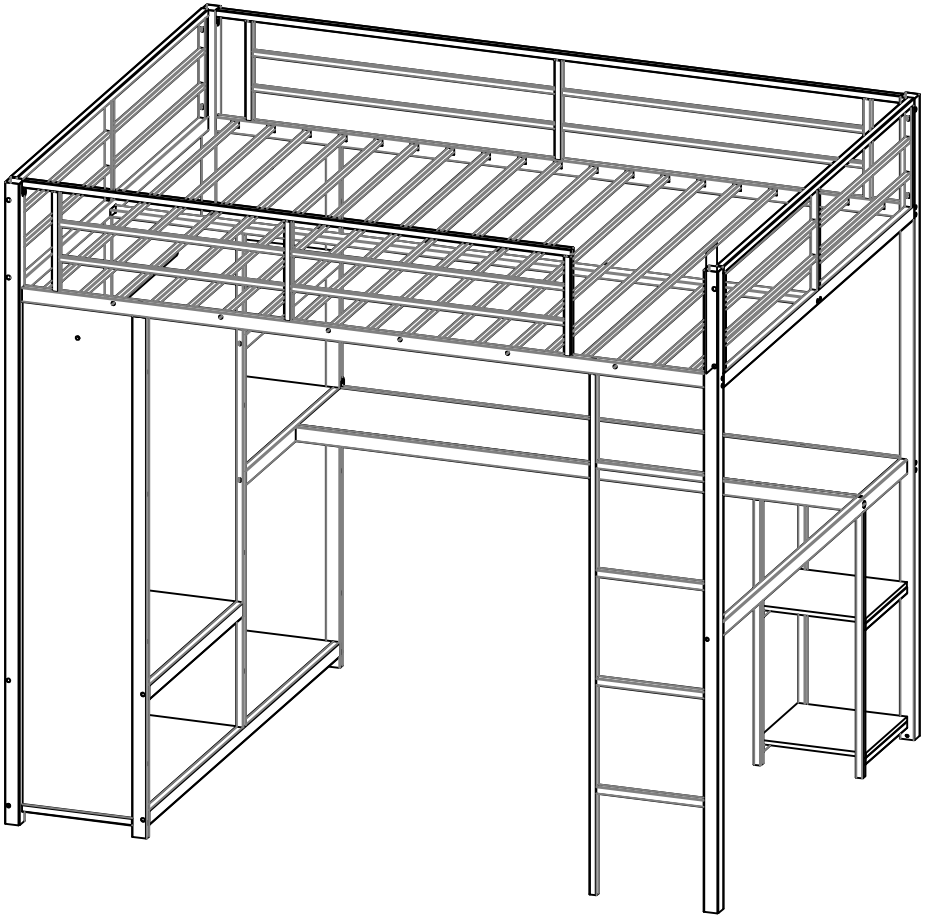

Please use the screws according to the instructions

SAFETY WARNINGS AND GENERAL NOTES:

1. Follow the information on the warnings on the bunk bed end structure and on the carton. Do not remove the warning label from the bed.
2. Always use the recommended size mattress on mattress support, or both, to help prevent the likelihood of entrapment or falls.
3. Do not allow children under 6 years of age to use the upper bunk.
4. Periodically check and ensure the guardrail, ladder and other components are in their proper position, free from damage, and all connectors are tight.
5. Do not allow horseplay on or under beds.
6. Always prohibit jumping on the bed.
7. Prohibit more than one person on upper bunk.
8. Always use the ladder for entering and leaving the upper bunk.
9. Do not use substitute parts. Contact the manufacturer or dealer for replacement parts.
10. Use of a night-tight may provide added safety precaution for a child using the upper bunk.
11. Always use guardrails on both long sides of the upper bunk.
12. If the bunk bed will be placed next to a wall, the guardrail that runs the full length of the bed should be placed against the wall to prevent entrapment between the bed and the wall.
The use of water or sleep flotation mattresses is prohibited.
13. **STRANGULATION HAZARD**-Never attach or hang items to any part of the bunk bed that are not designed for use with the bed; for example, but not limited to, hooks, belts and jump ropes.
14. Keep these instructions for future reference.
15. We recommend assembling your bunk bed on the shipping carton to protect your floor or carpet.
16. Be certain all staples are out of the box before beginning assembly on the shipping carton.
17. USE ONLY MATTRESSES WHICH ARE AS THE TABLE BELOW ON UPPER AND ON LOWER BUNKS.
Up bed (bunk bed and tribed included)

Mattress size	Length	Width	Thickness
FULL Standard	74"-75"	53"-54"	6"max

18. SURFACE OF MATTRESS MUST BE AT LEAST 5"(127MM) BELOW THE UPPER EDGE OF GUARDRAILS.
19. Replacement Parts:
Replacement Parts, including additional guardrails, may be obtained from any of our dealers.

Bed parts view

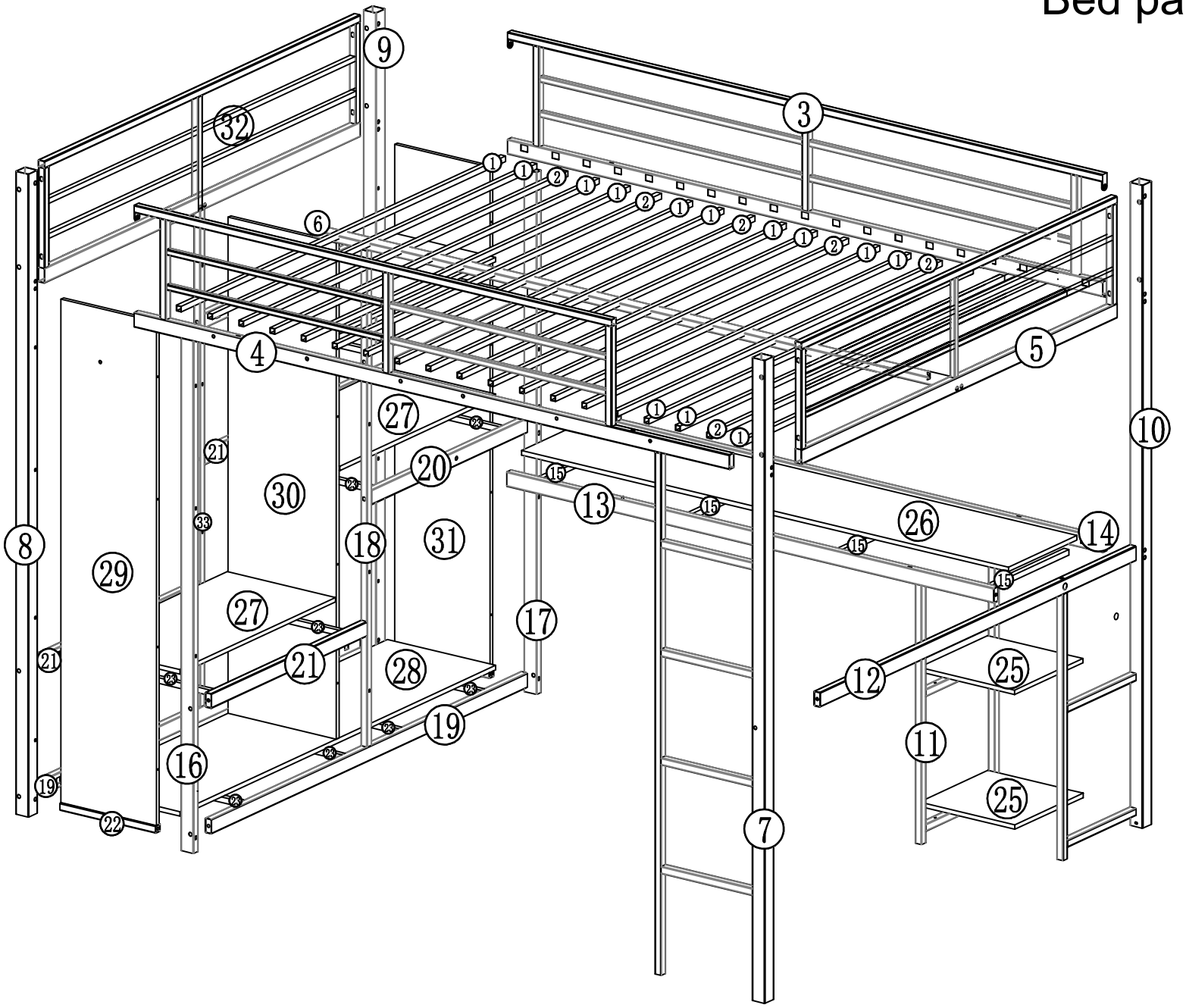

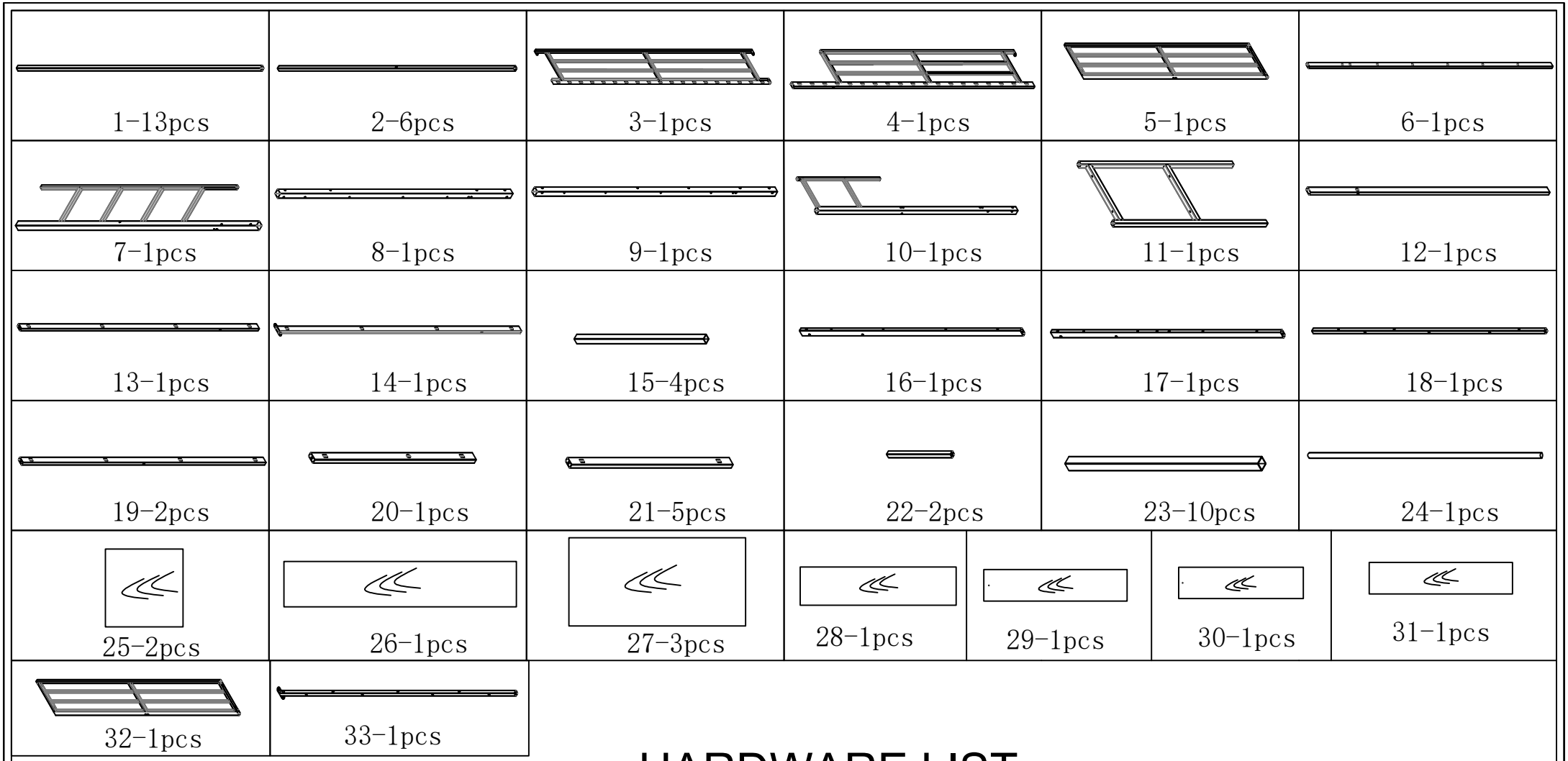

HARDWARE LIST

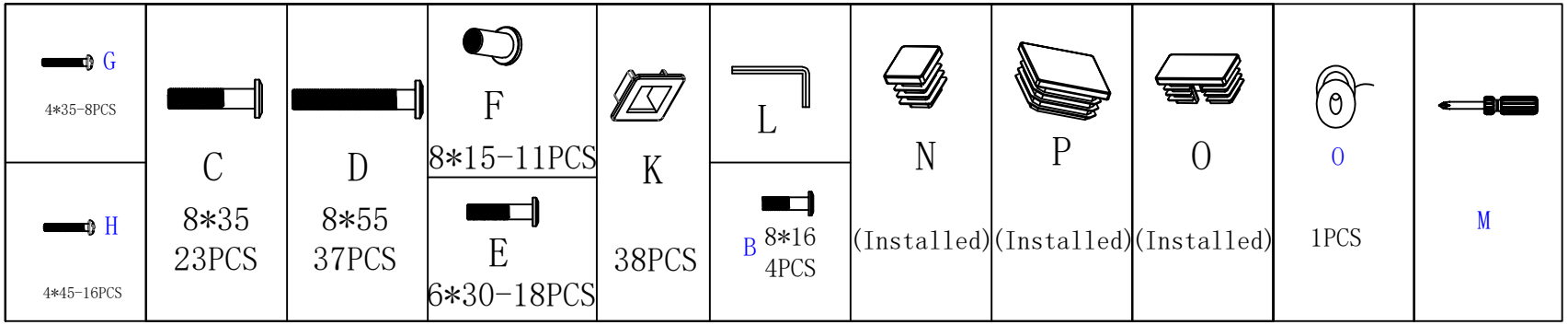

Step 1: Use hardware L,F,C,B and D to connect #32 #8 #9#33 #19 and #21 together.

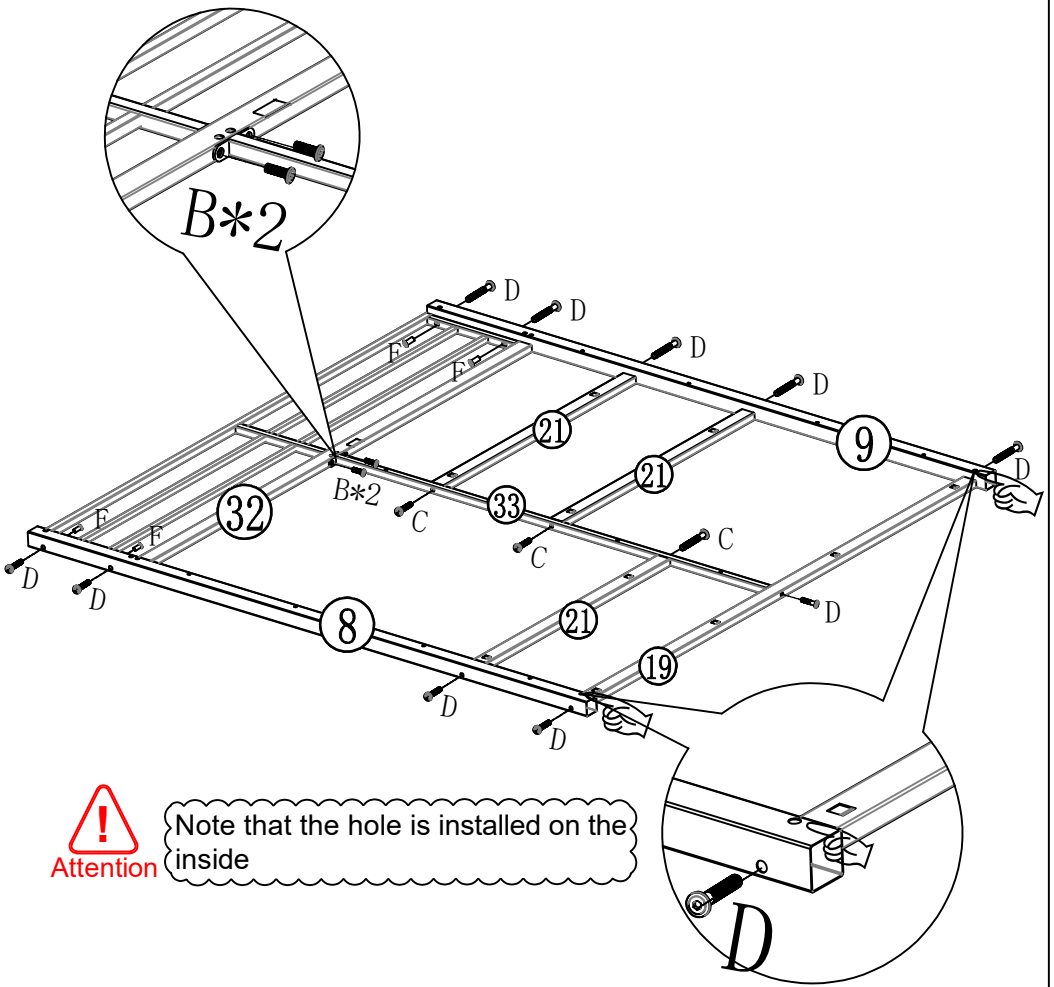

Step 2: Use hardware C,D,H,G,M and L to connect #16,#17#19#28#22 and #23 together.

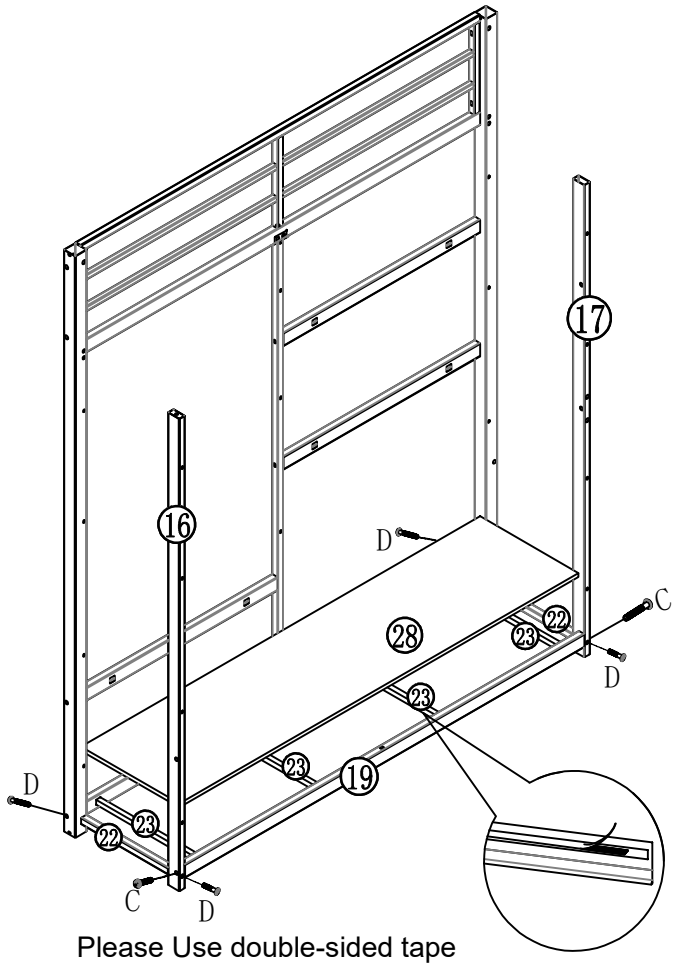

32-1pcs	8-1pcs	9-1pcs	D 8*55-10PCS	F 8*15-4PCS	B 8*15-2PCS	16-1pcs	28-1pcs	22-2pcs	C 8*35 2PCS
19-1pcs	33-1pcs	21-3pcs	C 8*35-3PCS	L		17-1pcs	19-1pcs	23-4pcs	D 8*55 4PCS
									L

Step 3: Use hardware H and M to connect #29 and #31 together.

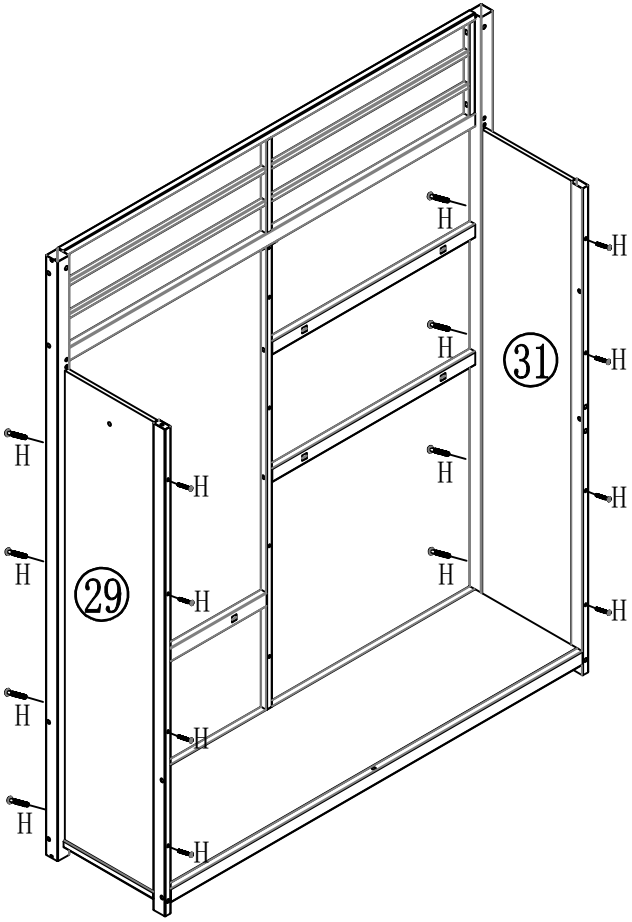

29-1pcs	31-1pcs	H 4*50-16PCS	M

Step 4: Use hardware H,D and M to connect #18 and #30 together.

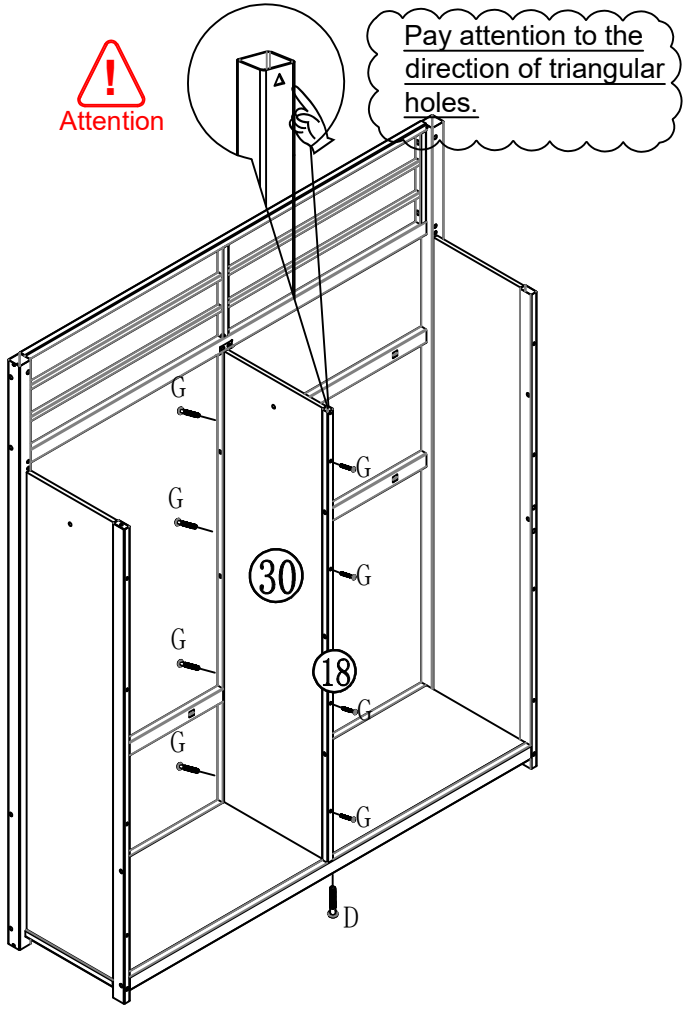

30-1pcs	18-1pcs	G 4*35-8PCS	M	D 8*55-1PCS

Step 5: Use hardware C,and L to connect #24 #27 #23 #20 and #21 together.

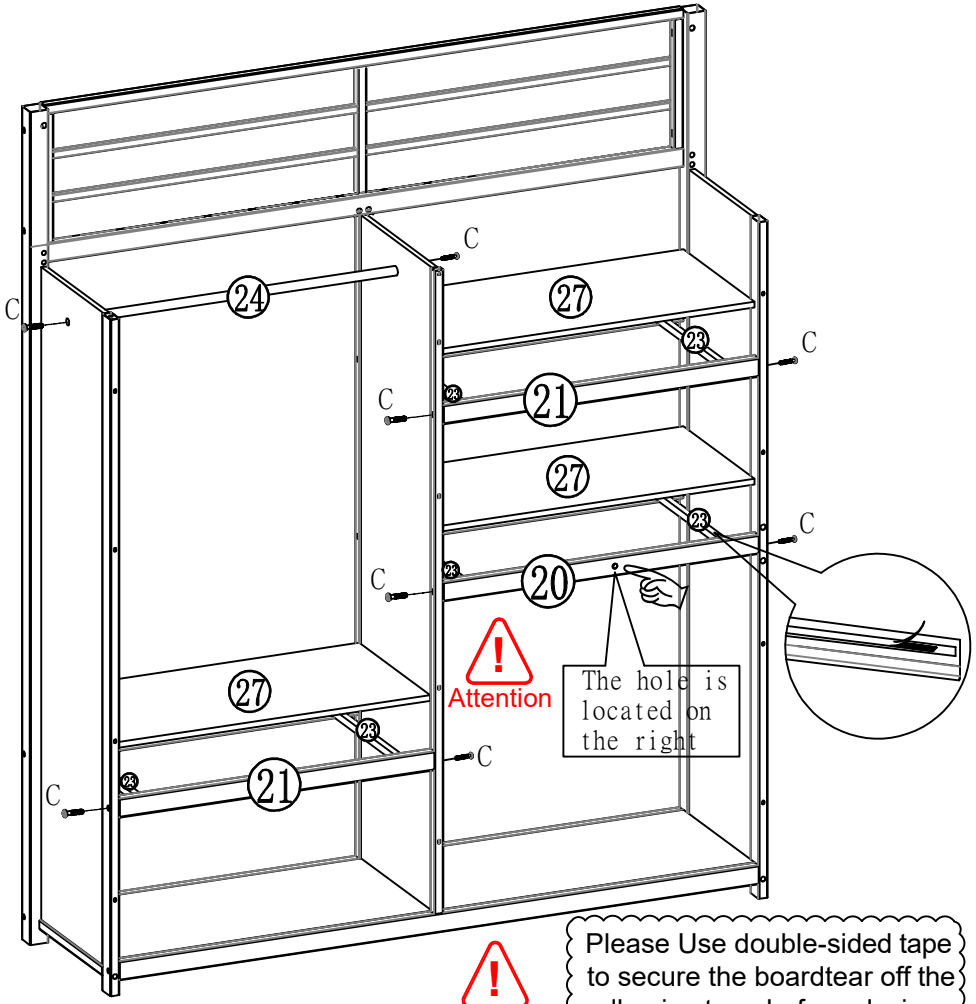

Attention

Please Use double-sided tape to secure the boardtear off the adhesive tape before placing the board.

Step 6: Install part #K to parts #3 and #4 together.

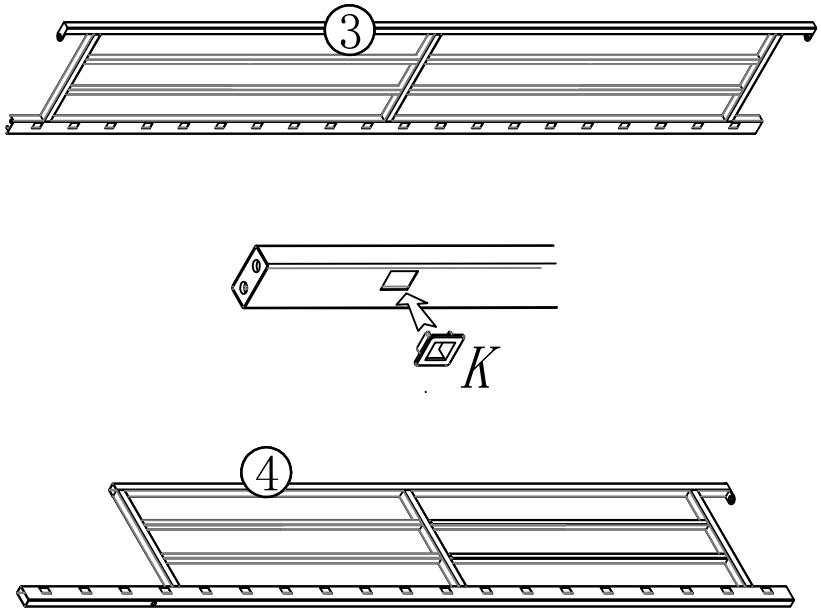

24-1pcs	21-2pcs	20-1pcs	23-6pcs	27-3pcs	C 8*35 -8PCS	L	3-1pcs	4-1pcs	K*38

Step 7: Use hardware C,D,F,B,and L to connect #3 #10 and #14 together.

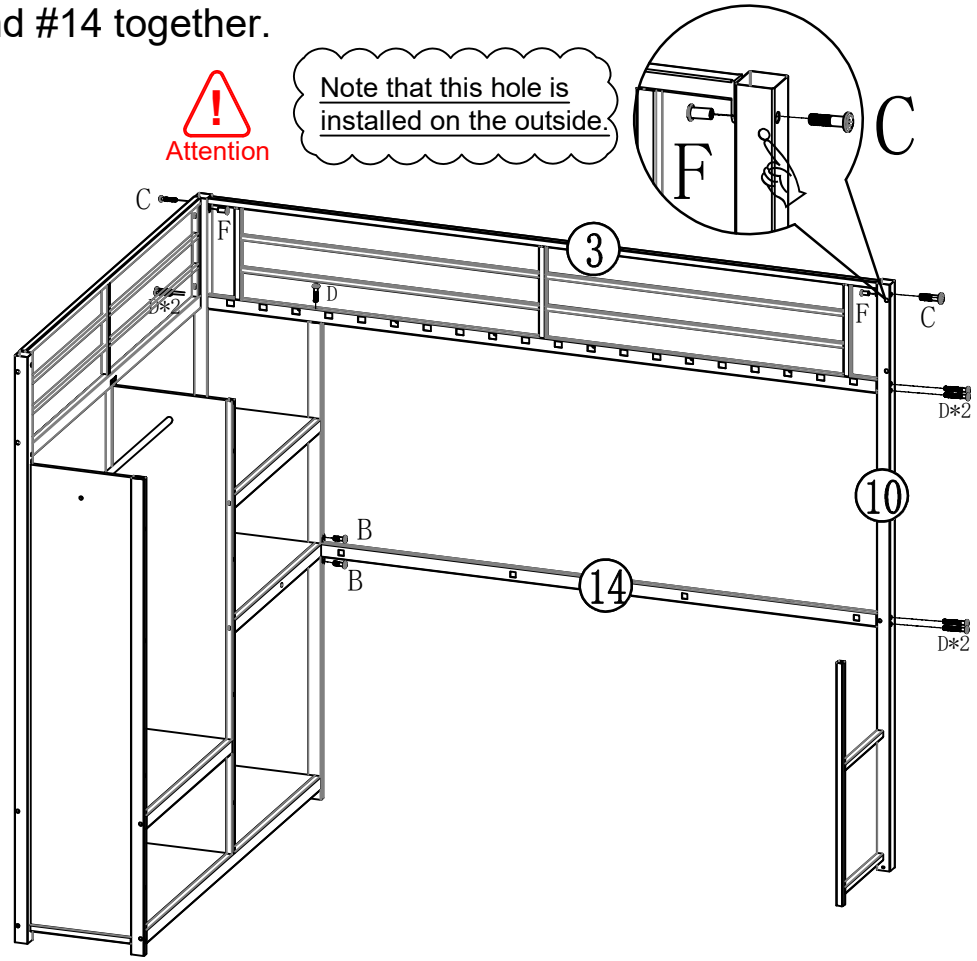

3-1pcs	10-1pcs	14-1pcs	B 8*15-2PCS D 8*55-7PCS	C 8*35-2PCS F 8*15-2PCS	L

Page 11

Step 8: Use hardware C,D,F,and L to connect #5 #6 # 7to the previously installed components.

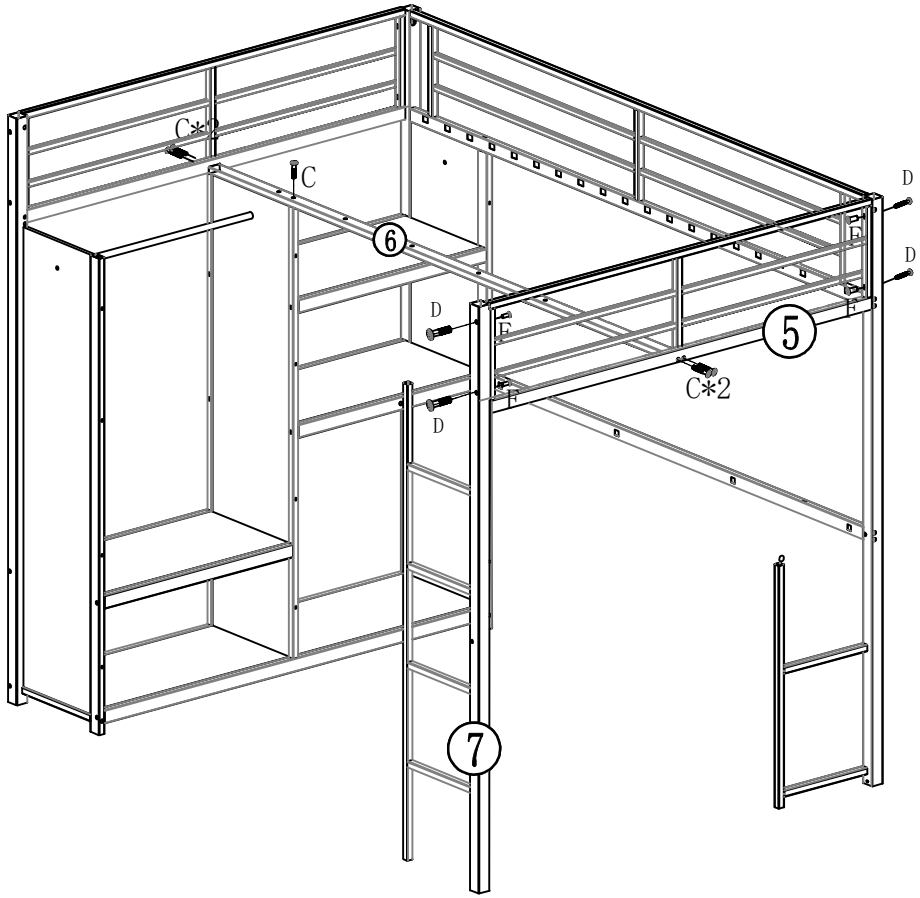

6-1pcs	5-1pcs	7-1pcs	D 8*55-4PCS C 8*35-5PCS	F 8*15-4PCS L

Page 12

Step 9: Use hardware C,D,and L to connect #13 #15#12 #26 #11and #25 together.

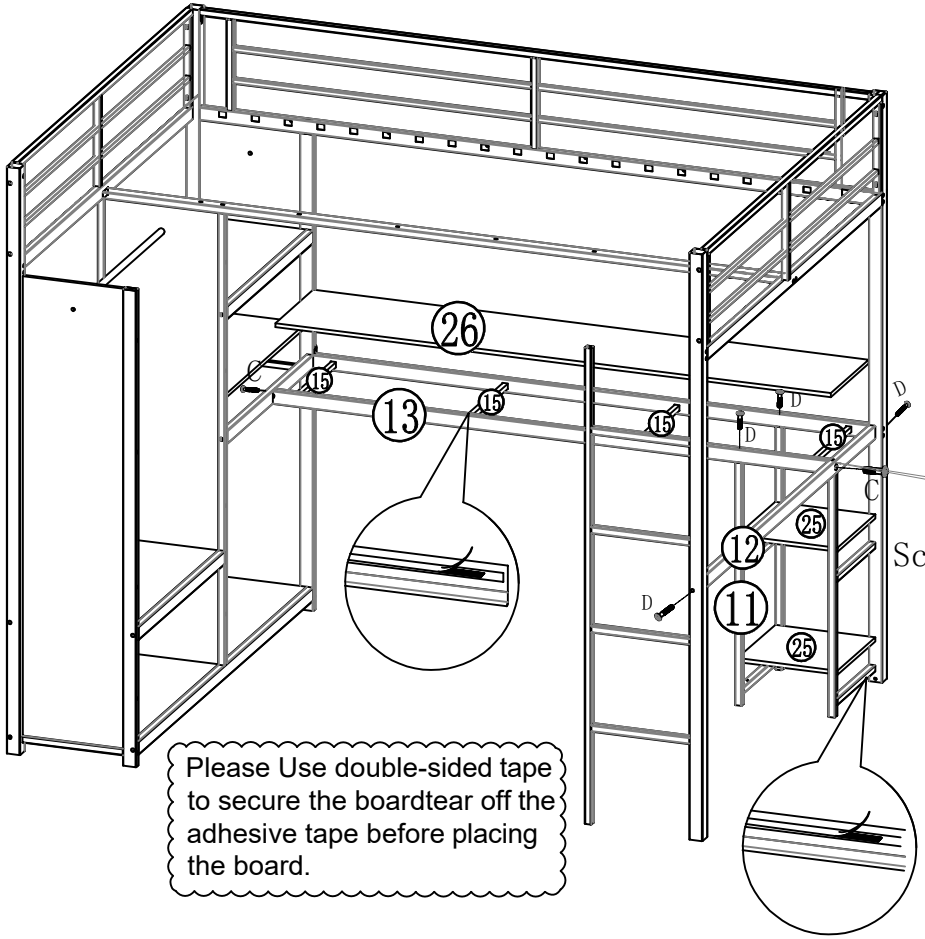

Screw C first

Attention

Step 10: Use hardware ,D,E,and L to connect #2 to the previously installed components.

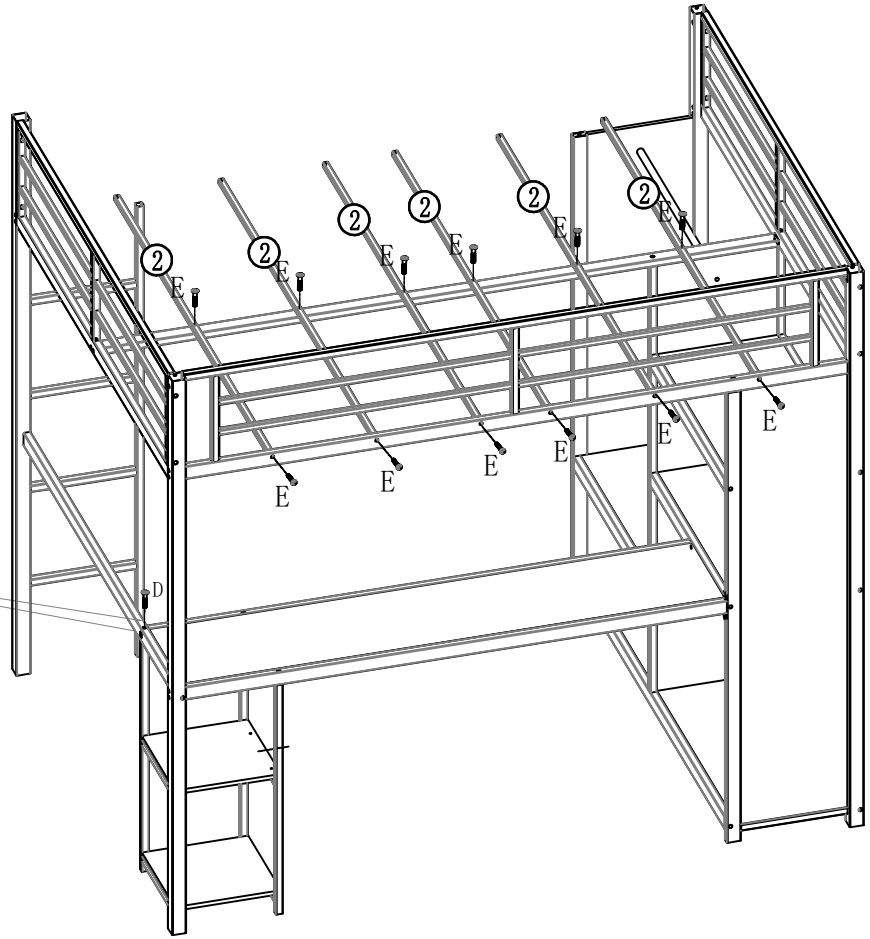

13-1pcs	26-1pcs	11-1pcs	D 8*55-4PCS	L
15-4pcs	25-2pcs	12-1pcs	C 8*35-2PCS	

2-6pcs	D 8*55-1PCS	E 6*30-12PCS	L

Step 11: Connect #1 to the previously installed components.

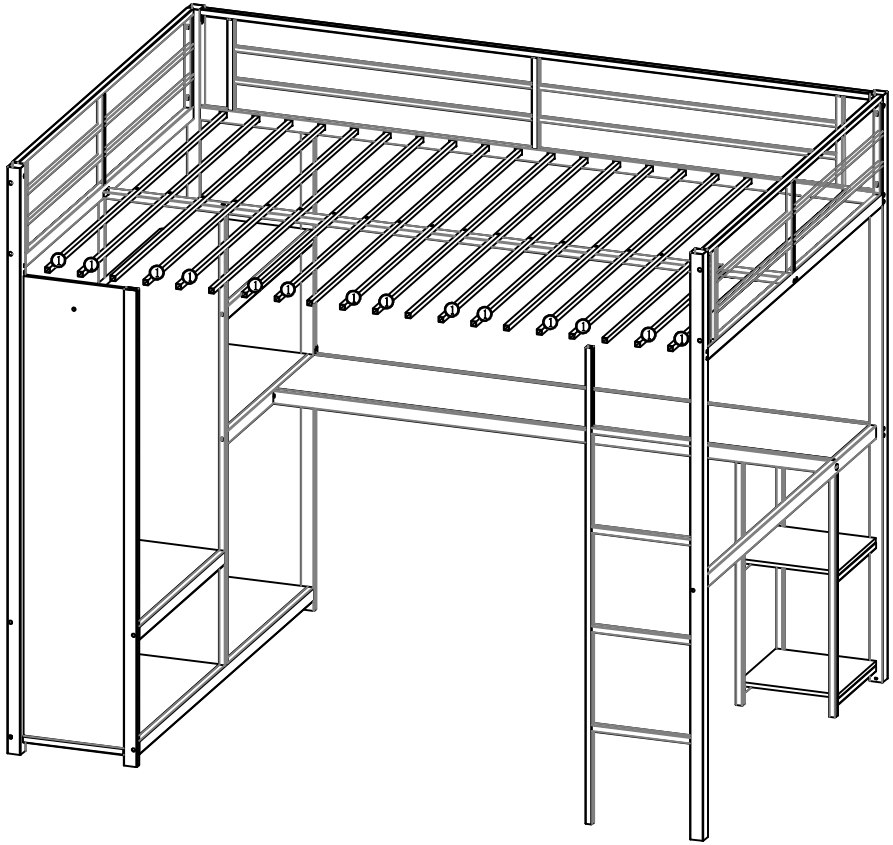

1-13pcs

Step12: Use hardware C,D,E,F,and L to connect #4 to the previously installed components.

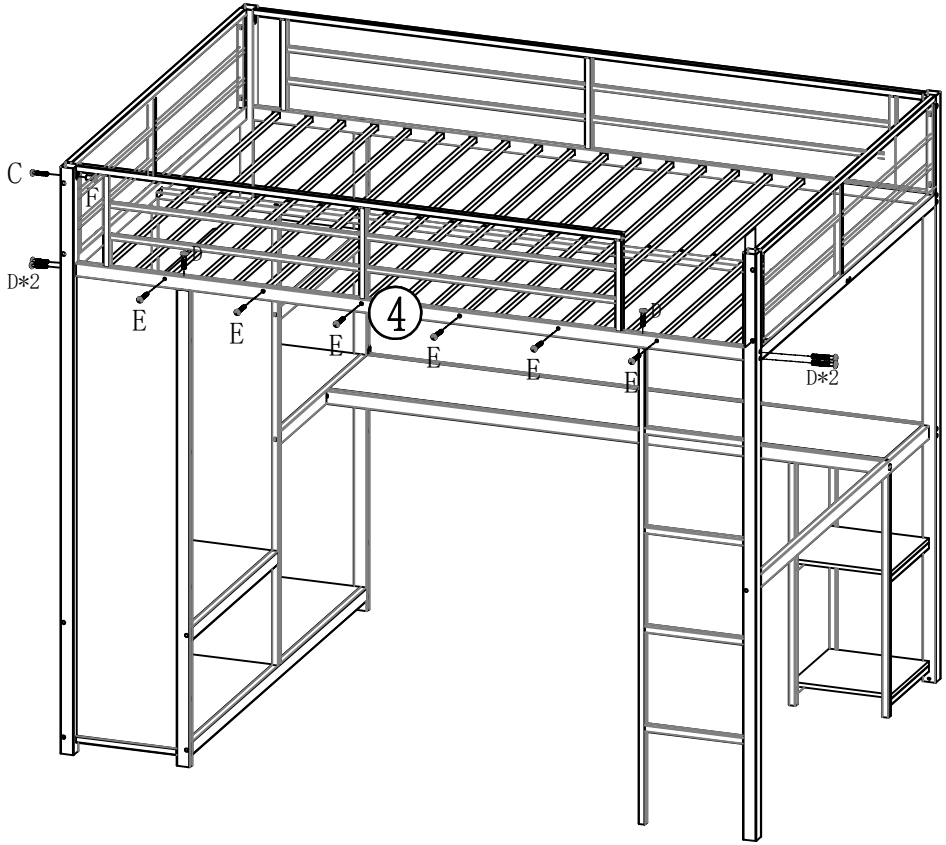

4-1pcs

D
8*55-6PCS

E
6*30-6PCS

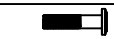

C
8*35-1PCS

F
8*15-1PCS

L

Completed loft bed

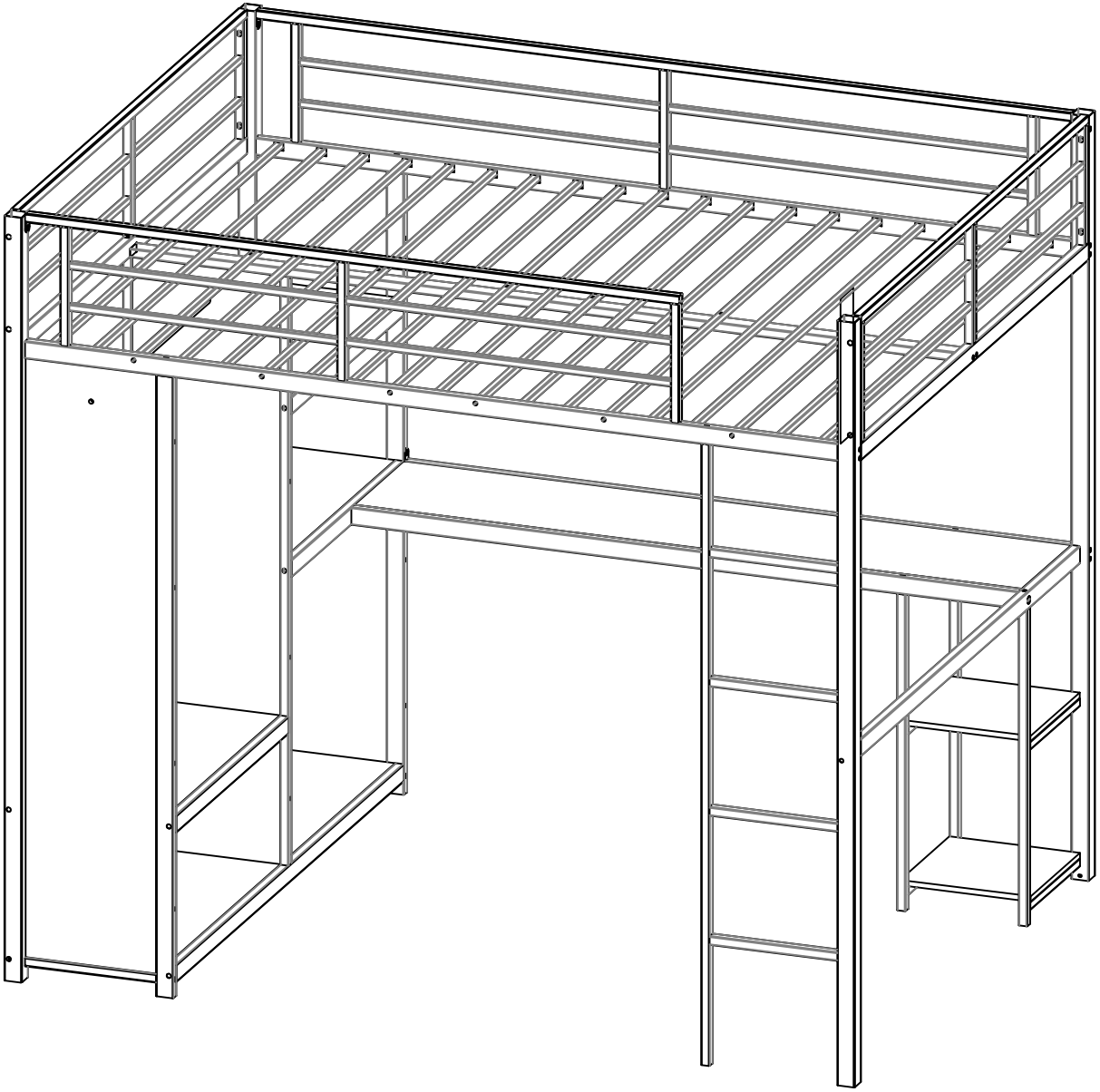

Attention *Please tighten all screws before use, thank you.*