TECHNI MOBILI

www.technimobili.com

SIT TO STAND MOBILE LAPTOP STAND

MODEL RTA-B008

ASSEMBLY INSTRUCTIONS

REV.OL-2-8211-0724

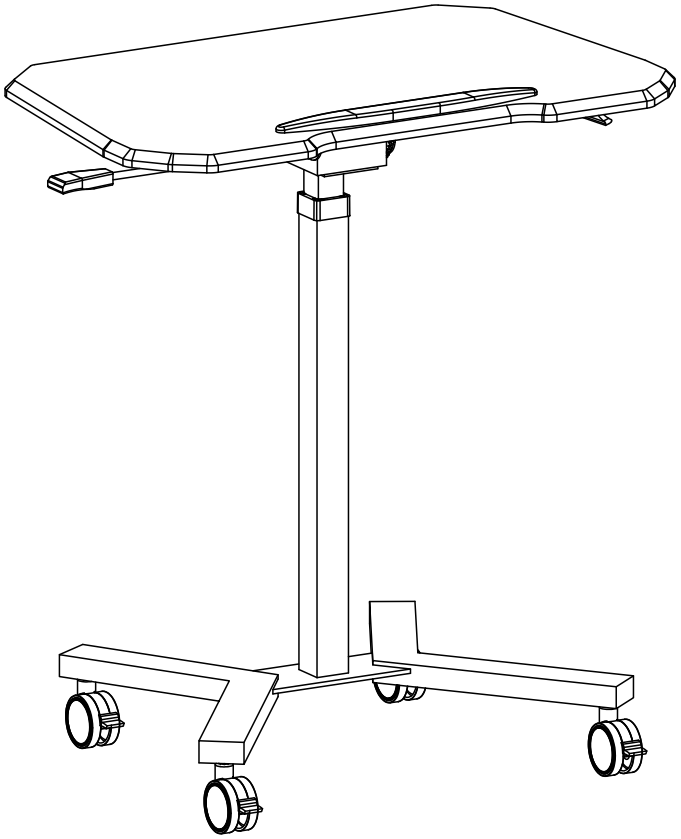

Thank you for purchasing our product

RTA PRODUCTS LLC

RTA-B008

Do a quick inventory of all the parts and hardware listed below.

For Support, assembly questions & Replacement Parts within the 48 *Contiguous* United States:

Please email us at:
support@rtaproducts.com

Replacement Parts for International Customers & **AK-HI-PR** orders:
RTA Products will replace the part free of charge, while **the customer is responsible for shipping costs plus any International local taxes or duties**.

MAIN PARTS LIST

#1 Gas Lift

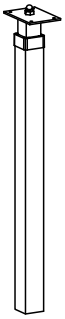

#2 Base

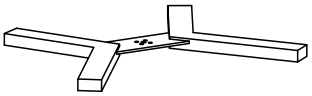

#3 Support plate

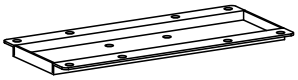

#4 Mechanism

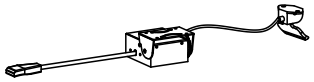

#5 Tabletop

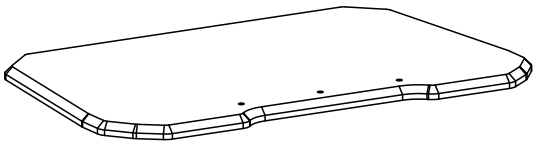

#6 Edge stopper



#7 Locking casters

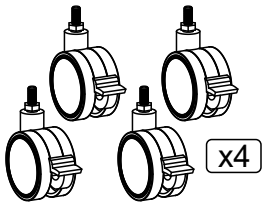

MAIN PARTS LAYOUT (For reference)

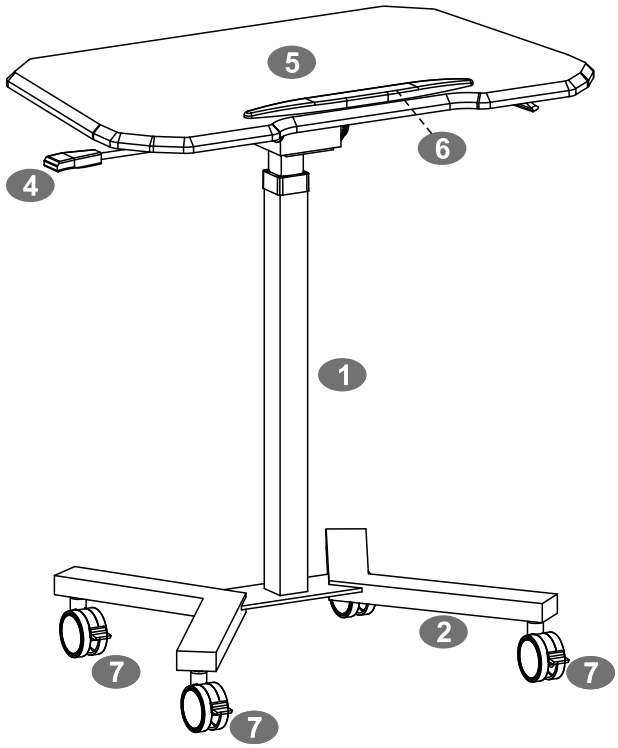

HARDWARE LIST

PART	QTY	SIZE / DESCRIPTION	ITEM
A	14	M6x12	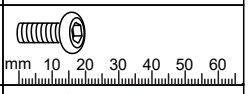
B	4	M6x8	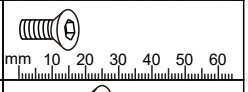
C	4	M6x20	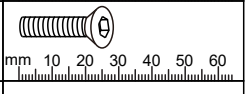
D	3	5x16mm	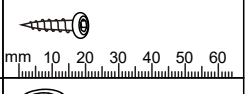
E	4	Ø14, Ø9, 3mm	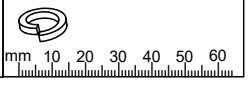

TOOLS INCLUDED

Allen wrench	
Spanner wrench	

BEFORE YOU START THE ASSEMBLY, PLEASE READ THE FOLLOWING TIPS AND WARNINGS.

- Do not discard this manual or any of the packaging material until the unit is completely assembled.
- Please read the assembly instructions throughly and follow step by step.



- The assembly might require of 2 persons for certain steps. Before you start the instalation, make sure there is someone else nearby to help you.

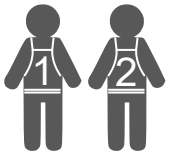

- Make sure you understand which hardware will be used on each step.
- Do not overtighten the screws to avoid stripping, breaking or getting stuck inside the part that is being used.

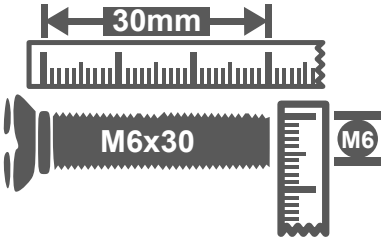



CORRECT SIZE | TOO SHORT! | TOO LONG! | DO NOT OVERTIGHTEN!

- If the hole seems to small for the screw, make sure you are using the correct size of screw and/or that you are installing it in the correct hole.



- Sometimes on the wood panels the laminate or material might be covering the hole partially or entirely, if there is no visible hole or if it looks too small, pass and press the tip of your finger over the area to feel its indentation, and carefully pierce the laminate to uncover the hole underneath.

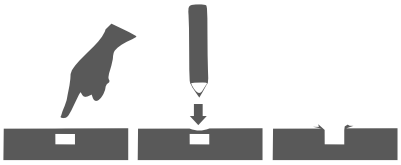

- Please be kind to our planet, when done with the assembly, recycle any of the packaging materials that is accepted by your city or recycling service.



- After finishing with the assembly, you can use rubbing alcohol to erase or remove the visible part numbers printed or labeled on the pieces.

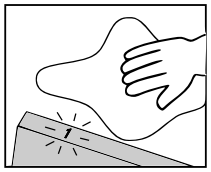

ASSEMBLY STEPS

WE RECOMMEND TO PLACE THE PIECES OVER BLANKETS OR TABLECLOTHS TO PROTECT THEIR FINISH DURING ASSEMBLY.

STEP 1

Hardware

B	M6x8	4 Pcs

Tools (included)



Attach the support plate #3 to the mechanism #4 with screws B.

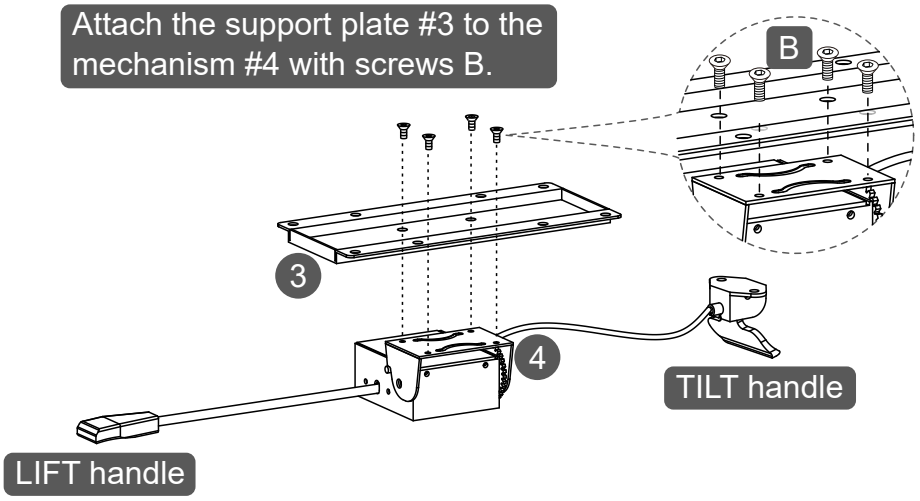

STEP 2

Hardware

A	M6x12	10 Pcs

Tools (included)

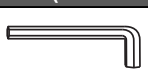

Assemble the mechanism #4 to the tabletop #5 with screws A.

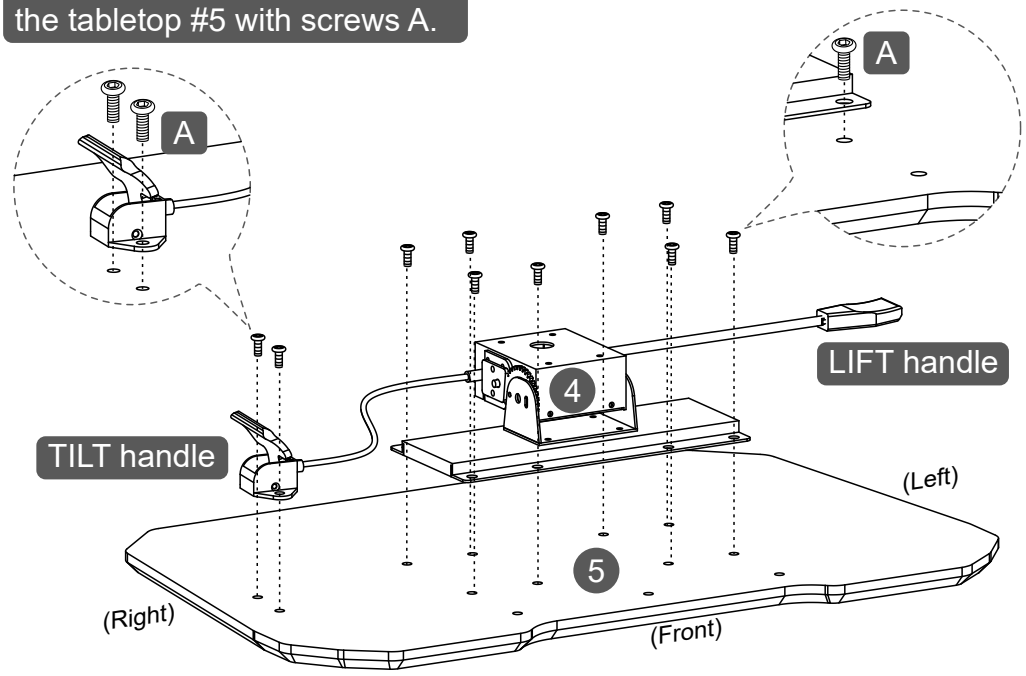

NOTE: When the unit is fully assembled, the LIFT handle will be located on the LEFT side, and the TILT handle on the RIGHT side.

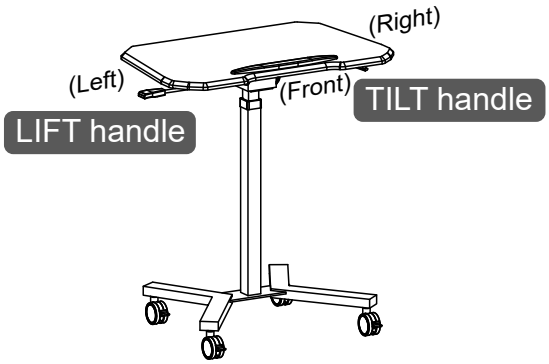

STEP 3

Hardware

A	M6x12	4 Pcs

Tools (included)



FIRST: Remove the protective cap from the bottom of the gas lift #1.

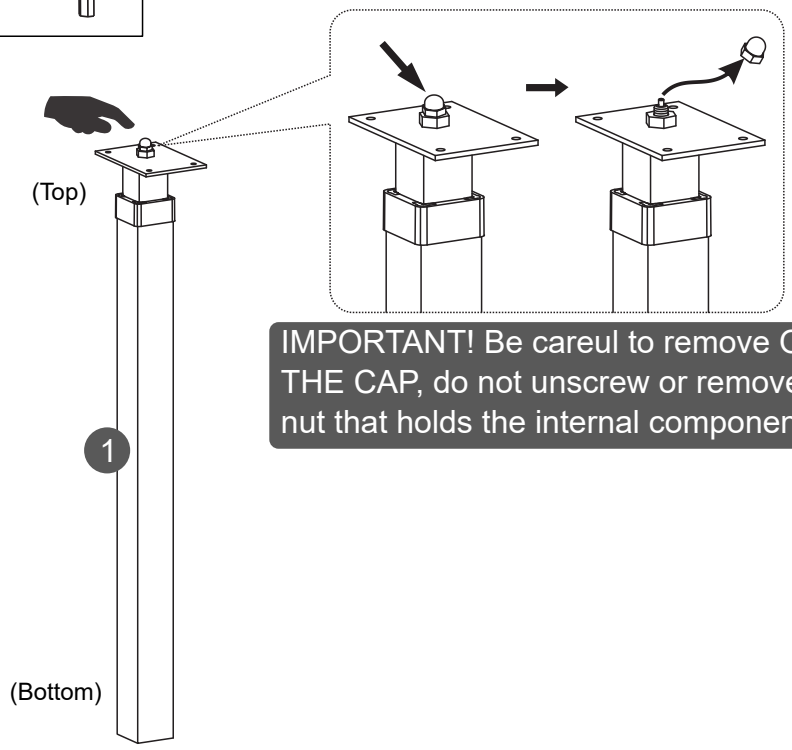

IMPORTANT! Be careul to remove ONLY THE CAP, do not unscrew or remove the nut that holds the internal components!

THEN: assemble the gas lift #1 to the mechanism #4 with screws A.

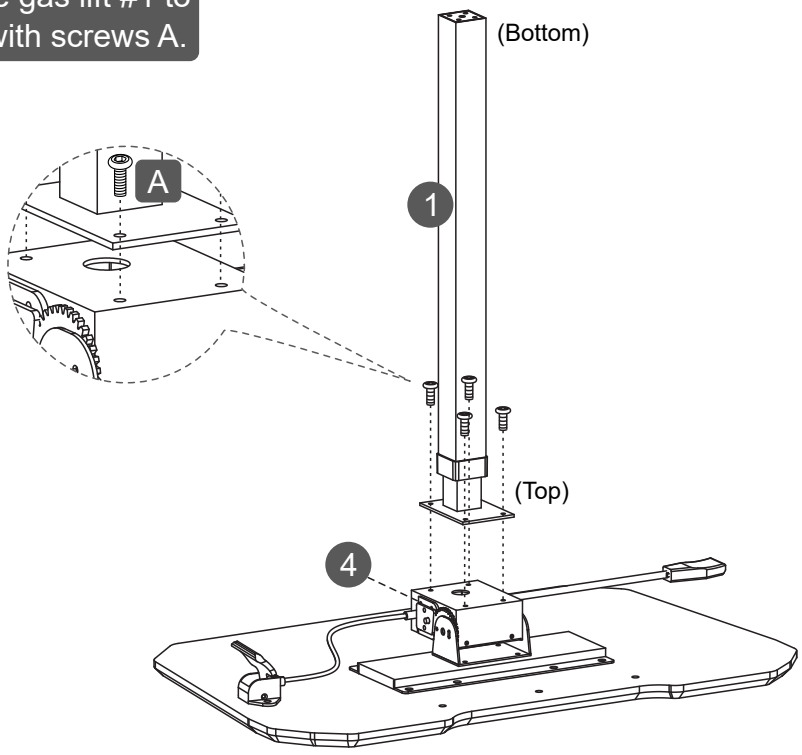

STEP 4		
Hardware		
C	M6x20	4 Pcs
E	Ø14, Ø9	4 Pcs
Tools (included)		

FIRST: Assemble the base #2 to the gas lift #1 with screws C and O-Rings E

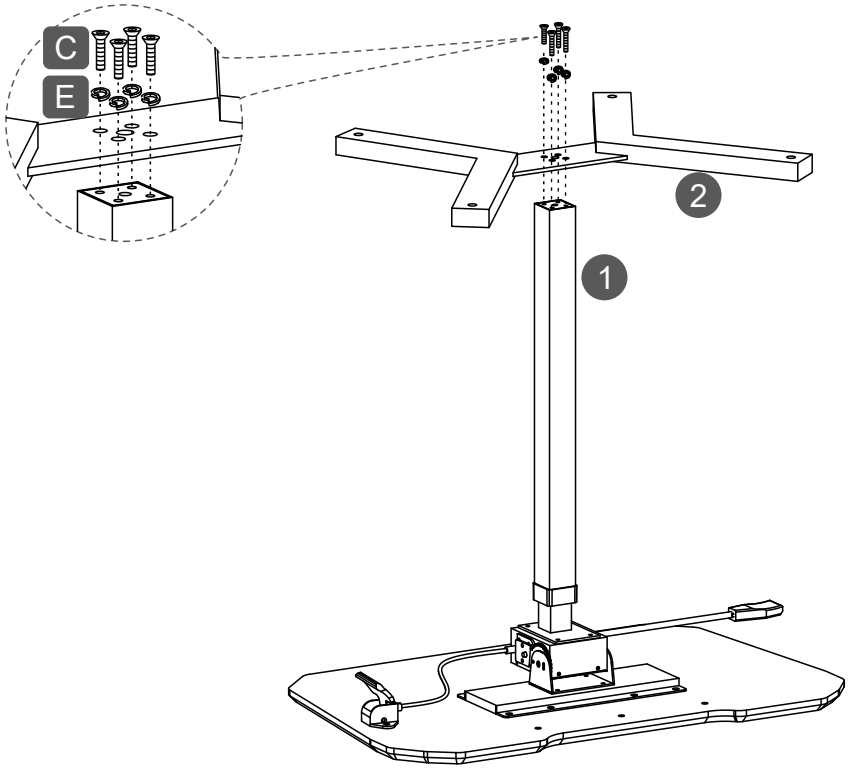

THEN: Use the Spanner to attach the casters #7 to the base #2.

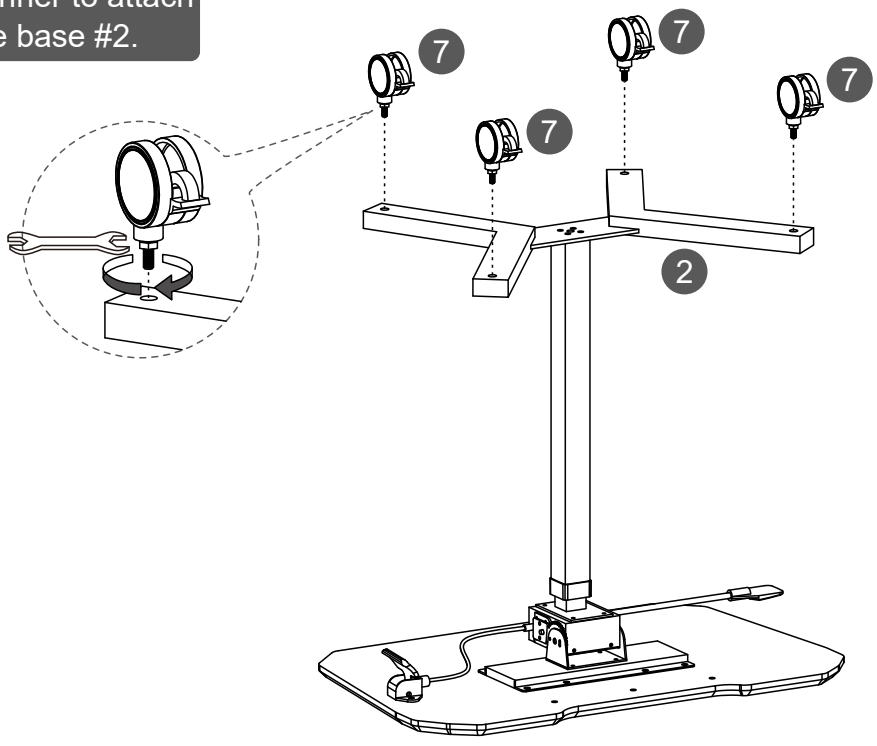

STEP 5

Hardware

D	5x16mm	3 Pcs

Tools (included)



Assemble the edge stopper #6 to the tabletop #5 with screws D.

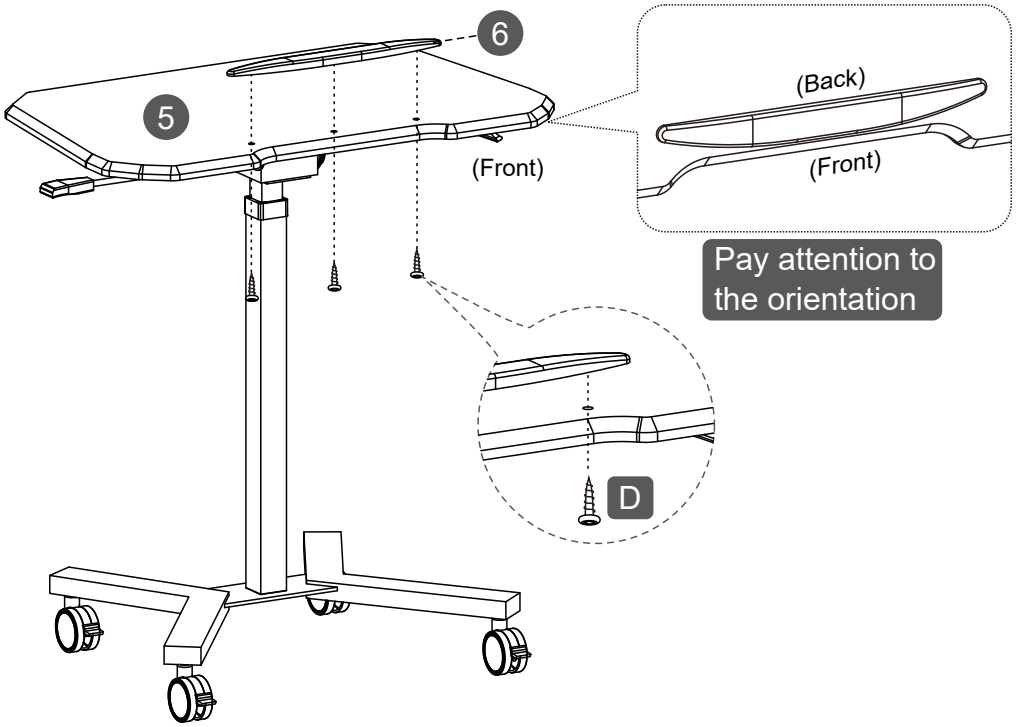

Pay attention to the orientation

FUNCTIONS

LIFT

Pull the LEFT handle UP to lift. To bring down, also pull it UP and at the same time push DOWN on the tabletop applying force.

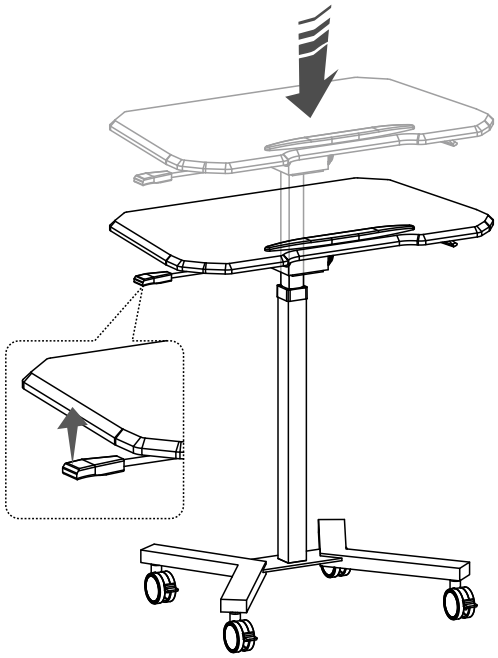

TILT

Pull the RIGHT handle UP and carefully tilt forward. To bring back to horizontal position, pull the same handle UP.

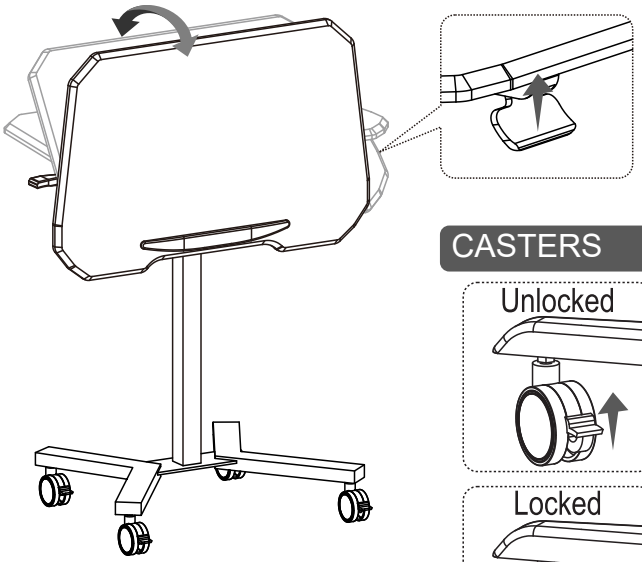

CASTERS

WARNINGS

Not paying attention to the following warnings could result in accidental damages or injuries.

WEIGHT LIMIT - DO NOT EXCEED

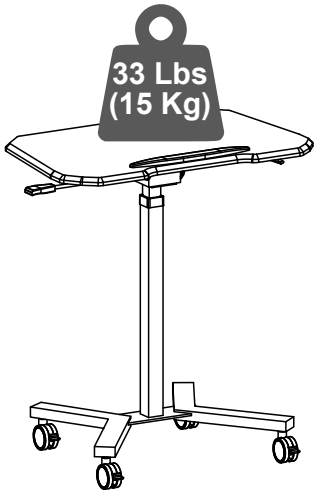

Do not stand up on the base legs

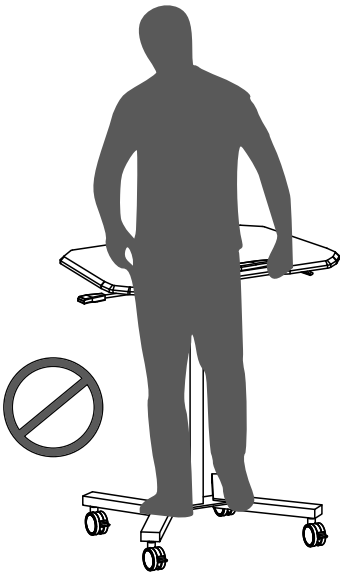

Unlock the casters before rolling the unit and use precautions and good judgement with your devices when rolling, adjusting the height, or tilting the tabletop at certain angles.

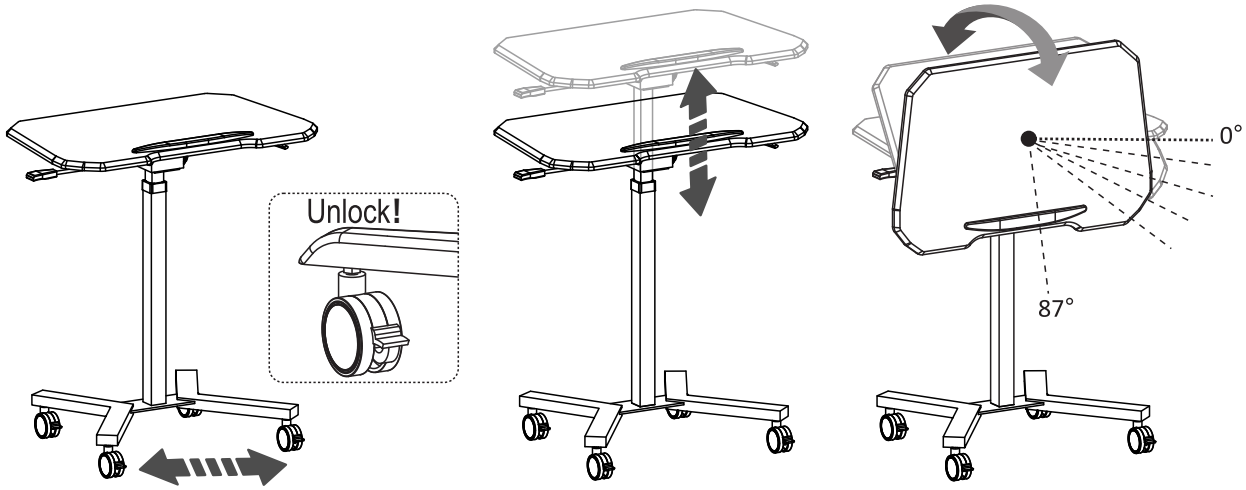

CARE AND MAINTENANCE

Clean with a cloth lightly damped in a solution of mild soap and water.



Do not use solvents or abrasive materials.



Do not expose to direct sunlight or extreme enviromental conditions.

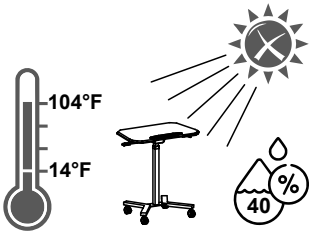

Inspect and re-tighten loose screws on the unit every 4 months.



TECHNI MOBILI WARRANTY



DESKS/LAPTOP CARTS/FILE CABINETS: LIMITED 5-YEAR WARRANTY

RTA Products, LLC warrants to the Original Purchaser who acquired a new product from RTA Products or its authorized resellers that this product will be free from defects in its workmanship and materials, under normal use and service conditions, as described herein. "Defects" as used in this warranty, is defined as any imperfections that impair the use of the furniture or product. RTA Products LLC will replace any defective part, at its discretion, and without charge to the original purchaser other than the freight from the end consumer to RTA Products.

Replacement parts can only be supplied if parts are available. Items out of production may be unavailable. This warranty will be effective for the applicable time period beginning the date of purchase on your original sales receipt. RTA product's obligation under this warranty is limited to repairing or replacing products or parts as provided herein. This product has been designed for and is intended for office and home-office use only. This warranty is Original Purchaser's sole remedy for product defects, and this warranty does not extend to any product, or damage to any product, caused by or attributed to abuse or misuse, products used for commercial or rental purposes, use modifications of, or attachments to the product, and products or parts not used, maintained, or extended hereunder is in lieu of any and all other warranties, express or implied, including without limitations any implied warranty or merchantability or of fitness for a particular purpose. Please note, all desks made with PVC Laminate surface should not be exposed to direct sunlight, as it may damage the material. Damage of this nature is not covered under this warranty.

RTA Products will not be responsible for indirect, special, incidental or consequential damages. This warranty is limited to merchandise purchased in the Continental United States, excludes AK, HI and PR. Some States do not allow the exclusion or limitation of incidental or consequential damages, so the above limitations or exclusions may not apply to you. This warranty gives you specific legal rights. You may also have other rights that may vary from state to state.

To file a Claim within the 48 contiguous United States:
Email us to warranty@rtaproducts.com to explain the defect and provide your name, address, phone number, model number of our product, date and place, and proof of purchase. Please provide pictures of the damage or defect.If we determine that a replacement will remedy the situation, and in order to determine the extent or the cause of the defect, purchaser may be requested to send the part in question at purchaser's expense. Once we receive the part, we will examine it and determine whether the claim is valid (or not), and then proceed to send the replacement. We will ship the replacement at our expense.

Replacement Parts for International Customers & AK-HI-PR orders:
RTA Products will replace the part free of charge, while **the customer is responsible for shipping costs plus any International local taxes or duties.**