Arcade Style
Electronic Dartboard

Arachnid®
The Originator of Electronic Dart Games!

www.escaladesports.com
TO ORDER PARTS
Visit our website before returning to store

Please have your model number when inquiring about parts.

When contacting Escalade Sports please provide your model number, date code (if applicable), and part number if requesting a replacement part. These numbers are located on the product, packaging, and in this owner manual.

Your Model Number: **E800FS1010**

Date Code: **CPSIA#2-E800FS1010- -MW**

Purchase Date: _____

PLEASE RETAIN THIS INSTRUCTION MANUAL FOR FUTURE REFERENCE

817 Maxwell Ave. Evansville, IN 47711 / www.escaladesports.com

IMPORTANT NOTES

1. Make sure you have all the necessary parts before beginning each assembly step.
2. Perform the assembly steps exactly as written to avoid errors.
3. Refer to diagrams to aid in the assembly process.
4. Keep your original receipt and instruction manuals for the cabinet and electronic dartboard for warranty purposes.
5. This is a 2 adult assembly

Tools Needed

- Phillips Screwdriver

PREPARATIONS

1. Find an open area on the floor to perform the assembly, in close proximity to where you plan to put the finished product.
2. Carefully open the box. Do not use a knife as you may scratch the cabinet.
3. Remove the inner box holding the electronic dartboard and put it to the side until you are ready to install it into the cabinet.
4. Take the cabinet and hardware parts out of the box and make sure all of the parts are accounted for.
5. Begin assembly.

WARNING!

TIP OVER HAZARD
Do NOT lean on or climb on this cabinet.
Hand pressure must be applied to the dartboard while removing darts from the dartboard.
A Safety L-Bracket / Screws / and installation Instructions are included and must be installed correctly in order to prevent this tip over hazard.

STOP

PLEASE KEEP YOUR INSTRUCTIONS!

- Your Model number is necessary should you need to contact us.
- Please read through this instruction book to familiarize yourself with all the parts and assembly steps.
- Refer to the Parts Identifier and verify that all parts have been included.
- For questions that may arise or for missing parts, **PLEASE CONTACT US BEFORE RETURNING THE PRODUCT TO THE STORE**

CONTACT INFORMATION:

Hours: Mon. - Fri., 9:00 am to 5: 00 pm EST
Replacement Parts: order online at www.escaladesports.com
Technical Support: customerservice@escaladesports.com / 1-800-526-0451

All Rights Reserved
©2014 Escalade Sports

Hardware Identifier
(To Scale)

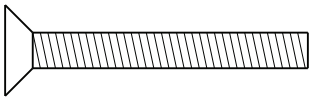

H1 - 40 x 5mm
Phillips Flat Head Bolt (24)

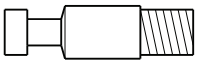

H2 - 25 x 6mm
Panel Bolt (4)

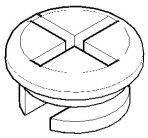

(Not to Scale)
H3 - Panel Bolt Lock (4)

H4 - 20 x 6mm
Wood Dowel Pin (16)

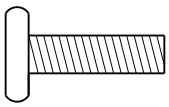

H5 - 18 x 6mm
Allen Head Bolt (2)

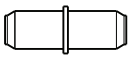

H7 - 16 x 5mm
Pivot Pin (2)

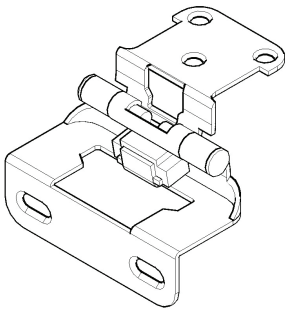

(Not to Scale)
H8 - Door Hinge (3)

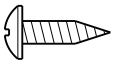

H9 - 12 x 3.5mm
Phillips Round Head Screw (56)

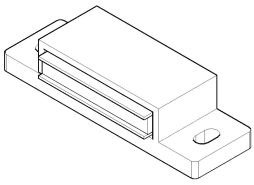

(Not to Scale)
H10 - Door Magnet (1)

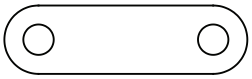

H11 - (Not to Scale)
Door Magnet Attachment (1)

H12 - 10 x 3.5mm
Phillips Flat Head Screw (5)

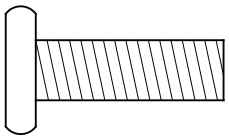

H13 - 25 x 8mm
Allen Head Bolt (4)

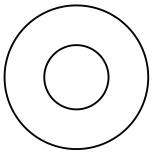

H14 - 8.5 x 19mm
Flat Washer (4)

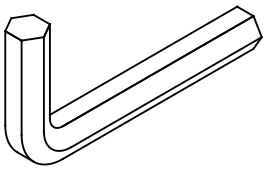

(Not to Scale)
Allen Wrench (1)

All Rights Reserved
©2014 Escalade Sports

Parts Identifier
(Not to Scale)

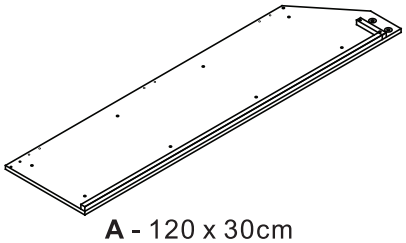

A - 120 x 30cm
Lower Left Side Panel (1)

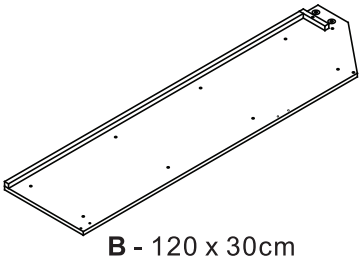

B - 120 x 30cm
Lower Right Side Panel (1)

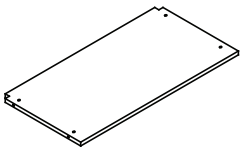

C - 57.5 x 29.5cm
Top & Bottom Shelves (2)

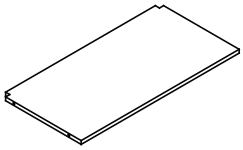

D - 57.5 x 29cm
Middle Shelves (2)

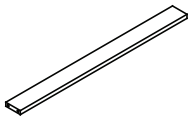

E - 57.5 x 5cm
Base Cross Panel (1)

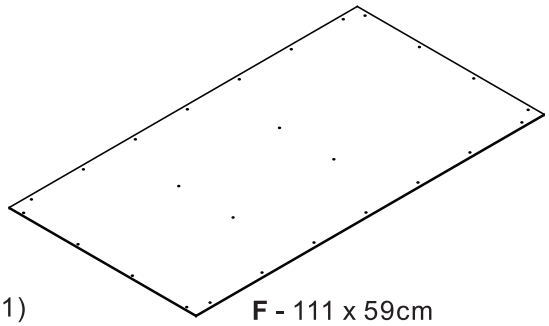

F - 111 x 59cm
Lower Back Cover (1)

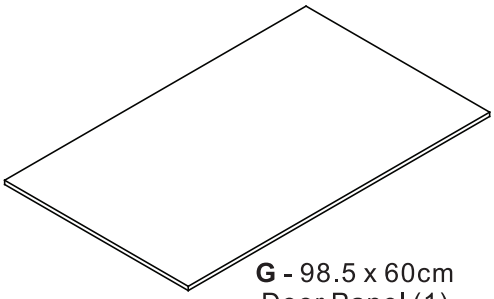

G - 98.5 x 60cm
Door Panel (1)

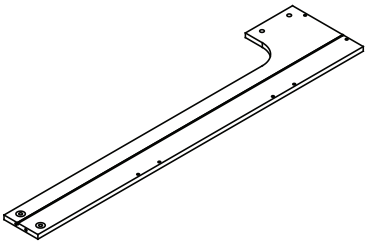

J - 98 x 21.5cm
Upper Left Side Panel (1)

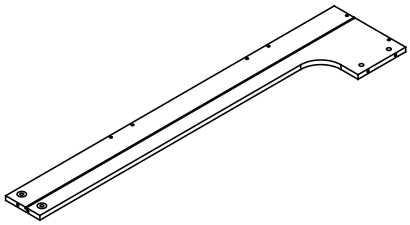

K - 98 x 21.5cm
Upper Right Side Panel (1)

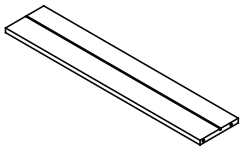

L - 57.5 x 11.5cm
Upper Section Bottom Panel (1)

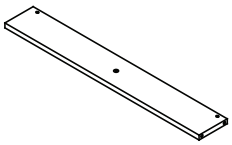

M - 55 x 8cm
Dartboard Anchor Panel (2)

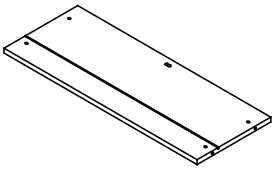

N - 55 x 21cm
Upper Panel (1)

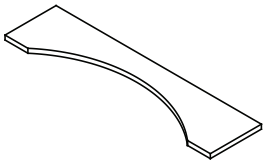

P - 58 x 14.5cm
Upper Section
Arched Front Panel (1)

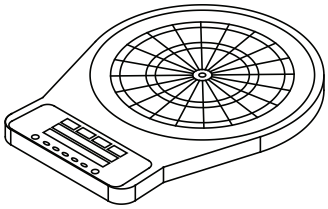

Q - Dartboard (1)

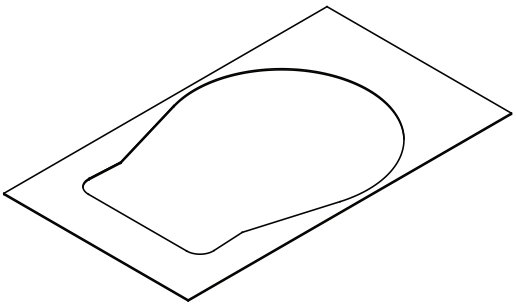

R - 97.5 x 55.5cm
Front Baffle Panel (1)

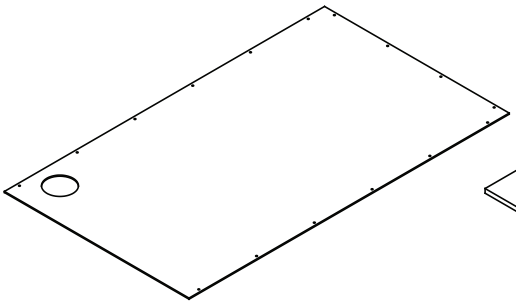

S - 98 x 56.5cm
Upper Back Panel (1)

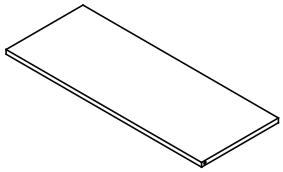

T - 57 x 22.5cm
Tilt-Down Door Panel (1)

All Rights Reserved
©2014 Escalade Sports

1. Attach Parts **N** and **L** to Part **J** using Phillips Flat Head Bolts (**H1**). See **Figure 1**. Factory Installed Inserts on Part **N** and Part **J** must be aligned to screw holes for proper attachment. See **Figure 1A**. Make sure grooves on all parts are aligned. Tighten, but do Not over tighten or strip out **H1** Bolts.

PARTS REQUIRED:
H1 Phillips Flat Head Bolt - 4 pcs
J Upper Left Side Panel - 1 pc
N Upper Panel - 1 pc
L Upper Section Bottom Panel - 1 pc
Phillips Screwdriver

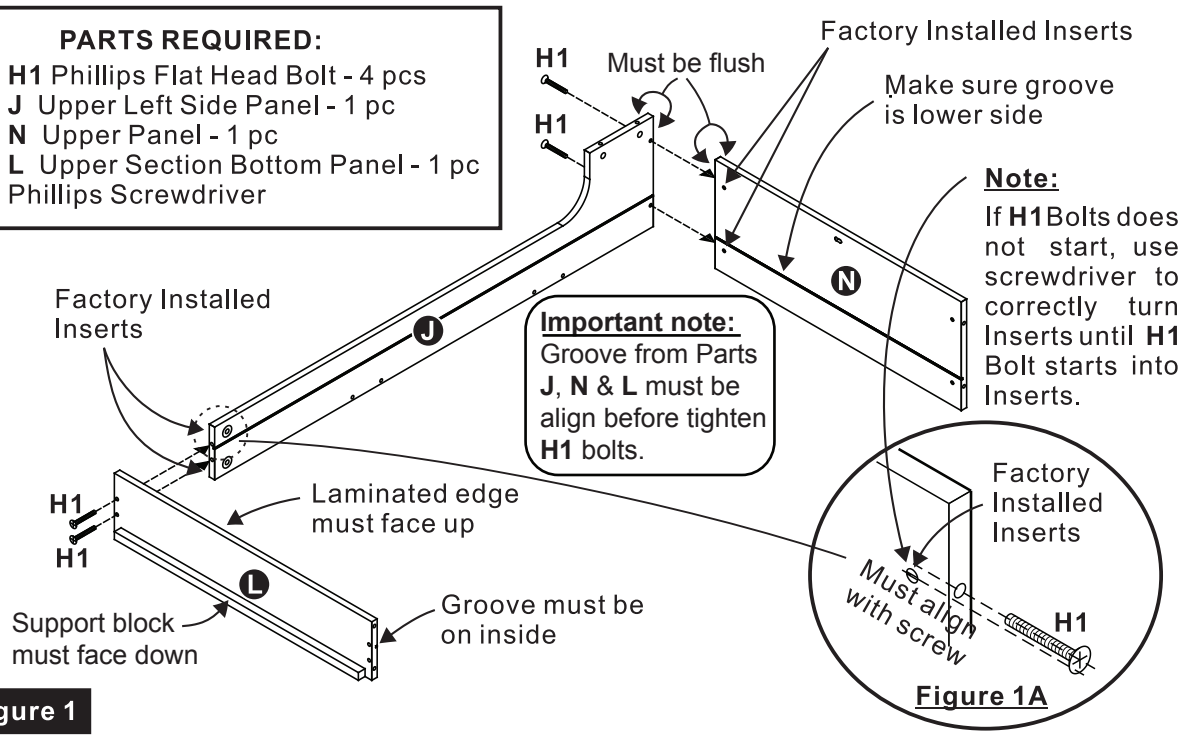

Figure 1

2. Screw Allen Head Bolts (**H5**) into Factory Installed Inserts on Parts **M**. Finger tighten Only.
3. Attach Parts **M** to Part **J** using Phillips Head Bolts (**H1**) and Wood Dowel Pins (**H4**). See **Figure 2**. Tighten, but do Not over tighten or strip out **H1** Bolts.

PARTS REQUIRED:
H1 Phillips Flat Head Bolt - 2 pcs
H4 Wood Dowel Pin - 2 pcs
H5 Allen Head Bolt - 2 pcs
M Dartboard Anchor Panel - 2 pcs
Phillips Screwdriver

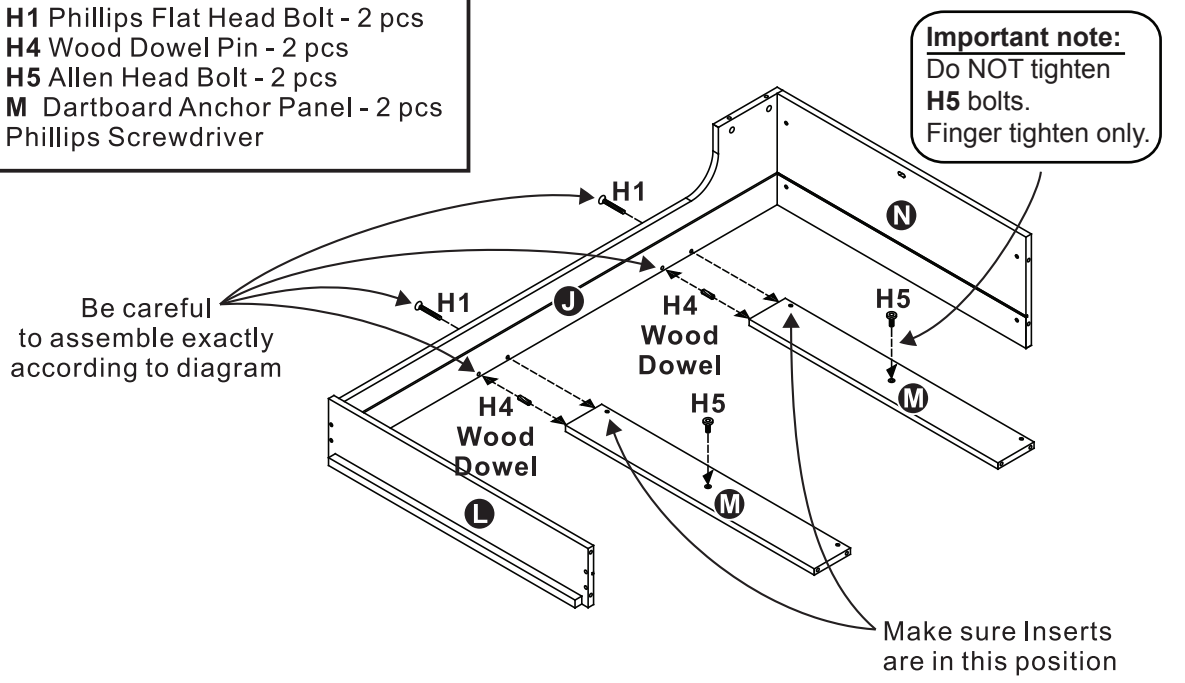

Figure 2

All Rights Reserved
©2014 Escalade Sports

4. **Important Note: This step requires help from another adult.**
   Hang **Dartboard** (**Q**) on Parts **M.**
5. **Important Note: This step requires help from another adult.**
   Slide Part **R** into grooves on Parts **N**, **L** and **J** and over **Dartboard** until board shows through cut out piece.

PARTS REQUIRED:
Q Dartboard - 1 pc
R Front Baffle Panel - 1 pc

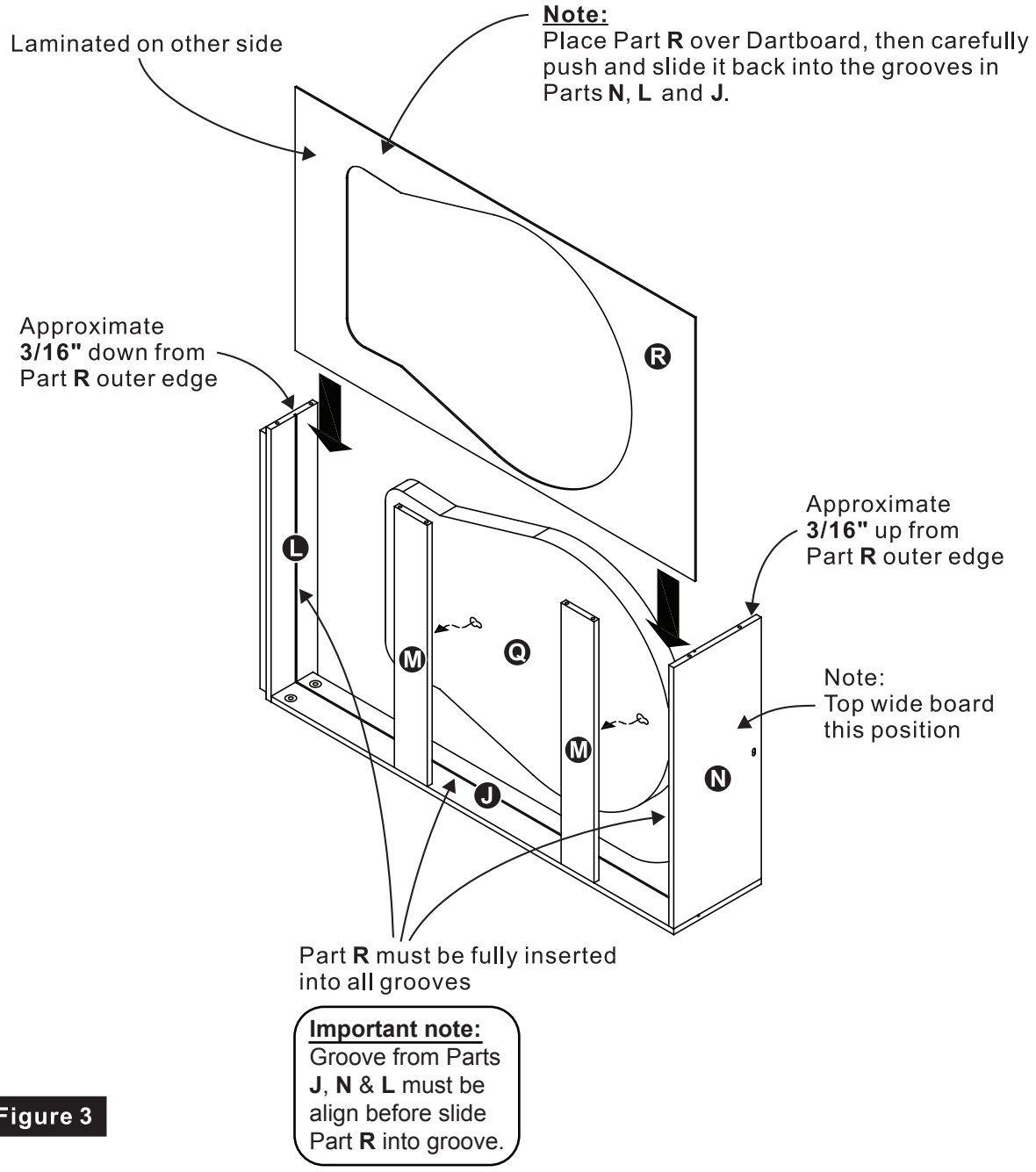

Figure 3

All Rights Reserved
©2014 Escalade Sports

6. Attach Part **K** to partially assembled Upper Cabinet using Phillips Flat Head Bolts (**H1**) and Wood Dowel Pins (**H4**). See **Figure 4**. Tighten, but do Not over tighten or strip out **H1** Bolts.

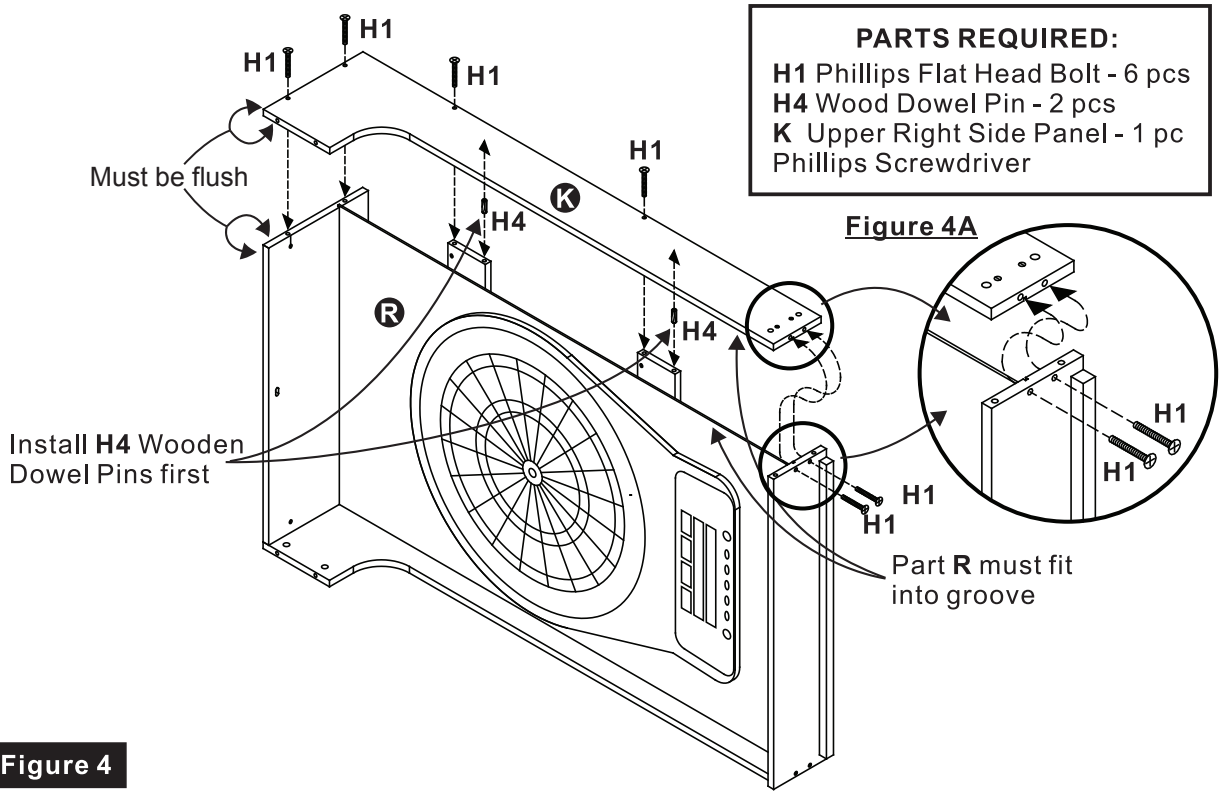

Figure 4

7. Screw 4 pcs Panel Bolts (**H2**) into Factory Installed Inserts on Part **P**. Tighten, but do NOT over tighten or strip out **H2** Bolts.
8. Insert 4 pcs Panel Bolt Locks (**H3**) into holes on Parts **J** and **K**. Make sure the opening on the Panel Bolt Locks (**H3**) points upward. See **Figure 5A**
9. Attach Part **P** to Parts **J** and **K**. Tighten Panel Bolt Locks (**H3**) with a Phillips Screwdriver. See **Figure 5B**.

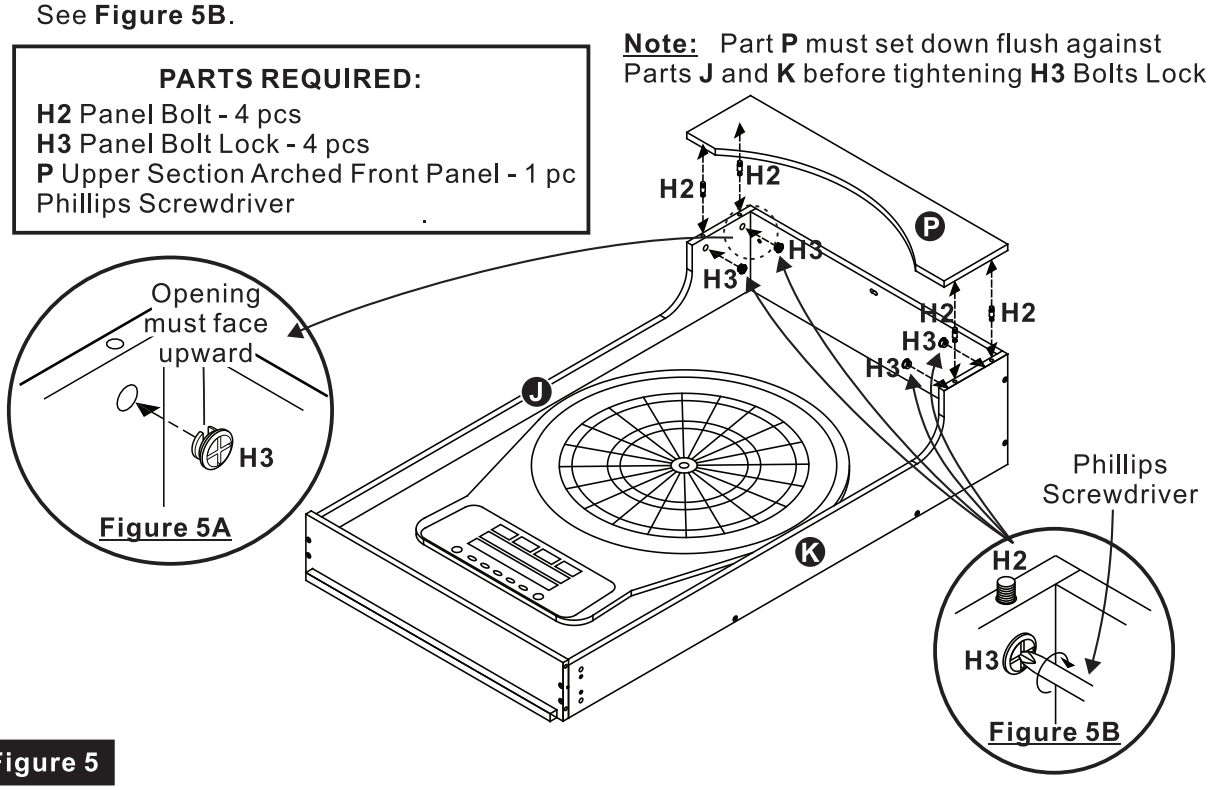

Figure 5

All Rights Reserved
©2014 Escalade Sports

10. Attach Part **S** to back of assembled Upper Cabinet using Phillips Round Head Screw (**H9**). See **Figure 6**. Tighten, but do Not over tighten or strip out **H9** Screws.

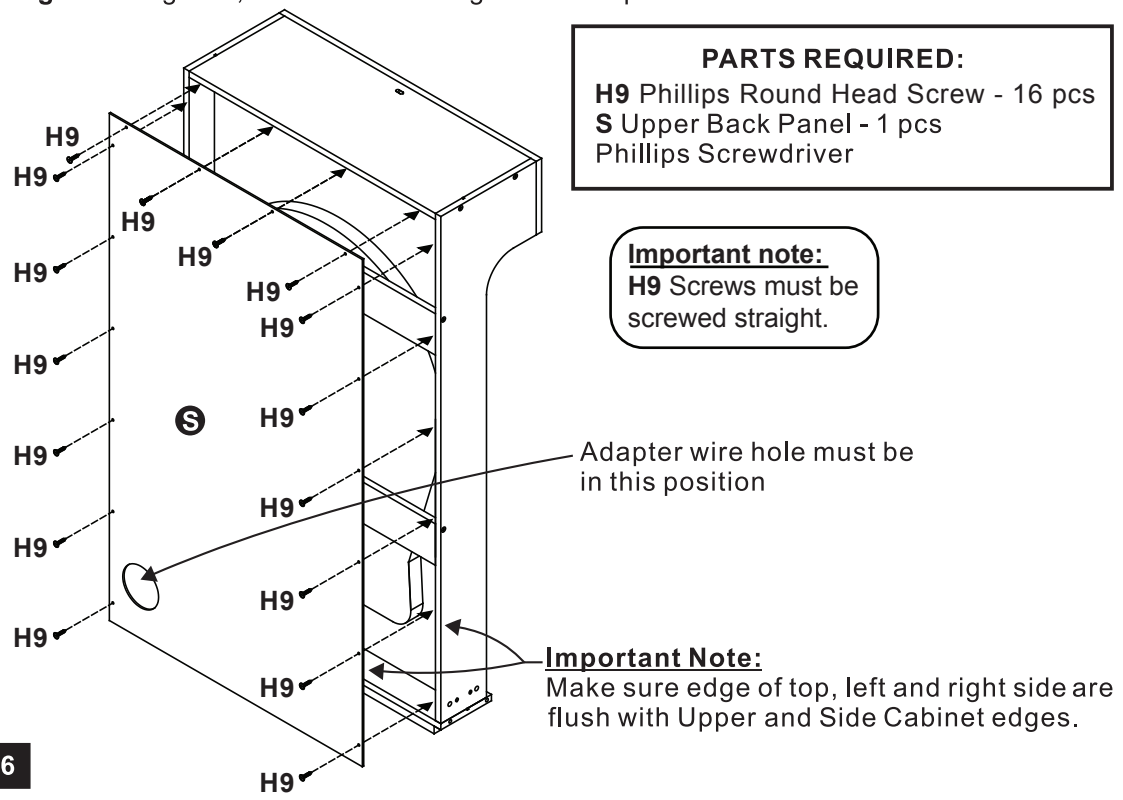

Figure 6

11. Attach Parts **C** to Part **A** using 4 pcs Phillips Flat Head Bolt (**H1**). See **Figure 7**. Tighten, but do Not over tighten or strip out **H1** Bolts.
12. Insert Wood Dowel Pins (**H4**) into pre-drilled holes on Parts **D**. Attach Parts **D** to Part **A**. See **Figure 7**.

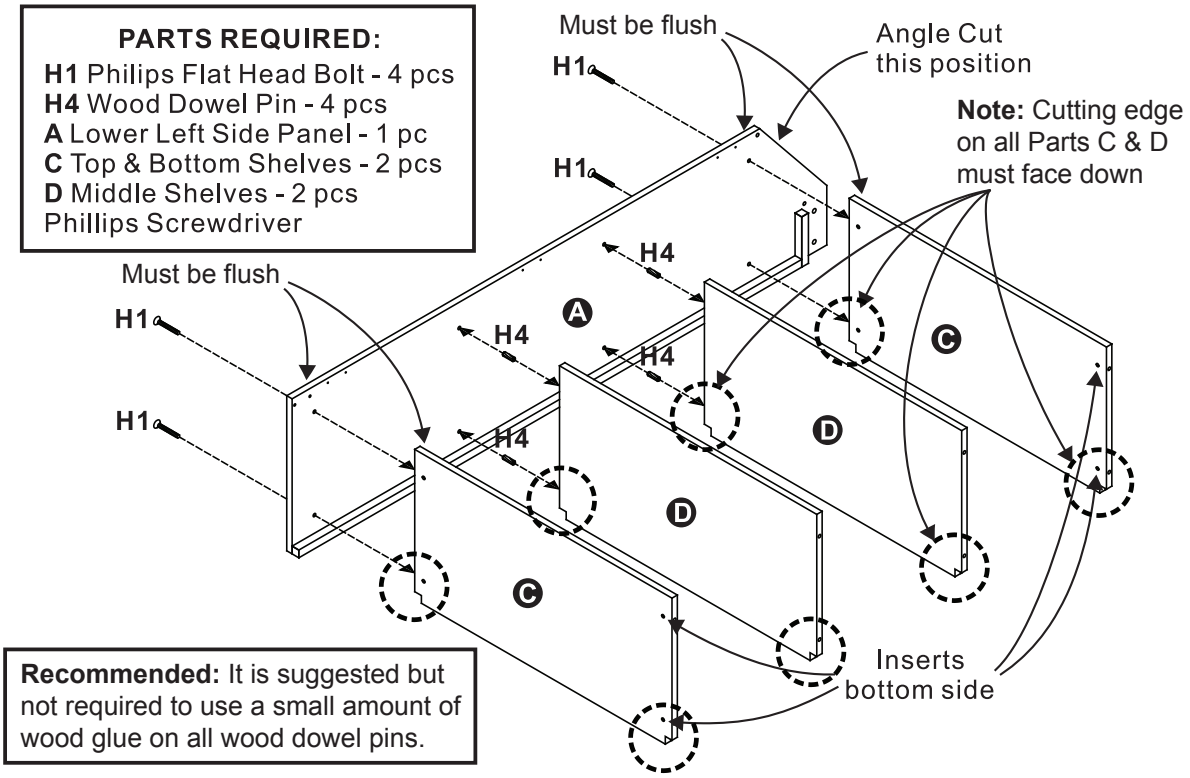

Figure 7

All Rights Reserved
©2014 Escalade Sports

13. Install 4 pcs Wood Dowel Pins (**H4**) into Part **E**. Attach Part **E** to **A**. See **Figure 8**.
14. Install 4 pcs Wood Dowel Pins (**H4**) into 2 pcs Part **D**.
15. Attach Part **B** to partially assembled Lower Cabinet using 4 pcs Phillips Flat Head Bolts (**H1**) to secure it to 2 pcs Part **C**.
    Important Note: Do NOT tighten H1 Bolts at this time.
16. Attach Part **T** to Lower Cabinet using 2 pcs Pivot Pins (**H7**).
17. Fully tighten but do Not over tighten or strip out **H1** Bolts.

PARTS REQUIRED:

H1 Phillips Flat Head Bolt - 4 pcs
H4 Wood Dowel Pin - 8 pcs
H7 Pivot Pins - 2 pcs
B Lower Right Side Panel - 1 pc
E Base Cross Panel - 1 pc
T Tilt-Down Door Panel - 1 pc
Phillips Screwdriver

Important note:
This step requires help from another adult.

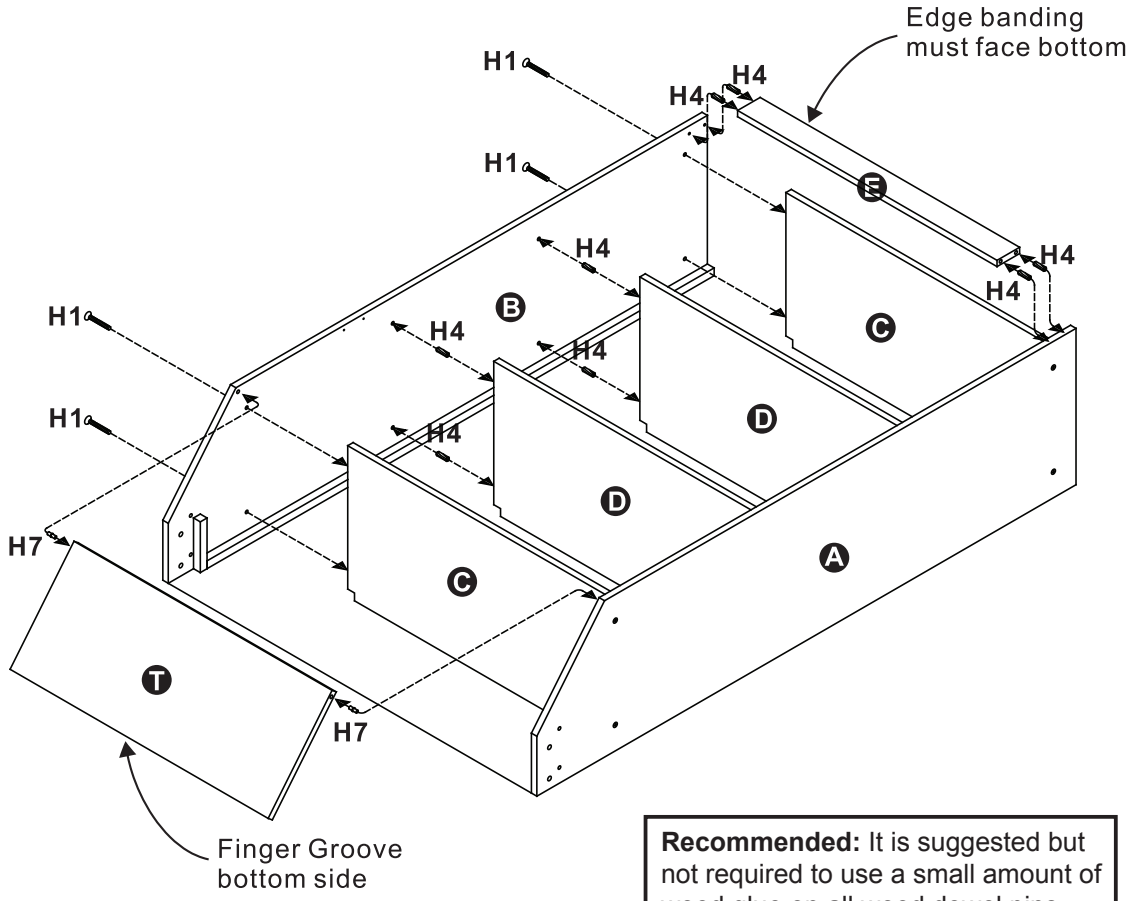

Recommended: It is suggested but not required to use a small amount of wood glue on all wood dowel pins.

Figure 8

All Rights Reserved
©2014 Escalade Sports

18. Attach Door Magnet (**H10**) to Part **B** using Phillips Round Head Screws (**H9**). See **Figure 9**.
19. Attach Door Magnet Attachment (**H11**) to Part **G** using 2 pcs Phillips Flat Head Screw (**H12**).
20. Attach 3 pcs Door Hinges (**H8**) to Part **G** using 6 pcs Phillips Round Head Screws (**H9**) and 3 pcs Phillips Flat Head Screws (**H12**). See **Figure 9A**.
21. **Note: With help from another adult**, attach Part **G** to Part **A** using 6 pcs Phillips Round Head Screws (**H9**) for each hinges. See **Figure 9A**.
    Note: Tighten all screws, but do Not over tighten or strip the screws.

PARTS REQUIRED:

H8 Door Hinge - 3 pcs
H9 Phillips Round Head Screws - 14 pcs
H10 Door Magnet - 1 pc
H11 Door Magnet Attachment - 1 pc
H12 Phillips Flat Head Screw - 5 pcs
G Door Panel - 1 pc
Phillips Screwdriver

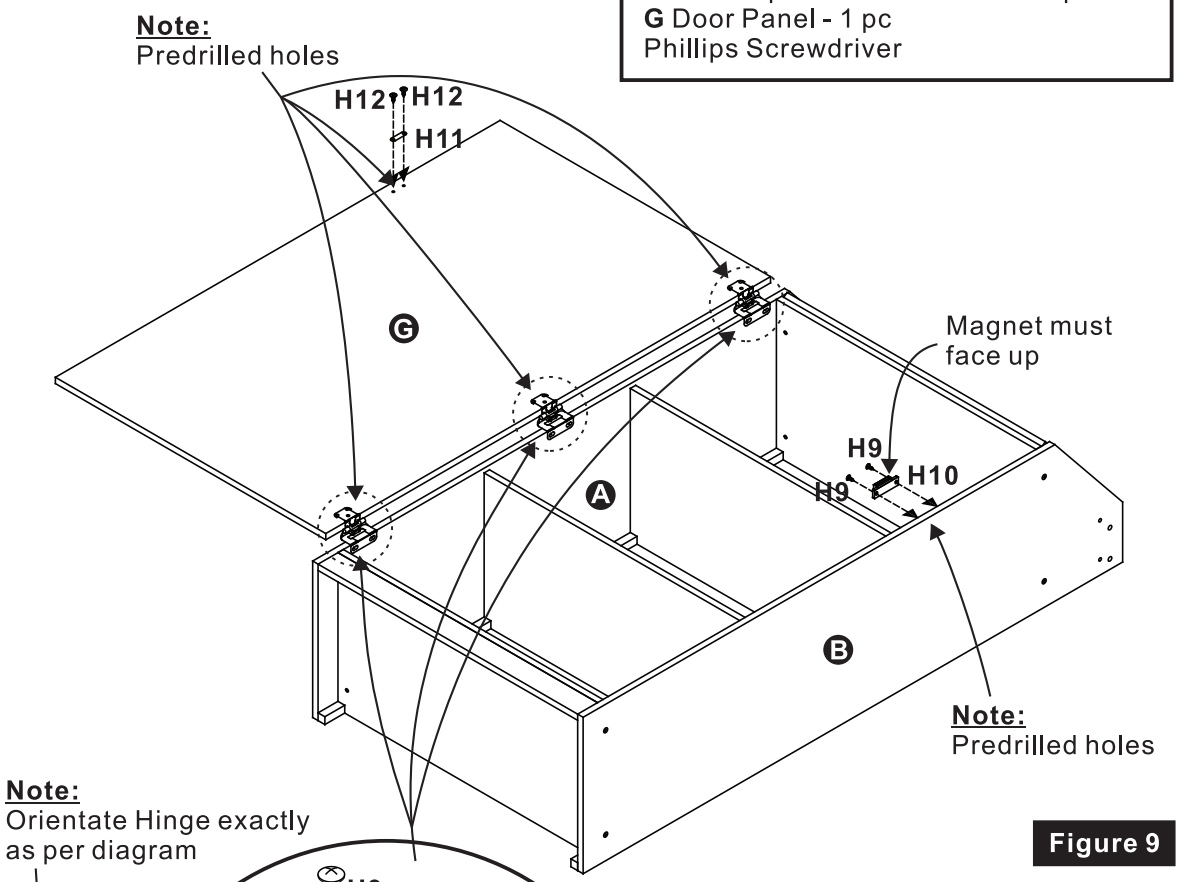

Figure 9

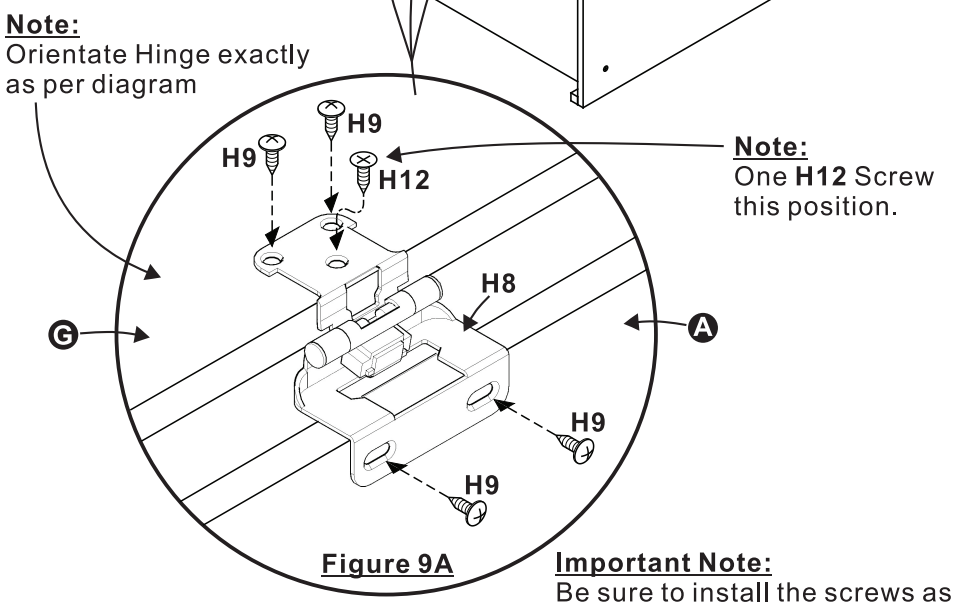

Figure 9A

Important Note:
Be sure to install the screws as per diagram when installing the door hinges.

All Rights Reserved
©2014 Escalade Sports

22. **Note: with help from another adult.**
Attach Upper Cabinet Assembly to Lower Cabinet Assembly using 4 pcs Allen Head Bolts (**H13**), 4 pcs Flat Washer (**H14**) and 4 pcs Phillips Flat Head Bolts (**H1**)
See **Figure 10**. Tighten, but do Not over tighten or strip our **H14 & H1** Bolts.

PARTS REQUIRED:
H1 Phillips Flat Head Bolt - 4 pcs
H13 Allen Head Bolt - 4 pcs
H14 - Flat Washer - 4 pcs
Phillips Screwdriver

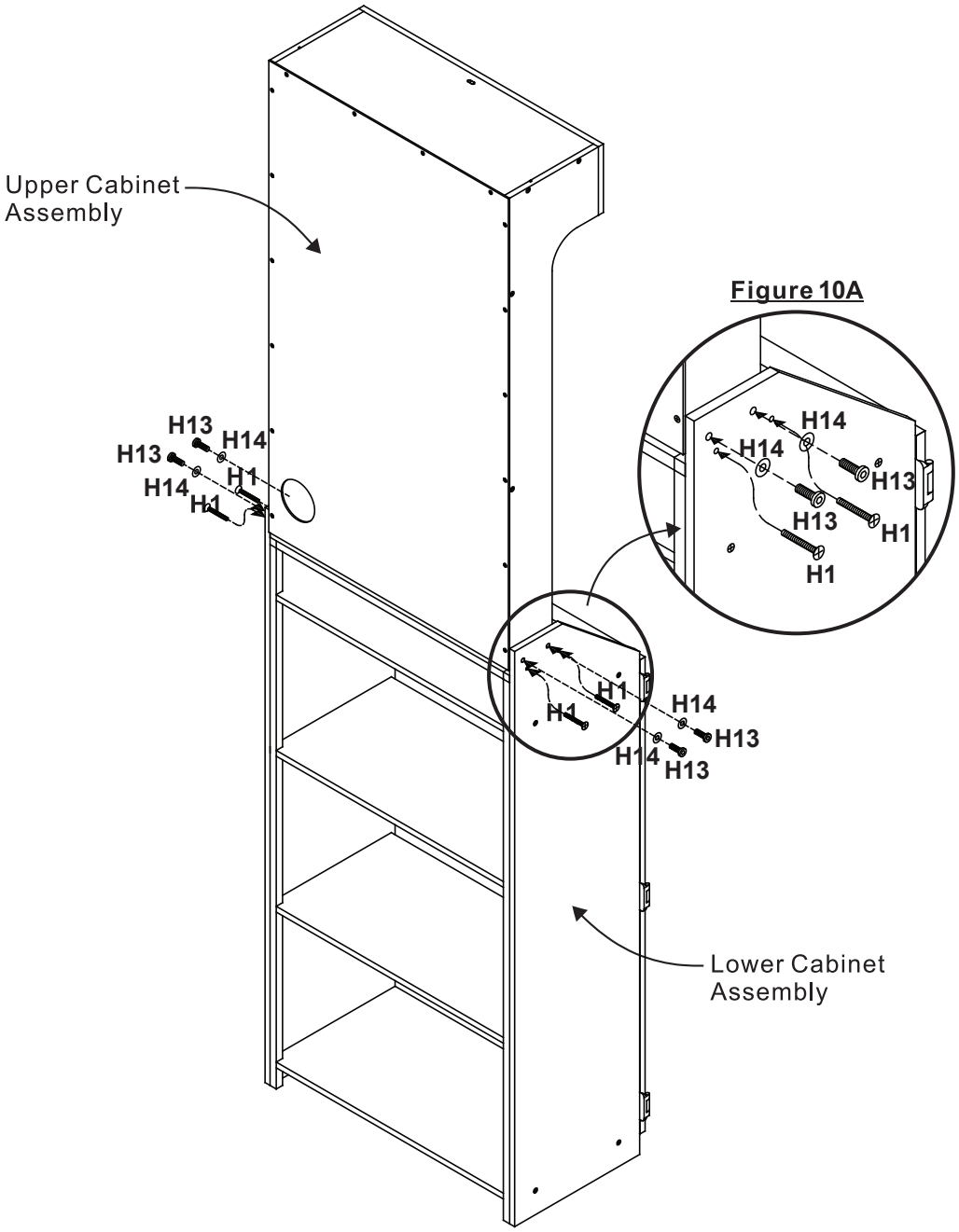

Figure 10

All Rights Reserved
©2014 Escalade Sports

23. Plug in the AC adapter to the back of dartboard and pull through Adapter Hole in Part **S**. See **Figure 11**.
24. **Note: with help from another adult.**
Stand up assembled cabinet. Attach Part **F** to back of Lower Cabinet Assembly using 26 pcs Phillips Round Head Screw (**H9**). See **Figure 11**.

PARTS REQUIRED:
H9 Phillips Round Head Screw - 26 pcs
F Lower Back Cover - 1 pc
Phillips Screwdriver

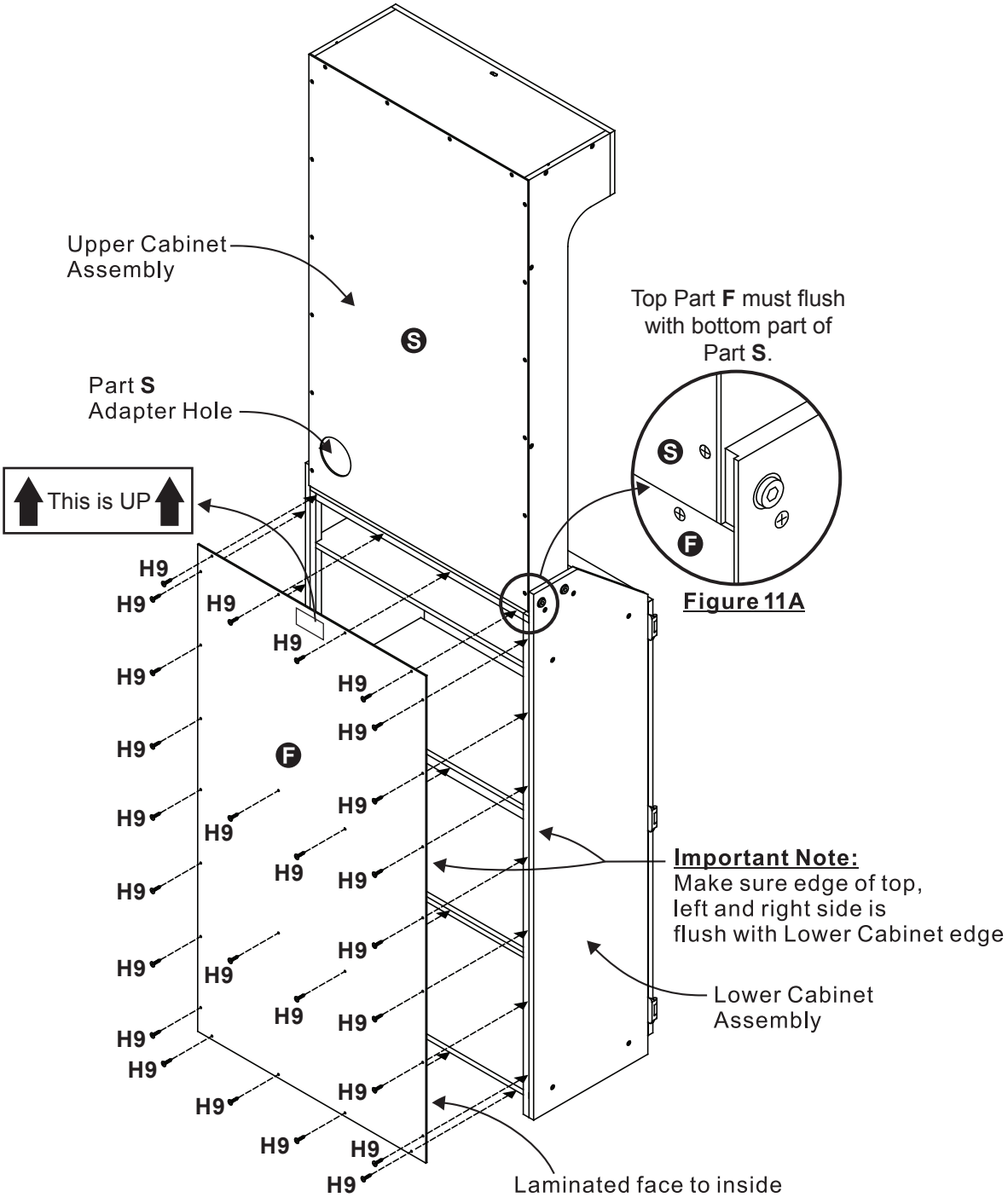

Figure 11

All Rights Reserved
©2014 Escalade Sports

PRODUCT PART LIST
E800FS1010

Ref	Part#	Description	Qty
A	E800FS1010-A	Lower Left Side Panel	1
B	E800FS1010-B	Lowe Right Side Panel	1
C	E800FS1010-C	Top & Bottom Shelves	2
D	E800FS1010-D	Middle Shelves	2
E	E800FS1010-E	Base Cross Panel	1
F	E800FS1010-F	Lower Back Cover	1
G	E800FS1010-G	Door Panel	1
J	E800FS1010-J	Upper Left Side Panel	1
K	E800FS1010-K	Upper Right Side Panel	1
L	E800FS1010-L	Upper Section Bottom Panel	1
M	E800FS1010-M	Dartboard Anchor Panel	2
N	E800FS1010-N	Upper Panel	1
P	E800FS1010-P	Upper Section Arched Front Panel	1
Q	E800FS1010-Q	Dartboard	1
R	E800FS1010-R	Front Baffle Panel	1
S	E800FS1010-S	Upper Back Cover	1
T	E800FS1010-T	Tilt-Down Door Panel	1
H1	E650FSBK-H1	40 x 5mm – Phillips Flat Head Bolt	24
H2	E650FSBK-H2	25 x 6mm – Panel Bolt	4
H3	E650FSBK-H3	Panel Bolt Lock	4
H4	E650FSBK-H4	20 x 6mm – Wood Dowel Pin	16
H5	E650FSBK-H5	18 x 6mm – Allen Head Bolt	2
H7	E650FSBK-H7	16 x 5mm – Pivot Pin	2
H8	E650FSBK-H8	Door Hinge	3
H9	E650FSBK-H9	12 x 3.5mm – Phillips Round Head Screw	56
H10	E650FSBK-H10	Door Magnet	1
H11	E650FSBK-H11	Door Magnet Attachment	1
H12	E650FSBK-H12	10 x 3.5mm – Phillips Flat Head Screw	5
H13	E650FSBK-H13	25 x 8mm – Allen Head Bolt	4
H14	E650FSBK-H14	8 x 19mm – Flat Washer	4
H15	E650FSBK-H15	Allen Wrench	1

All Rights Reserved
©2014 Escalade Sports

LIMITED WARRANTY

Escalade®Sports (the Company) warrants the Product to be free from defects in workmanship and materials under normal use and conditions **FOR A PERIOD OF 90 DAYS FROM THE DATE OF ORIGINAL PURCHASE** in the United States and Canada.

Product Registration Card

The Product Registration Card must be filled out completely and mailed to the Company at the address printed on the card within 10 days from the date of your purchase of the Product.

What Is Covered

Except as provided below, this Limited Warranty covers all defects in materials and workmanship. This Limited Warranty is void if the Product is:

- Damaged through improper usage, negligence, misuse, abuse, transportation damage, acts of nature, or accident (including failure to follow the instructions supplied with the Product)
- Used in commercial applications or rentals
- Modified or repaired by anyone not authorized by the Company

What Is Not Covered

This Limited Warranty does not cover:

- Any expendable items such as batteries, light bulbs, fuses, accessories, cosmetic parts, tools and other items that wear out.
- due to normal usage. Any costs you may incur for delivery, installation, assembly or transport of your product.

What The Company Will Pay For

If during the Limited Warranty period, any part or component of the Product is found by the Company to be defective, the Company will, at its option, repair the Product, replace the Product with a new Product (either the same or an equivalent model) or cause the original retailer of the Product to exchange the Product with a new Product (either the same or an equivalent model) or refund the original purchase price of the Product, without charge for labor or parts. The Company's obligation to repair, replace or exchange the Product, however, shall be limited to the amount of the original purchase price of the Product.

How To Obtain Warranty Service

In order to enforce your rights under this Limited Warranty, you must follow these procedures:

- You must have completed and mailed the Product Registration Card to the Company within 10 days of purchase of the Product.
- You must include THE ORIGINAL COPY OF YOUR SALES RECEIPT.
- You must call the Company's Consumer Service Department at 1 - 800 - 526 - 0451 from 9:00 A.M. to 5:00 P.M. (EST) to notify the Company of the nature of the problem.
- If you are instructed to return the Product to the Company for servicing, you are responsible for shipping the Product, at your expense, to the address designated by the Company in packaging that will protect against further damage.
- You must also include your name, address, daytime telephone number, model number of the Product and a description of the problem.

THIS LIMITED WARRANTY IS AVAILABLE ONLY TO THE ORIGINAL PURCHASER OF THE PRODUCT AND IS VALID IN THE UNITED STATES AND CANADA ONLY.

THE COMPANY'S LIABILITY IS LIMITED TO THE REPAIR OR REPLACEMENT, AT ITS OPTION, OF ANY **DEFECTIVE PRODUCT AND SHALL NOT INCLUDE ANY LIABILITY FOR INDIRECT, INCIDENTAL OR CONSEQUENTIAL DAMAGES OF ANY KIND.**

THIS WARRANTY IS EXPRESSLY MADE IN LIEU OF ALL OTHER WARRANTIES, EXPRESSED OR IMPLIED.

SOME STATES DO NOT ALLOW LIMITATIONS ON HOW LONG AN IMPLIED WARRANTY LASTS OR DO NOT ALLOW FOR EXCLUSION OF INCIDENTAL OR CONSEQUENTIAL DAMAGES. TO THAT EXTENT, THE ABOVE LIMITATIONS MAY NOT APPLY TO YOU.

This Limited Warranty gives you specific legal rights, but you may also have other rights that vary from state to state.

If you have questions regarding this Limited Warranty or the operation of the Product, you may call or write us:

Consumer Service Department
817 Maxwell Ave.
Evansville, IN 47711
1-800-526-0451
www.escaladesports.com

All Rights Reserved
©2014 Escalade Sports

Arachnid®

The Originator of Electronic Dart Games!