Dimension/Specification

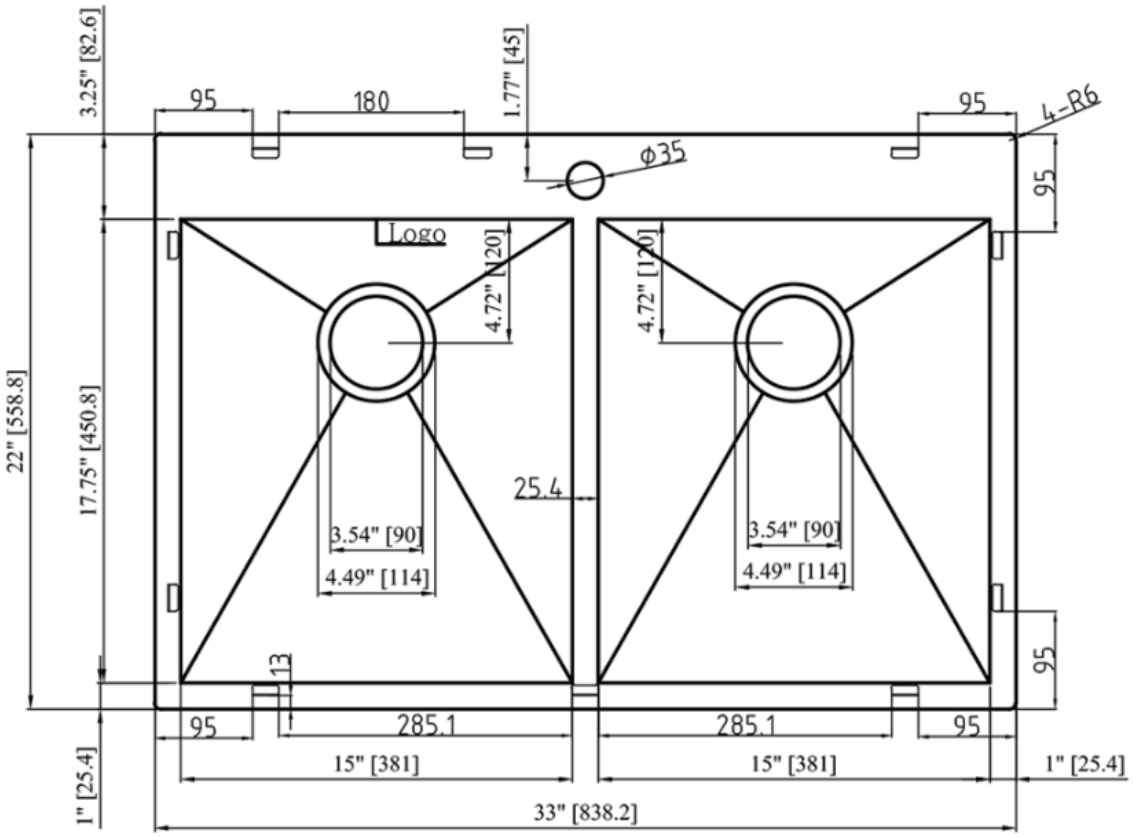

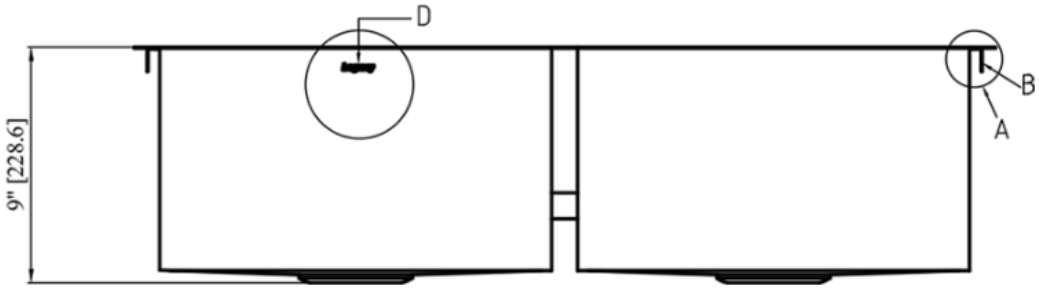

RX-SS43-3322B-55