Assembly Instructions

Caution : You must read this before you proceed

Recliner Chair

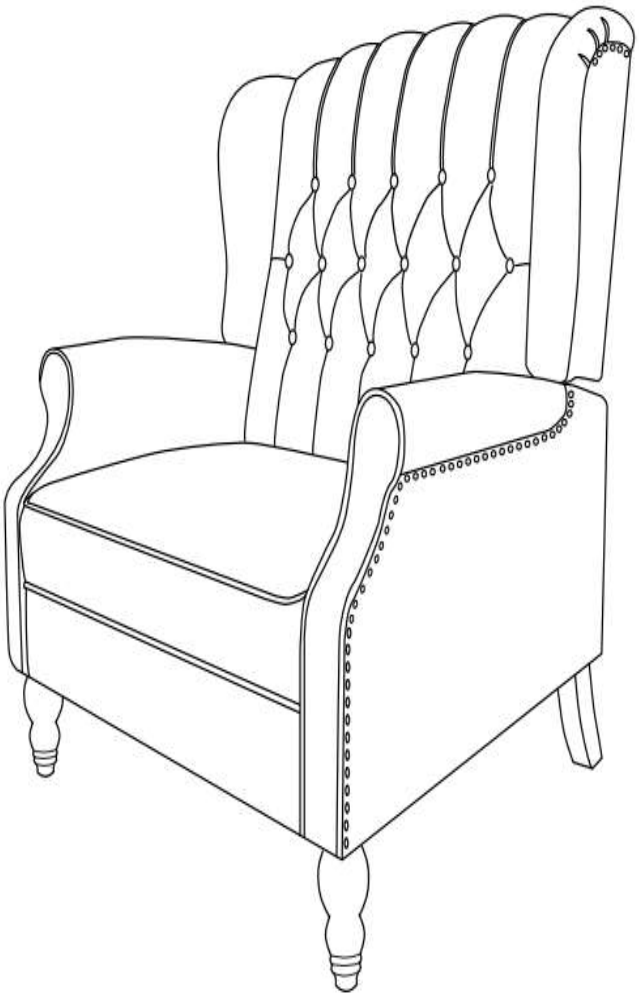

Parts List

Label	Picture	Description	QTY
A		Chair Backrest	1
B	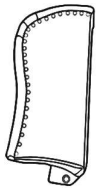	Right Wing	1
C	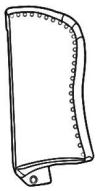	Left Wing	1
D		Chair Base	1
E		Front Leg	2
F		Right Hind Leg	1
G		Left Hind Leg	1

Hardware

Label	Picture	Description	QTY
①		Plastic Washer	3

②		Washer(M8)	7
③		Washer(M6)	3
④		Washer Ring	7
⑤		Bolt(M8*25mm)	7
⑥		Bolt(M6*40mm)	3
⑦		Allen Key(M6)	1
⑧		Allen Key(M8)	1

Assembly Preparation

Before Beginning Assembly:

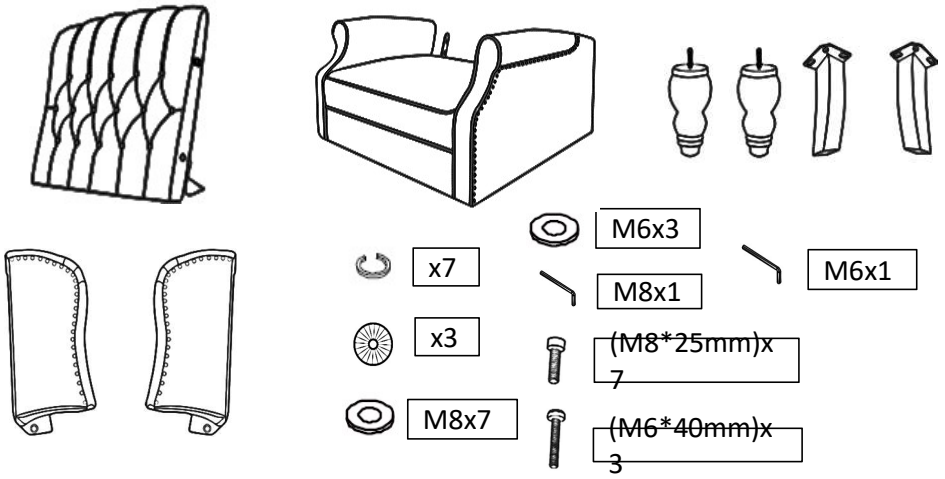

- Read instructions, cover to cover-
- Have 2 adults on hand for assembly-
- Do not assemble on flooring or carpet-
- Assemble on a clean non-marring surface (packing foam)-
- Save all packaging until finished-

Assembly Steps

OVERVIEW

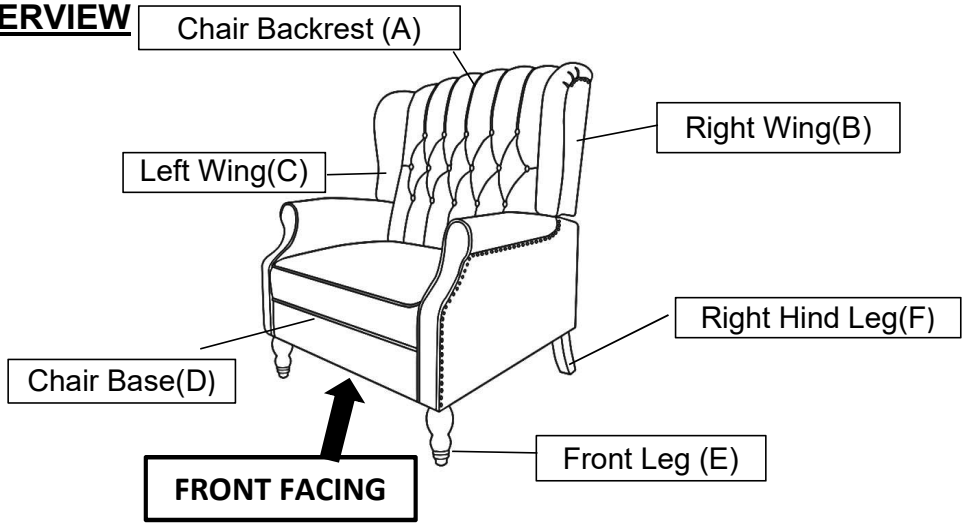

This Recliner Chair has multiple parts and may require up to some 30 minutes to assemble.To give you an overview of the Recliner Chair parts, the above
picture is to help you put the various parts into perspective. Please read through the instructions herebelow to familiarise the parts and steps before assembly.

Step 1

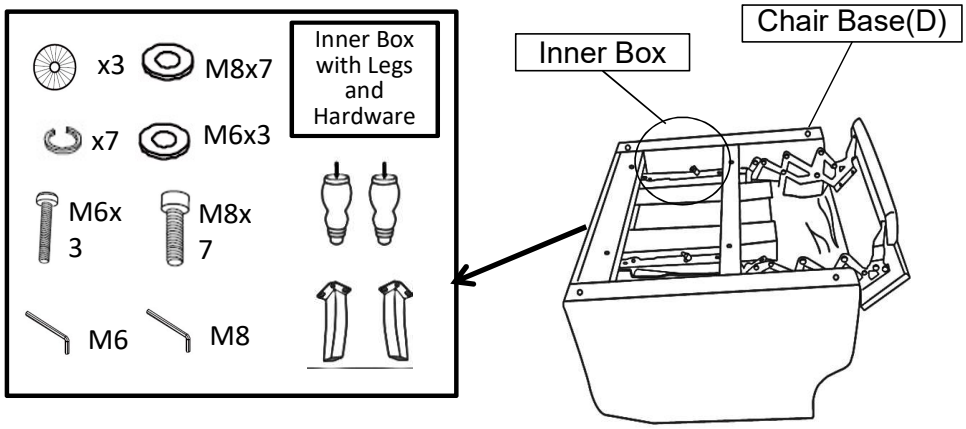

Place the Chair Base(D) facedown on a clean,non-marring surface.
Take out the four wooden legs and Hardware from inner box,as picture shown on above.

Step 2

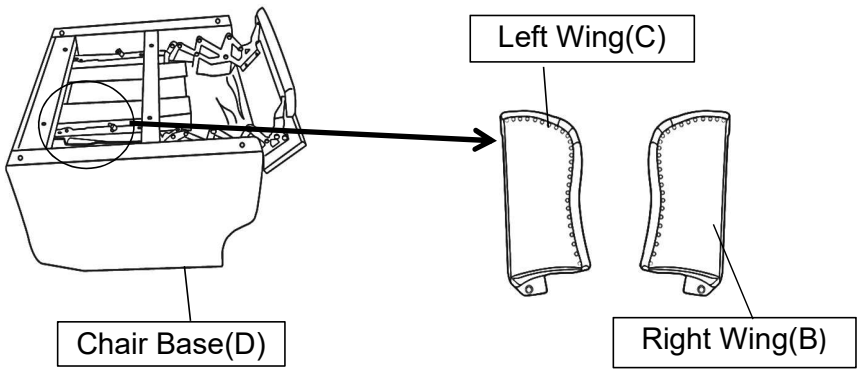

Turn the Chair Base(D) upside down on a clean,non-marring surface.
Extend the Footrest to open.
Carefully take out inner box stowed as shown above.
Open it and you will find Right Wing(B) & Left Wing(C).
Stow the Footrest to original position.

Step 3

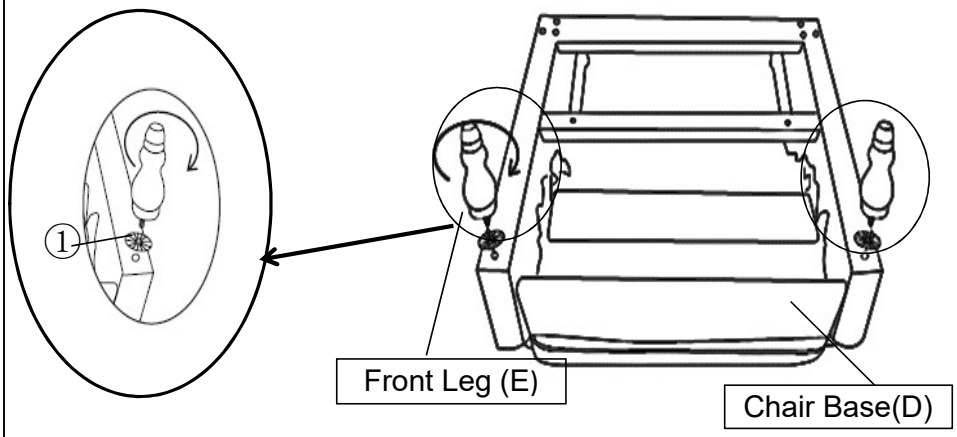

Position the Chair Base(D) on its back，as shown above.
Attach the Front Leg(E) to Chair Base(D) with Plastic Washer(①) by turning the legs clockwise as shown.
Repeat the same step to install the remaining Front Leg(E).
Note: The use of Plastic Washer(①) are OPTIONAL and are especially useful to help alleviate slight wobbleness. Some Legs may need more than one Plastic Washer(①) whilst some Legs may not need any.

Step 4

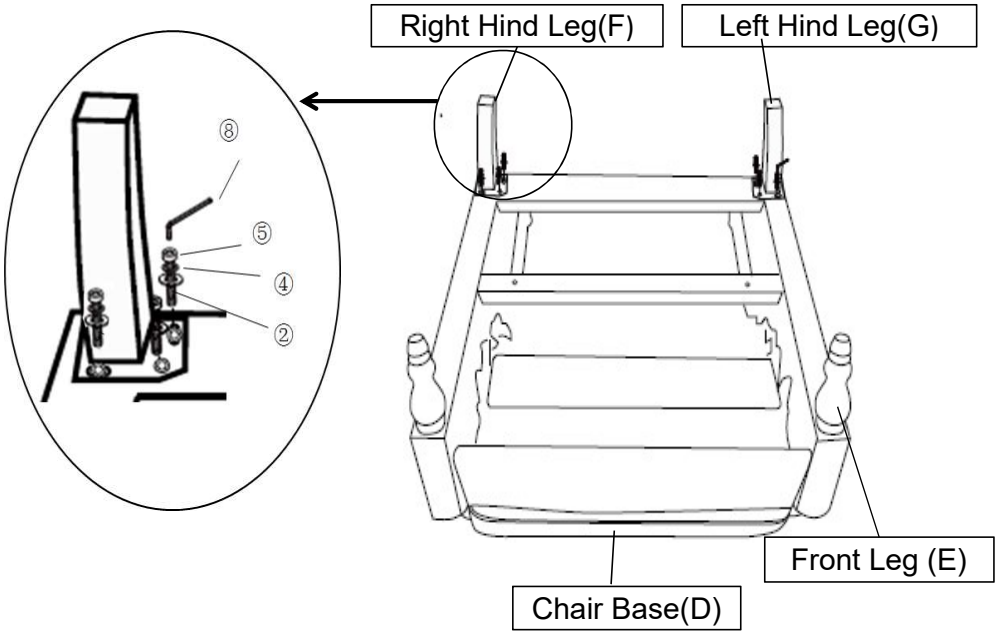

Attach the Right Hind Leg(F) and Left Hind Leg(G) to Chair Base(D) use Bolt(⑤) ,Washer Ring(④),Washer(②) with Allen Key(⑧)by turning the legs clockwise as shown.

Step 5

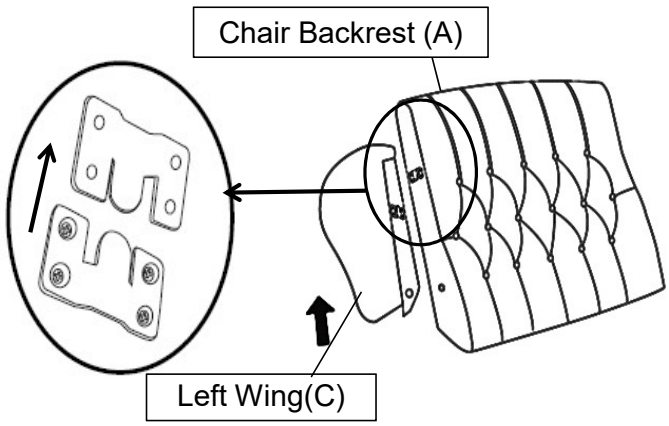

Position the Chair Backrest(A) on the flat surface.
Align the mounting positions of the Left Wing(C) with left side of Chair Backrest(A).
Then slide Left Wing(C) forward by hand to make sure it locks into the position as shown in the picture.
Repeat the same step to install the Right Wing(B).

Step 6

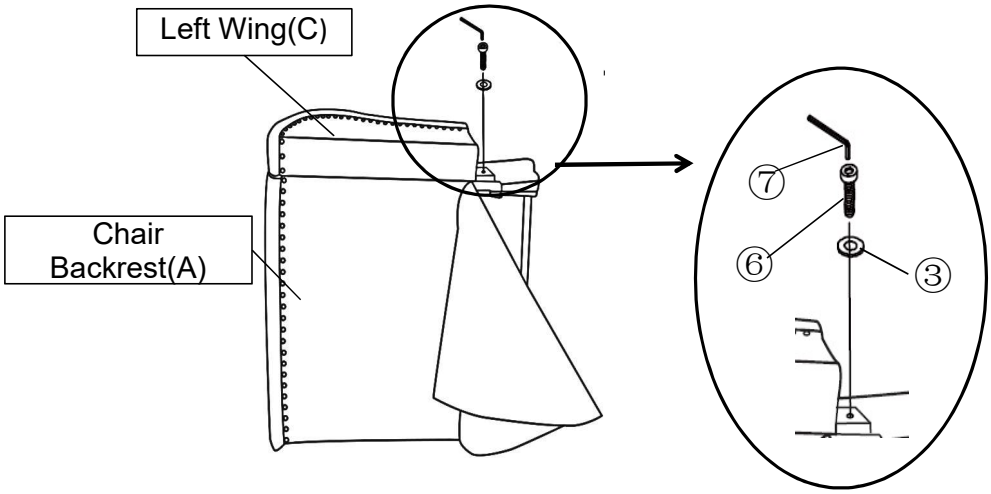

Attach Left Wing(C) to the Chair Backrest(A) using Bolts(⑥) and Washer(③) with Allen Key(⑦) as picture shown.
Repeat the same step to install the Right Wing(B).
Tighten all bolts at all joints completely.

Step 7	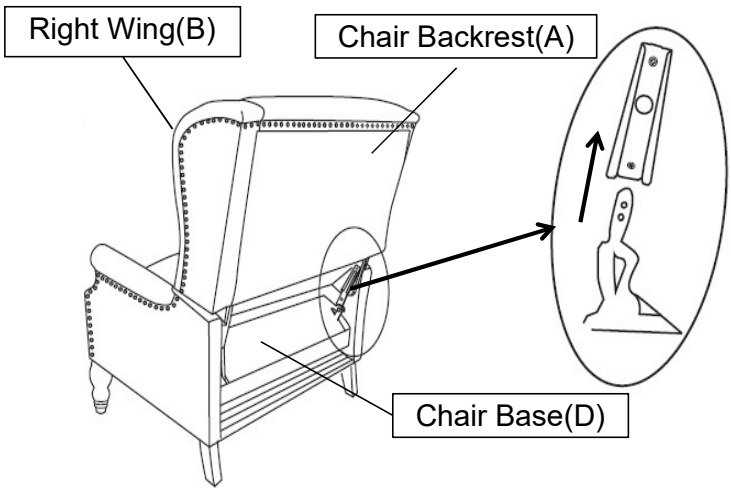
With assistance from your adult partner, hold up the fully assembled Chair Backrest(A) with Right Wings(B) and Left Wing(C), stand behind the chair. Insert the small metal arms on the sides of the Chair Backrest(A) into the prefabricated slide lock gadget on the Chair Base(D) as shown above. Firmly but gently, push the Chair Backrest(A) downwards until the Chair Backrest(A) is fully slotted and locked into position.	
Step 8	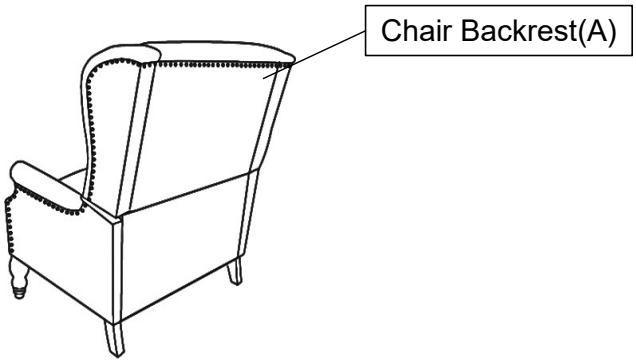
Smooth down the fabric flap on the Chair Backrest(A). Run your hands down both sides of the flap,from top to bottom, allowing the velcro tape to adhere to the flap under the seat of the chair.	

Step 9	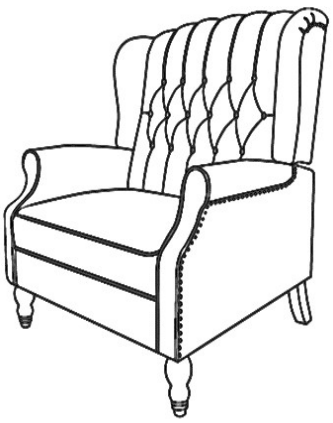
Make sure all parts are connected and securely locked into position. Your Chair is ready for use.	
Step 10	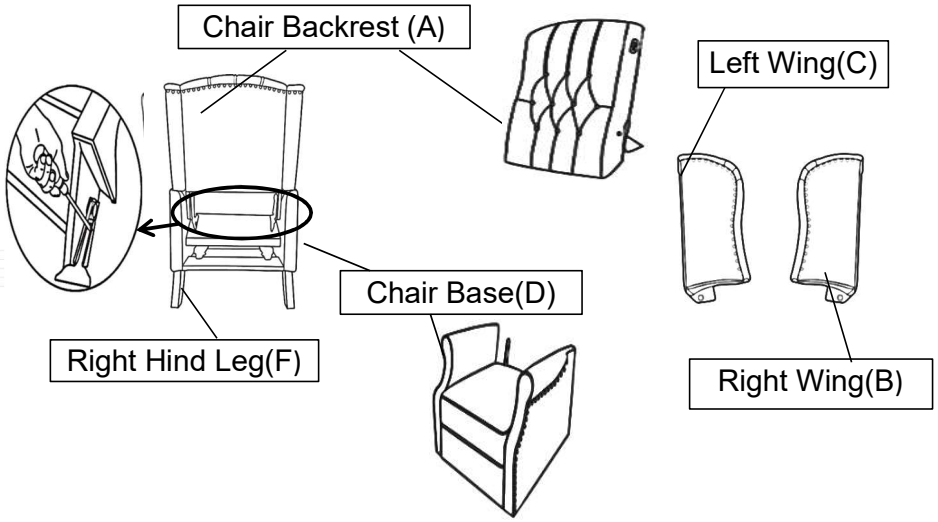
Disassembly Note:Open the flap on the Chair Backrest(A),use a screwdriver(Don't use fingers) pressing outward on the metal ear on the preattached Metal Bracket on one side of the Chair Base(D),with assistance of you adult partner to keep the Chair Base(D) in place, pull out the Chair Backrest(A) upward at the same time,repeat the same step for another side.Then the Chair Backrest(A) can be taken out.	

User Instructions.
Recliner Chair
Please read the Instruction Manual below carefully before use.
This is a Recliner Chair. At anytime in a reclined seat position or in the upright position. You may enjoy the rocking motion by using your body weight in a back-front rocking motion.
Supervise children, when in use of this Recliner.
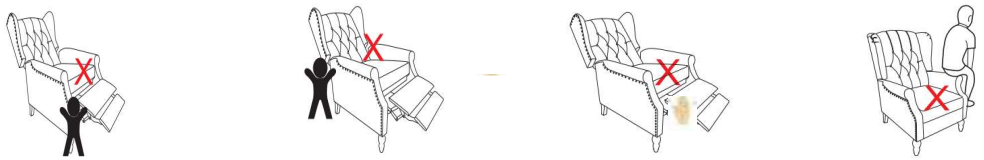
Do not let children stand in front of or behind the Push Back Chair when opening or closing the footrest.Do not put your hands inside the Footrest when opening or closing the footrest.Do not sit any armrest of this Push Back Chair.
To get into a reclined posture - To Recline backrest
Sit into the seat. Place your feet apart . Place your left and right arm onto the armrest. Synchronise a backward push with your arms. Use your body weight and push backwards into the seat into a fully reclined position.
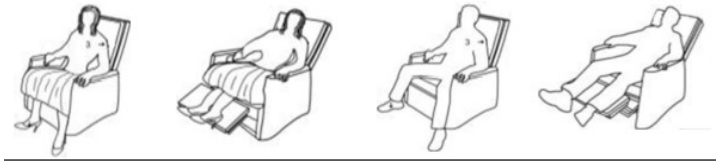
To get out of chair - move Seatback into Upright Position
Tilt your body weight slightly forward and upwards. The seat back will come up to an upright position. Where necessary, use either your arms help lift- push yourself out of the seat.
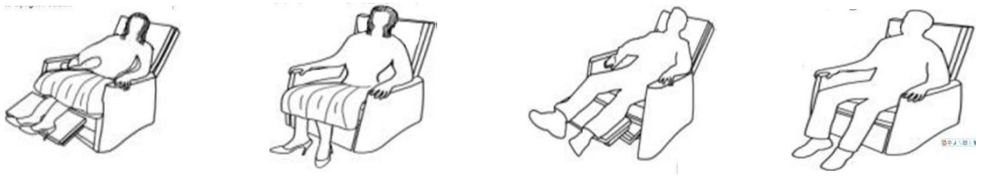

Care & Maintenance

- Do not put hot items directly on furniture surface
- Do not clean furniture with harsh cleansers or polish.
- Do not place furniture under direct sunlight.
- Do not place furniture near heating or cooling vents.
- Do not write on furniture without a padded barrier to protect the surface.
- Do not place furniture outside . For indoor use only .
- Not for commercial use. For residential use only .
- Stains may be removed with mild soap solution and damp cloth.
- Children should not climb or jump on the furniture.

- Dust and pick-up spills using a clean, non-colored, lint-free cloth .

Questions & Answers about Proposition 65

• What is Proposition 65?

Proposition 65 requires businesses to provide warnings to Californians about significant exposures to chemicals that cause cancer, birth defects or other reproductive harm. These chemicals can be in the products that Californians purchase, in their homes or workplaces, or that are released into the environment. By requiring that this information be provided, Proposition 65 enables Californians to make informed decisions about their exposures to these chemicals.

Proposition 65 also prohibits California businesses from knowingly discharging significant amounts of listed chemicals into sources of drinking water.

Proposition 65 requires California to publish a list of chemicals known to cause cancer, birth defects or other reproductive harm. This list, which must be updated at least once a year, has grown to include approximately 900 chemicals since it was first published in 1987.

• What types of chemicals are on the Proposition 65 list?

The list contains a wide range of naturally occurring and synthetic chemicals that include additives or ingredients in pesticides, common household products, food, drugs, dyes, or solvents. Listed chemicals may also be used in manufacturing and construction, or they may be byproducts of chemical processes, such as motor vehicle exhaust.

• What does a warning mean?

If a warning is placed on a product label or posted or distributed at a workplace, a business, or in rental housing, the business issuing the warning is aware or believes that it is exposing individuals to one or more listed chemicals.

By law, a warning must be given for listed chemicals unless the exposure is low enough to pose no significant risk of cancer or is significantly below levels observed to cause birth defects or other reproductive harm.

• Where can I get more information on Proposition 65?

If you have specific questions on the administration or implementation of Proposition 65, you can contact OEHHA's Proposition 65 program at P65.Questions@oehha.ca.gov, or by phone at (916) 445-6900.