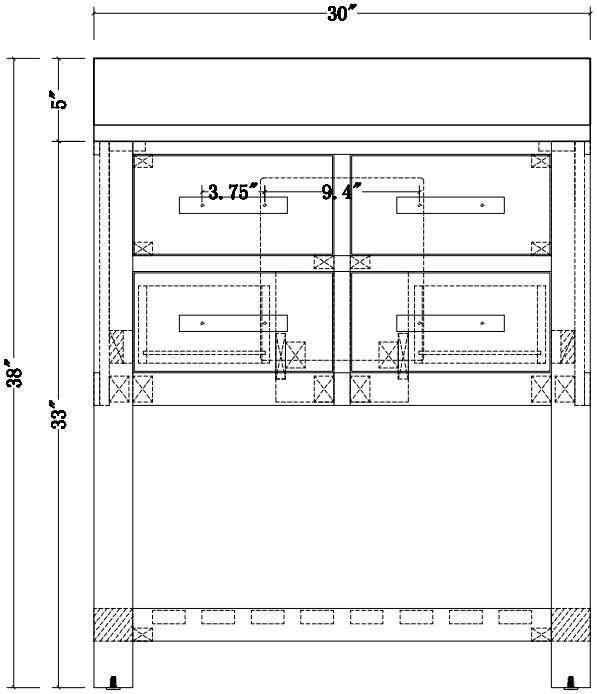
30″
5″
3.75″
9.4″
38″
33″

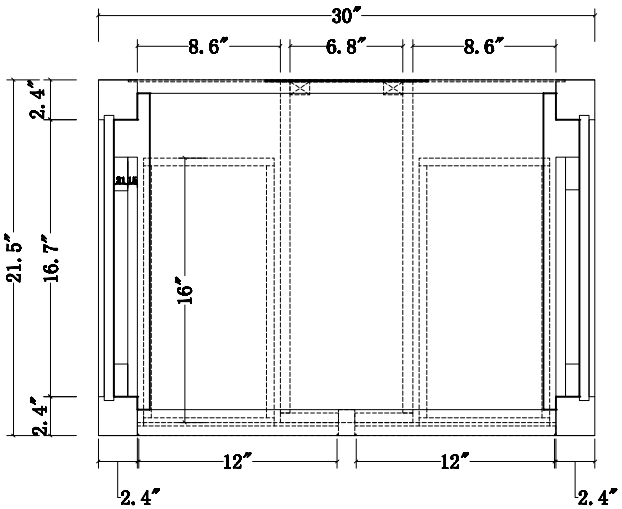
30″
8.6″
6.8″
8.6″
2.4″
21.5″
16.7″
16″
2.4″
12″
12″
2.4″
2.4″

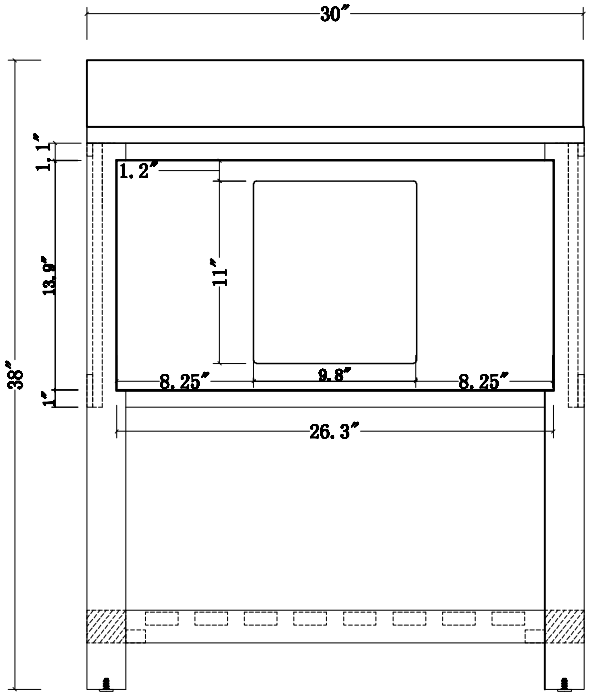
30″
1.1″
1.2″
13.9″
11″
38″
8.25″
9.8″
8.25″
1″
26.3″

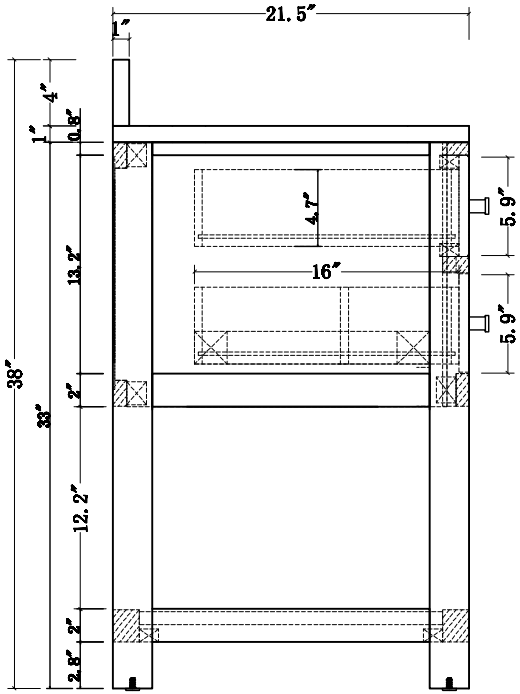
21.5″
1″
4″
1″
0.8″
4.7″
5.9″
13.2″
16″
5.9″
38″
2″
33″
12.2″
2″
2.8″

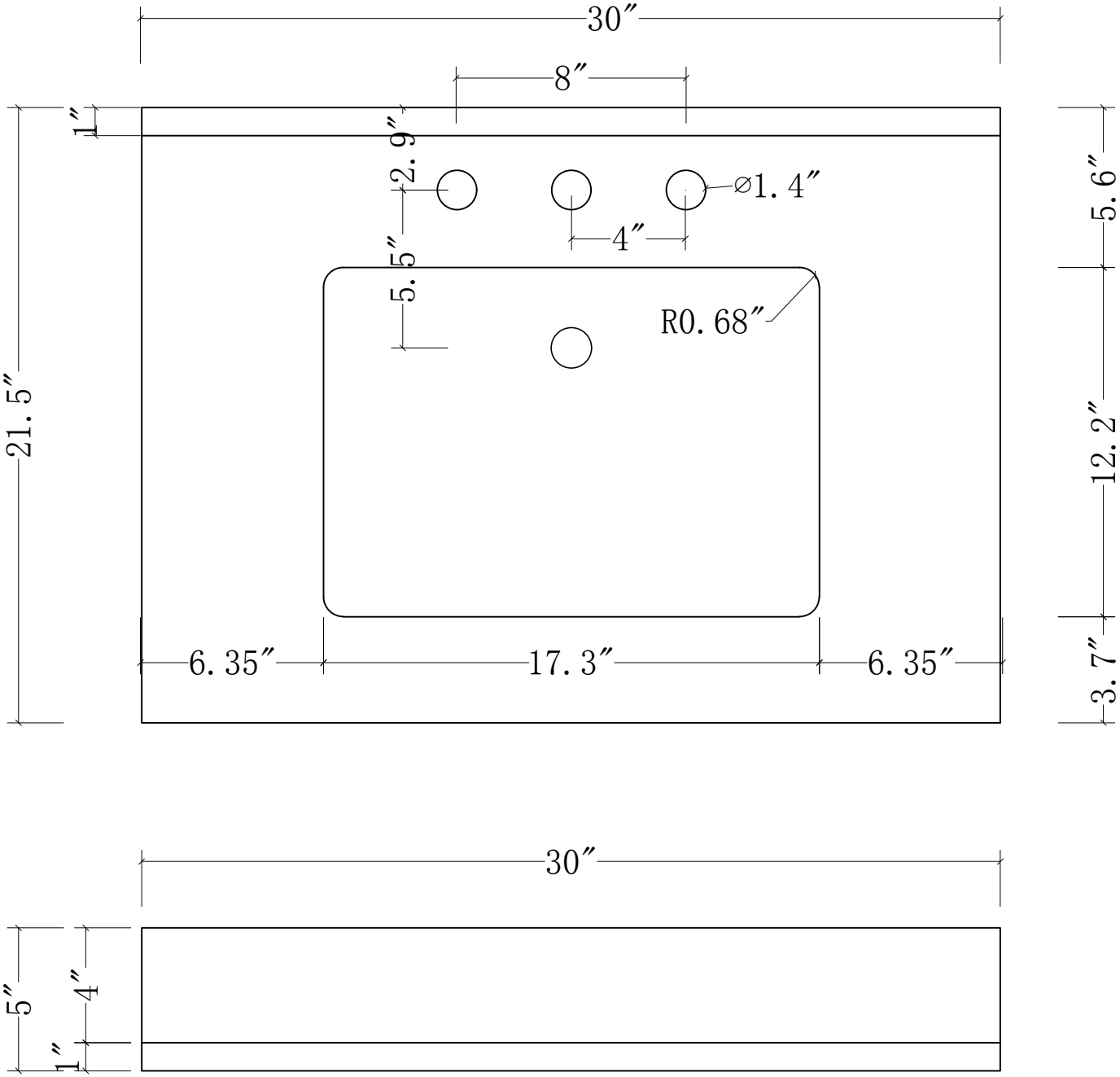
30″
8″
1″
2.9″
⌀1.4″
4″
5.5″
R0.68″
21.5″
5.6″
12.2″
3.7″
6.35″
17.3″
6.35″
30″
5″
4″
1″

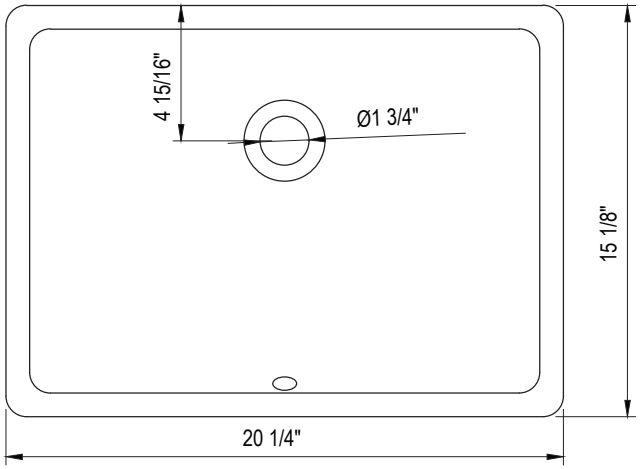
4 15/16"
Ø1 3/4"
15 1/8"
20 1/4"

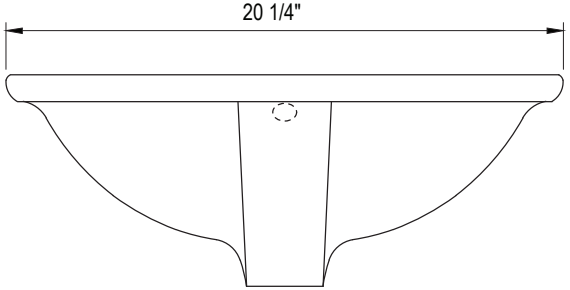
20 1/4"

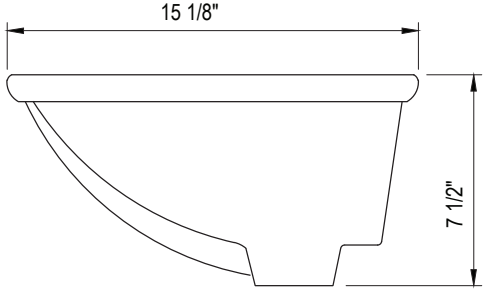
15 1/8"
7 1/2"

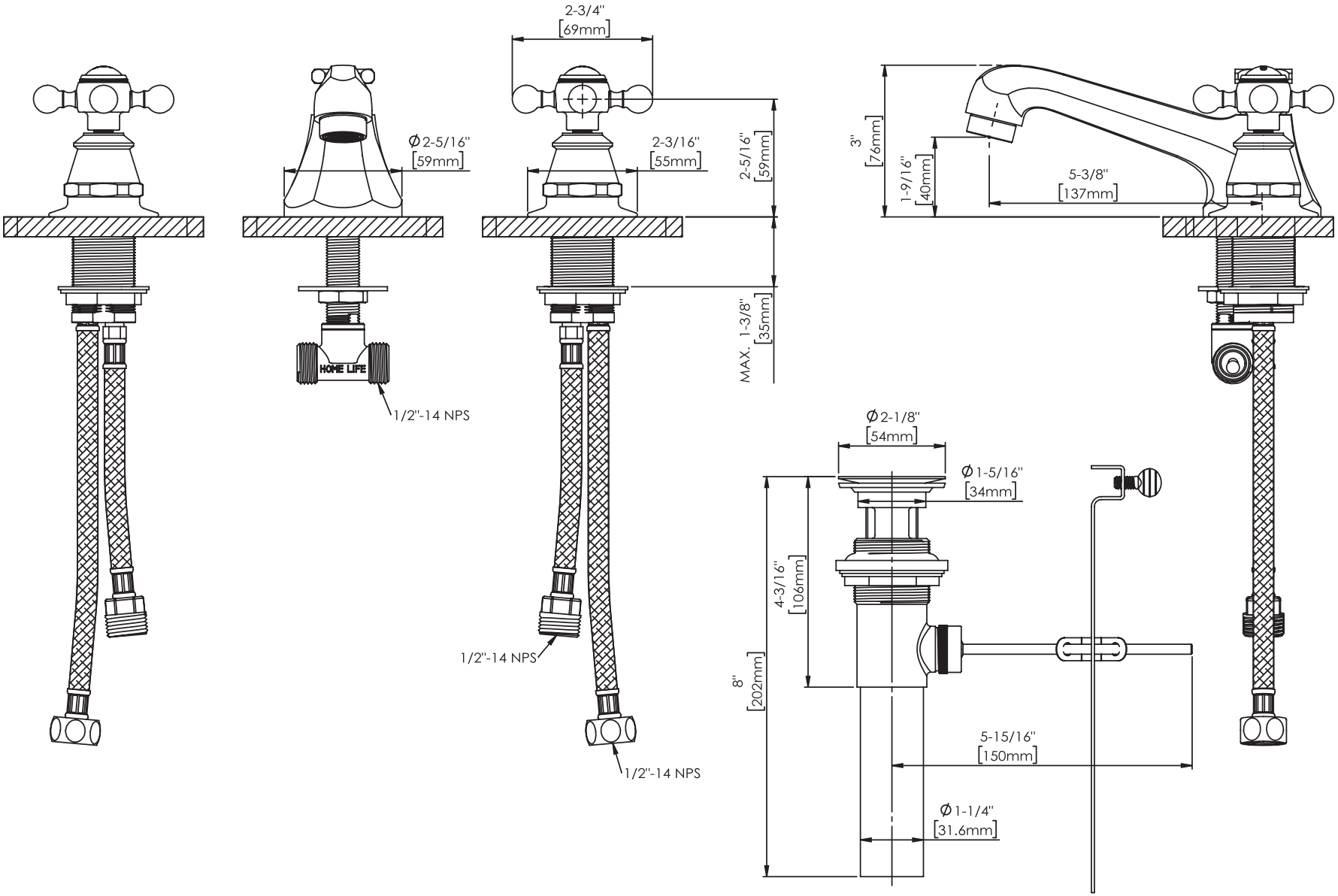
2-3/4"
[69mm]
Ø2-5/16"
[59mm]
2-3/16"
[55mm]
2-5/16"
[59mm]
MAX. 1-3/8"
[35mm]
HOME LIFE
1/2"-14 NPS
1/2"-14 NPS
1/2"-14 NPS
3"
[76mm]
1-9/16"
[40mm]
5-3/8"
[137mm]
Ø2-1/8"
[54mm]
Ø1-5/16"
[34mm]
4-3/16"
[106mm]
8"
[202mm]
5-15/16"
[150mm]
Ø1-1/4"
[31.6mm]