V1.0

Cabinet > Manual

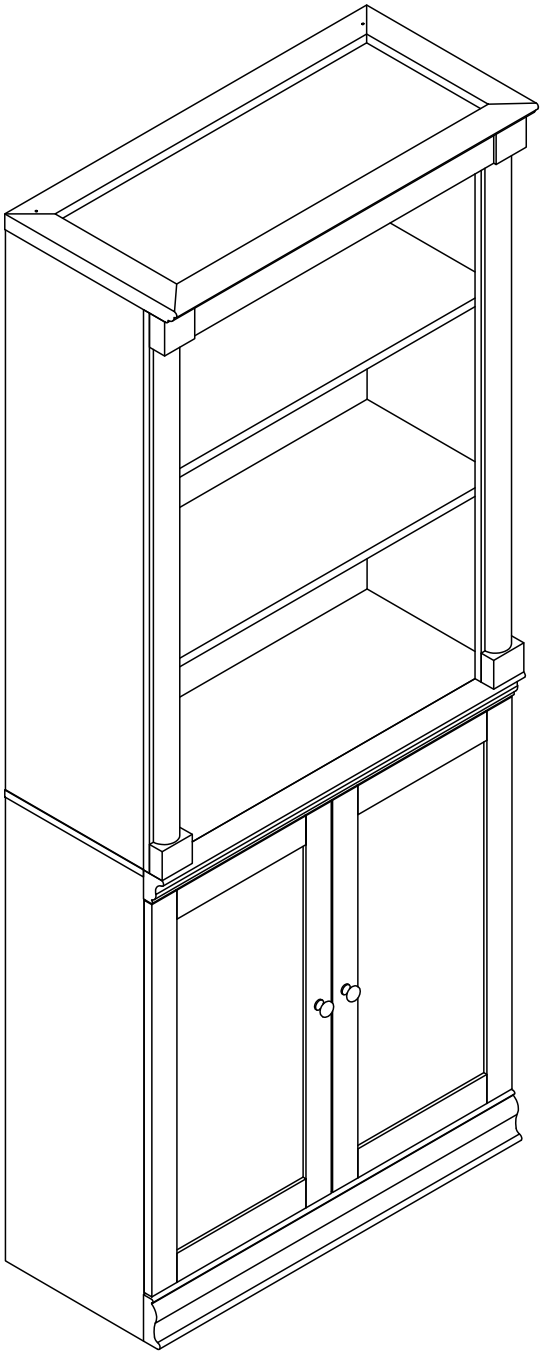

Thank you for purchase on our products. Please contact us if you have difficulty with assembly or need replacement parts. Our customer service is here to assist you.
Please attach your User Name or Order ID so that we can assist you better.

Vielen Dank für Ihren Kauf von uns Produkten. Bitte kontaktieren Sie uns, wenn Sie Probleme mit Montage haben oder Ersatzteile benötigen. Wir Kundenservice ist für Sie da.
Bitte geben Sie Ihren Benutzernamen oder Ihre Bestellnummer an, damit wir Sie besser unterstützen können.

EN

WARNING

Serious or fatal injury may occur from unexpected assembly or use.

1. During the assembly process, keep all parts away from babies or children.
2. Always securely fix this product to the wall. Make sure the wall area to be drilled is free from hidden electrical wires, water and gas pipes.
3. Use of tip-over restraints may only reduce, but not eliminate the risk of tip-over.
4. Unless specially designed to accommodate, do not set heavy objects on top of this product.
5. Place the heaviest items on the lowest shelf.
6. Never allow children to climb or bang on drawers, doors or shelves.

DE

WARNUNG

Bei unerwarteter Montage oder Verwendung können schwere oder tödliche Verletzung auftreten.

1. Legen Sie in den Montageprozess alle Teile weg von Babys oder Kindern.
2. Stellen Sie sicher, dass der gebohrte Wandbereich frei von verborgenen Stromkabeln, Wasser- und Gasleitungen ist, wenn Sie dieses Produkt an der Wand befestigen.
3. Die Verwendung von Kippsicherungen kann die Gefahr eines Kippens nur verringern, jedoch nicht beseitigen.
4. Setzen Sie bitte keine schweren Gegenstände auf dieses Produkt, es sei denn, dass das Produkt speziell für die Unterbringung konzipiert wird.
5. Legen Sie bitte die schwersten Gegenstände auf das unterste Regal.
6. Erlauben Sie nie Kindern, auf Schubladen, Türen oder Regale zu klettern oder zu knallen.

Parts List(EN) / Teile Liste(DE)

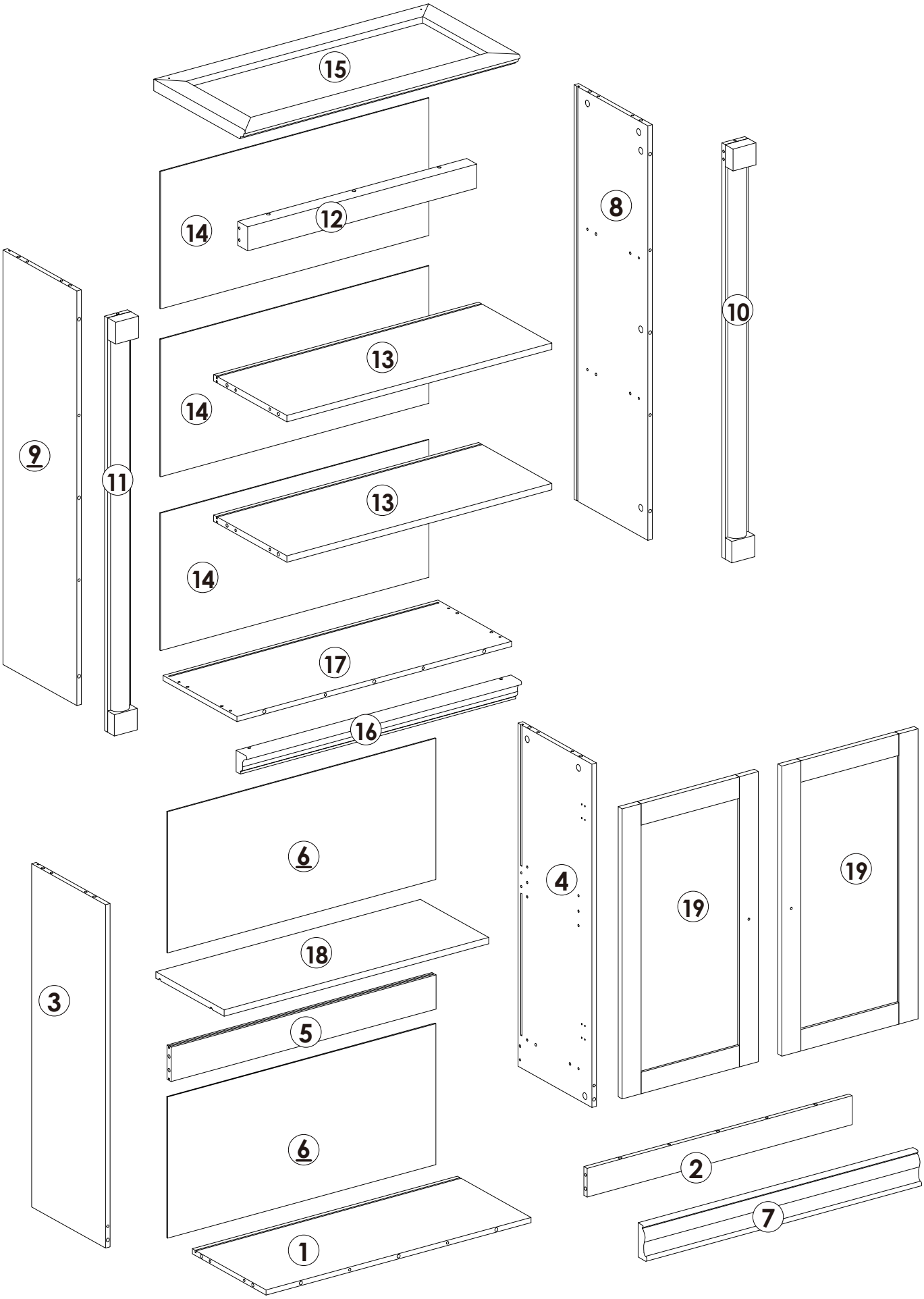

Parts List(EN) / Teile Liste(DE)

A M6×33mm 48+2PCS	**B** Ø15×10mm 48+2PCS	**C** M5×38mm 4PCS
D Ø6×30mm 44+2PCS	**E** 22+2PCS	**F** M3×17mm 22+2PCS
G Ø5×19mm 4PCS	**H** M4×12mm 24+2PCS	**I** 4PCS
J Ø24×21mm 2PCS	**K** M4×16mm 2PCS	**L** Ø21mm 10+1PCS
M M4×38mm 2PCS	**N** 2PCS	**O** M4×16mm 2PCS
P 2PCS		

Assembly Steps(EN) / Montageschritte(DE)

STEP 1

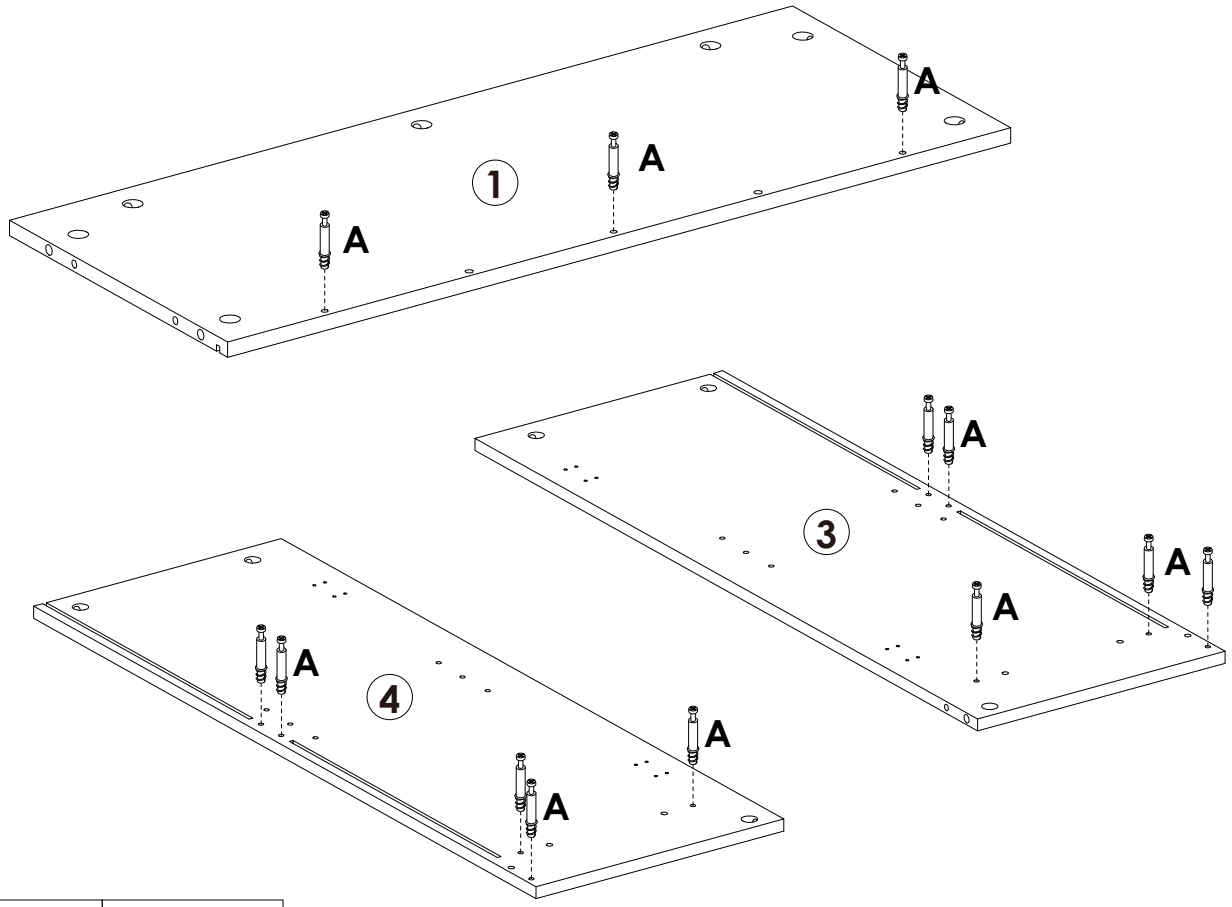

	A x 13PCS

STEP 2

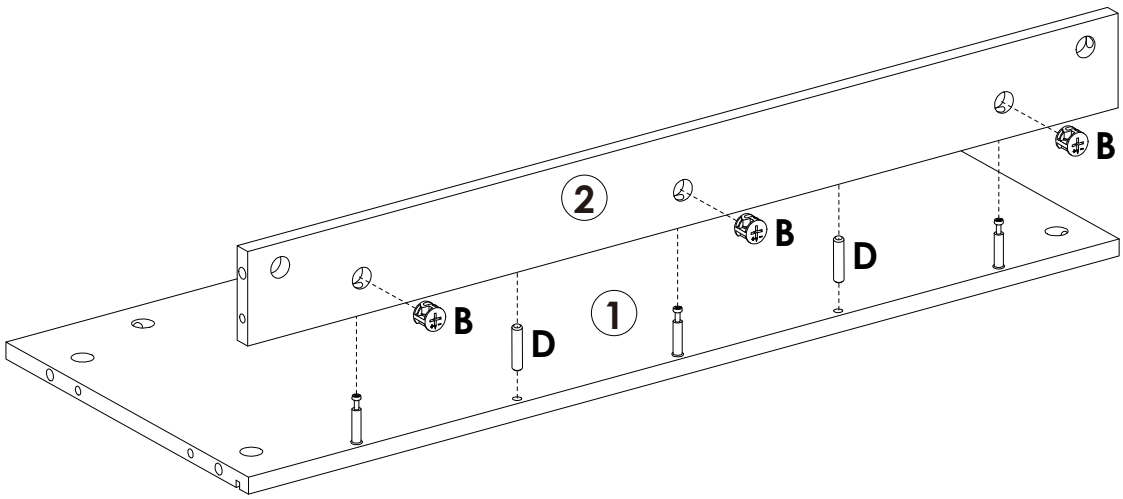

	B x 3PCS
	D x 2PCS

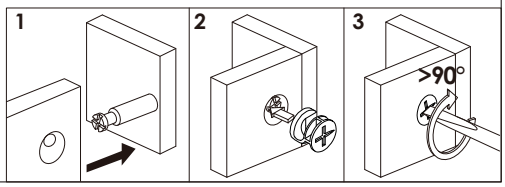

Assembly Steps(EN) / Montageschritte(DE)

STEP 3

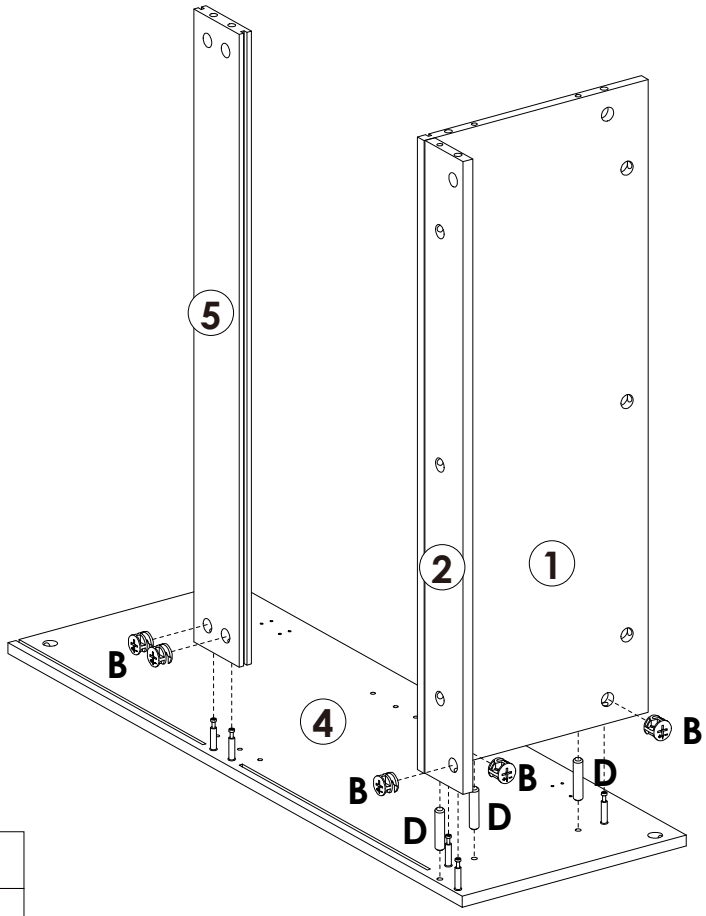

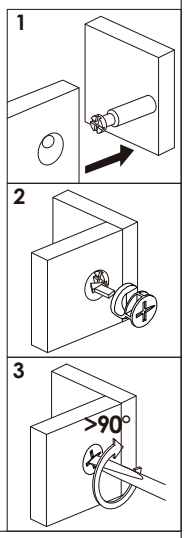

	B x 5PCS
	D x 3PCS

STEP 4

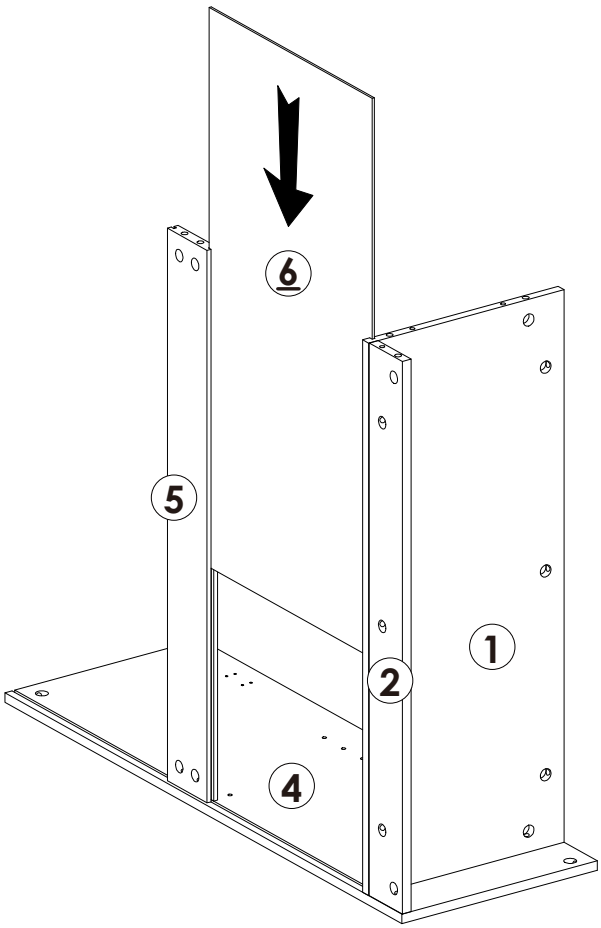

Assembly Steps(EN) / Montageschritte(DE)

STEP 5

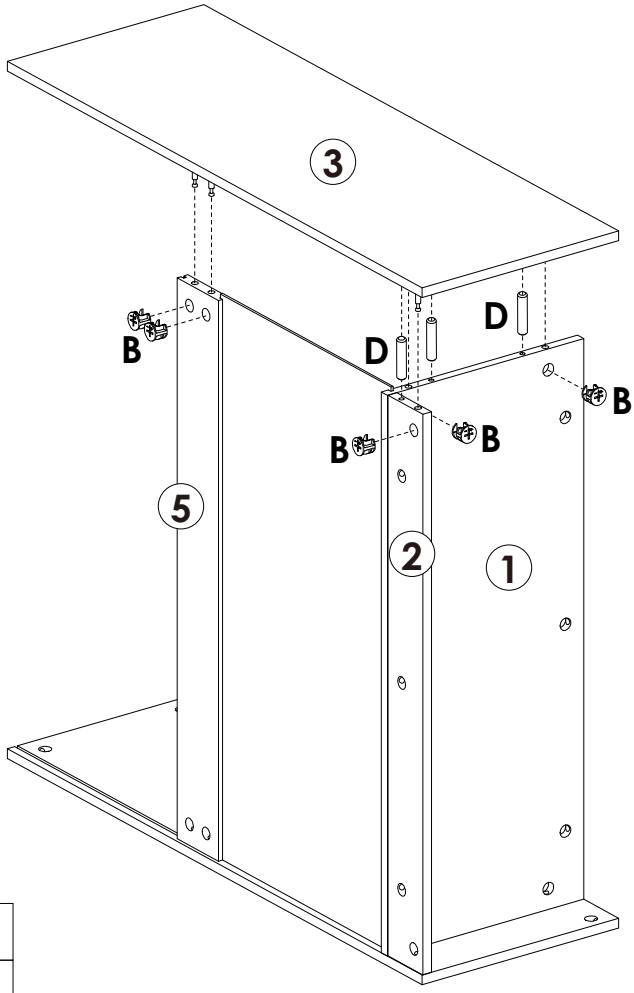

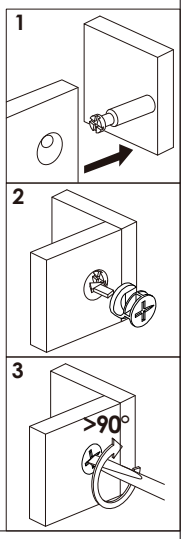

	B x 5PCS
	D x 3PCS

STEP 6

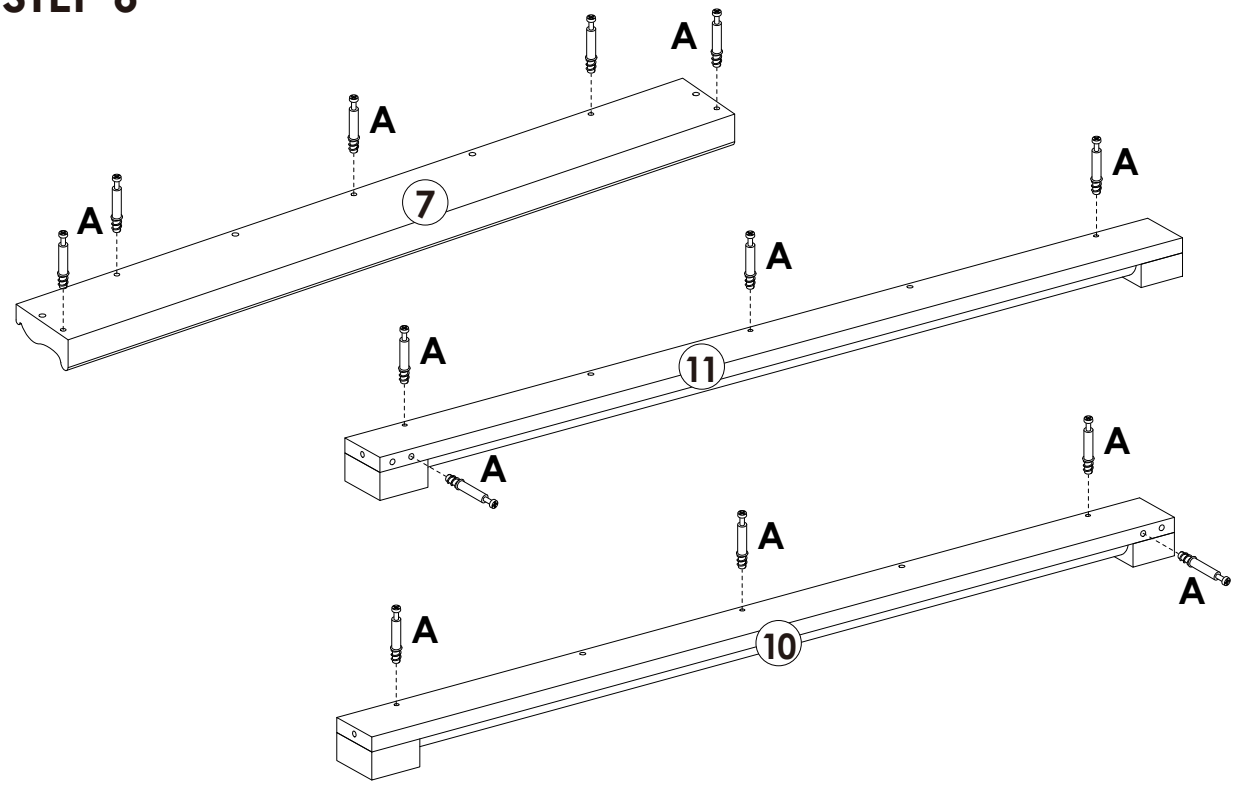

	A x 13PCS

Assembly Steps(EN) / Montageschritte(DE)

STEP 7

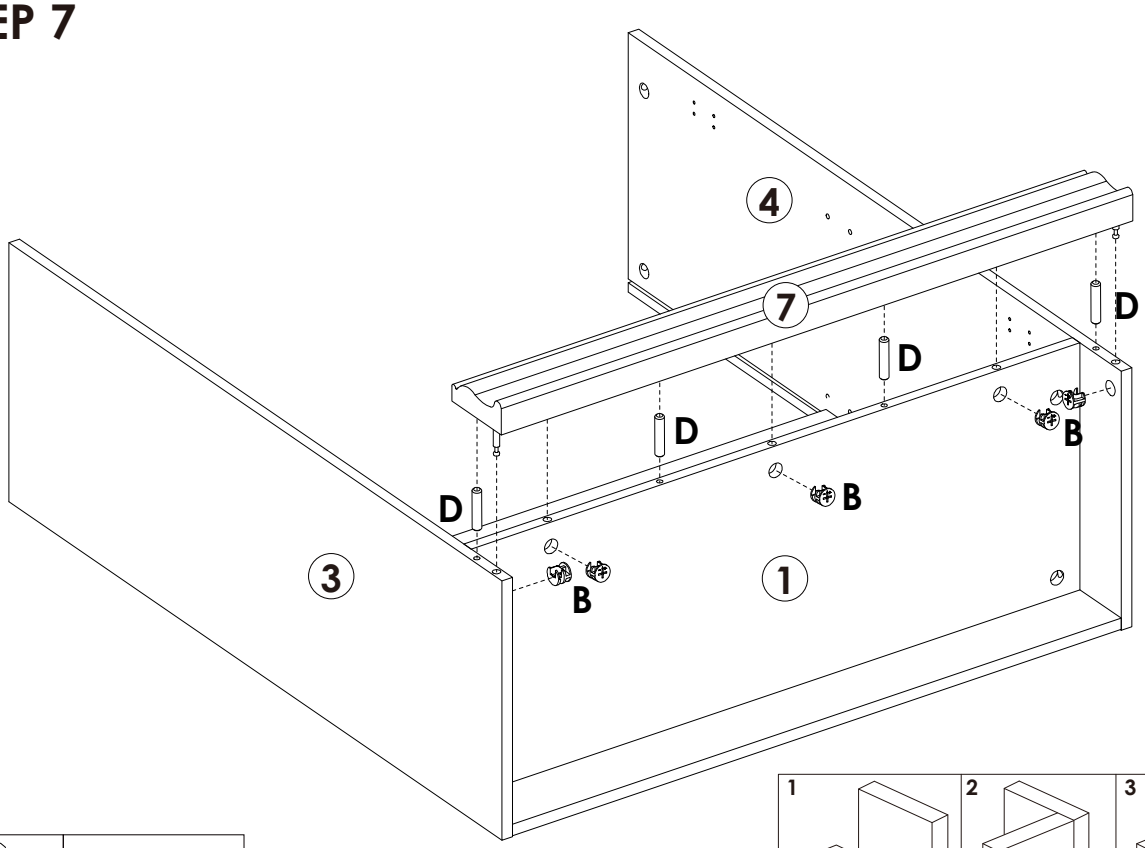

	B x 5PCS
	D x 4PCS

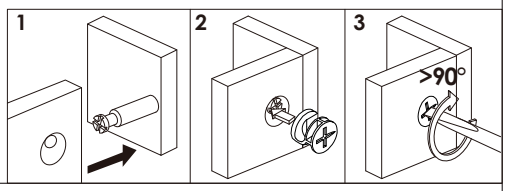

STEP 8

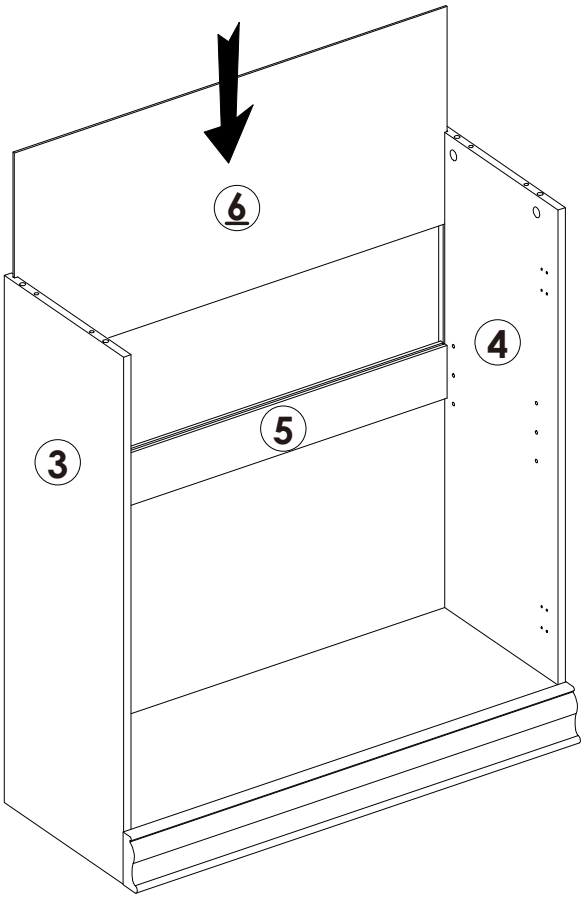

Assembly Steps(EN) / Montageschritte(DE)

STEP 9

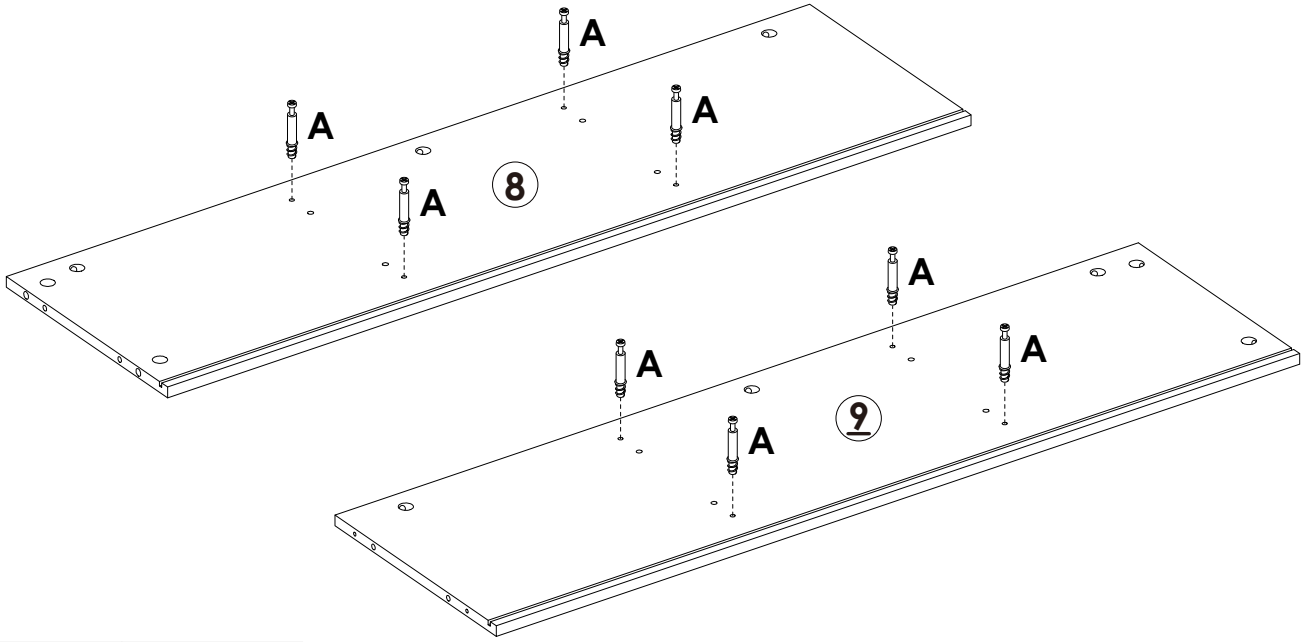

	A x 8PCS

STEP 10

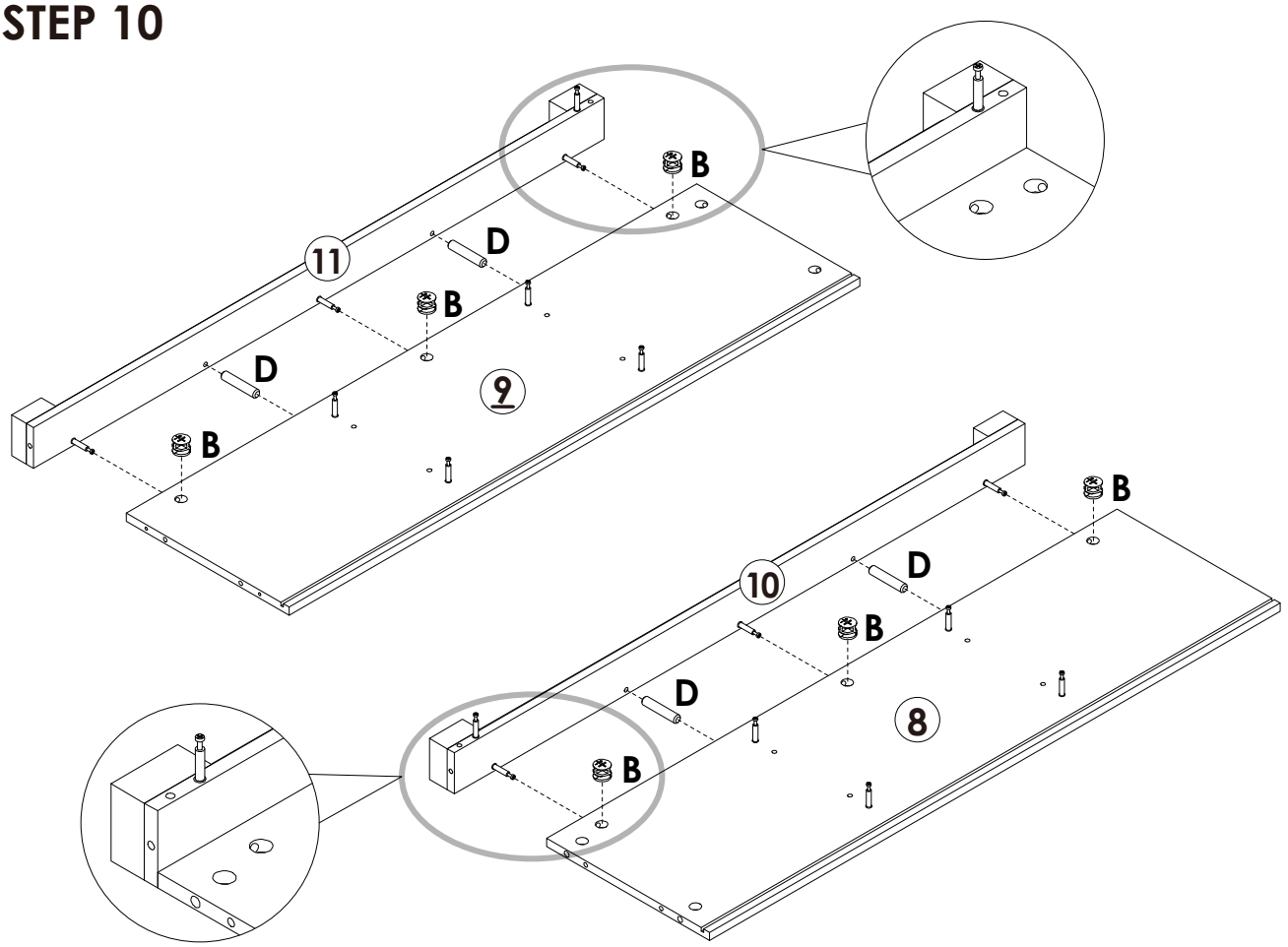

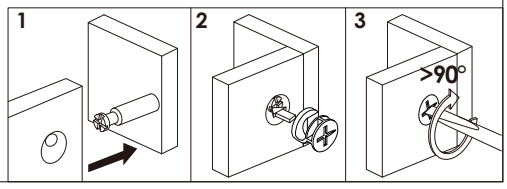

	B x 6PCS
	D x 4PCS

Assembly Steps(EN) / Montageschritte(DE)

STEP 11

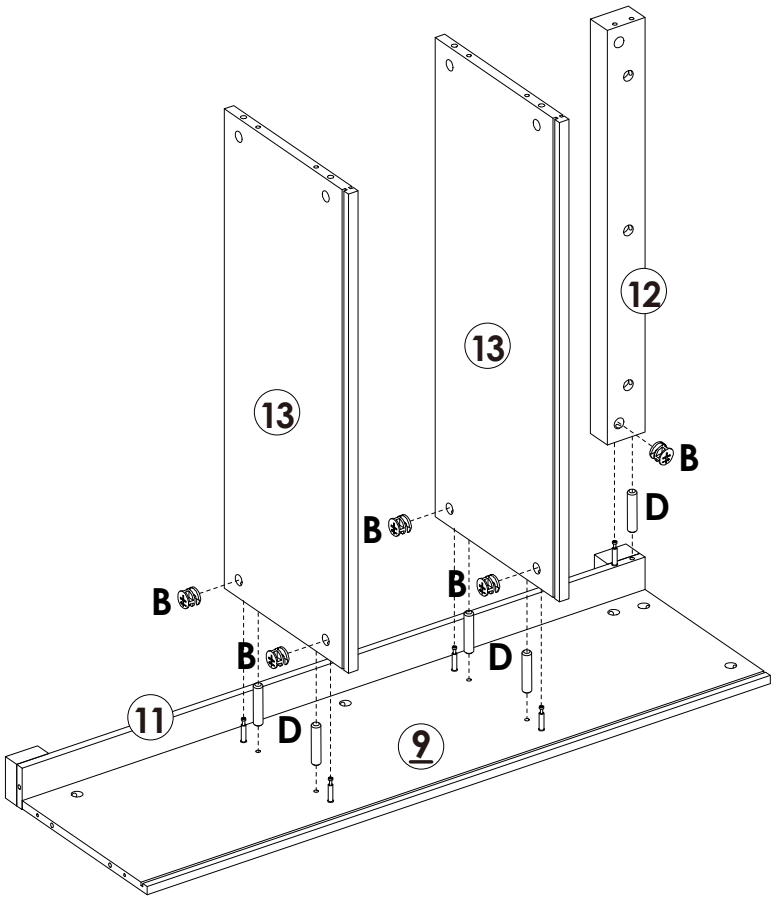

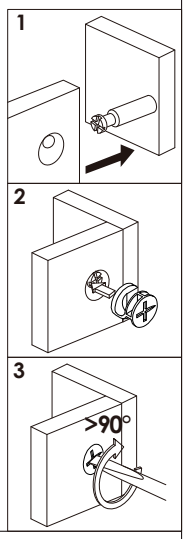

	B x 5PCS
	D x 5PCS

STEP 12

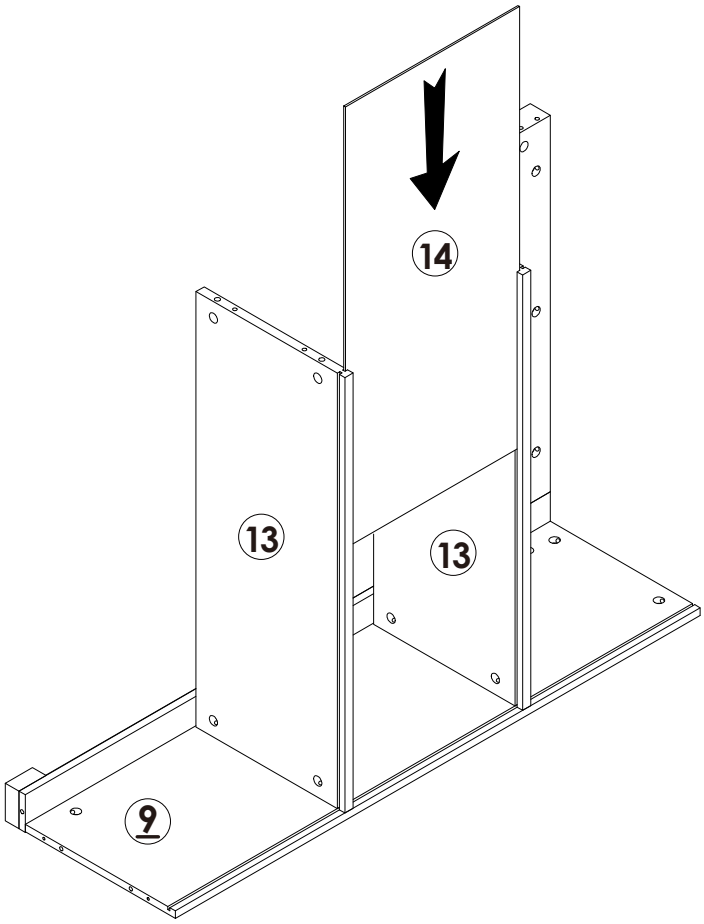

Assembly Steps(EN) / Montageschritte(DE)

STEP 13

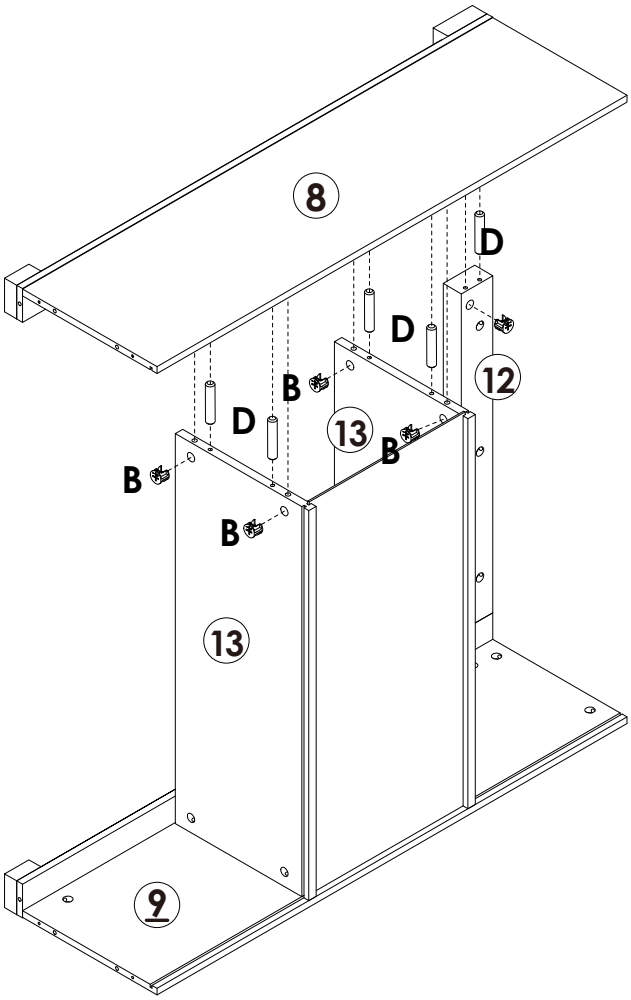

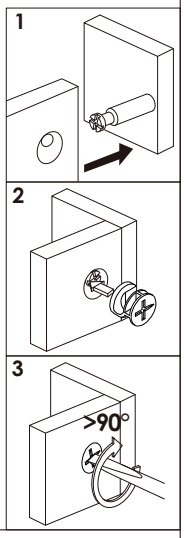

	B x 5PCS
	D x 5PCS

STEP 14

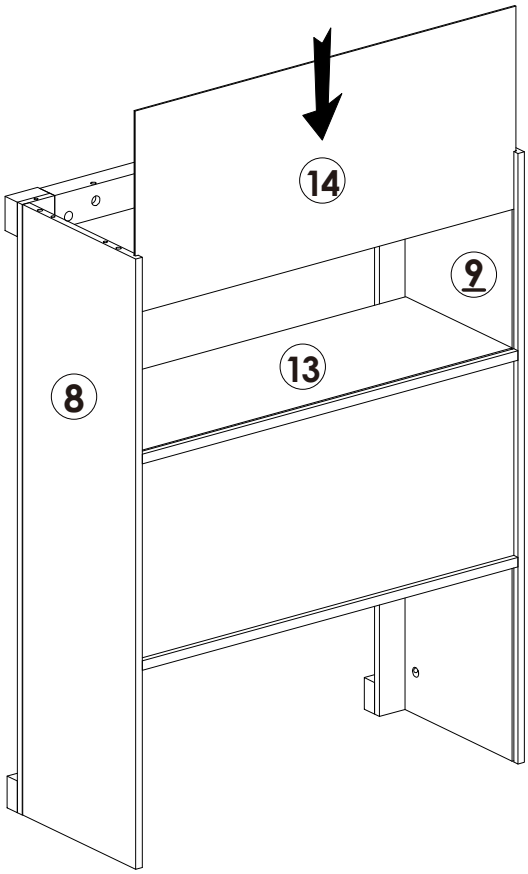

Assembly Steps(EN) / Montageschritte(DE)

STEP 15

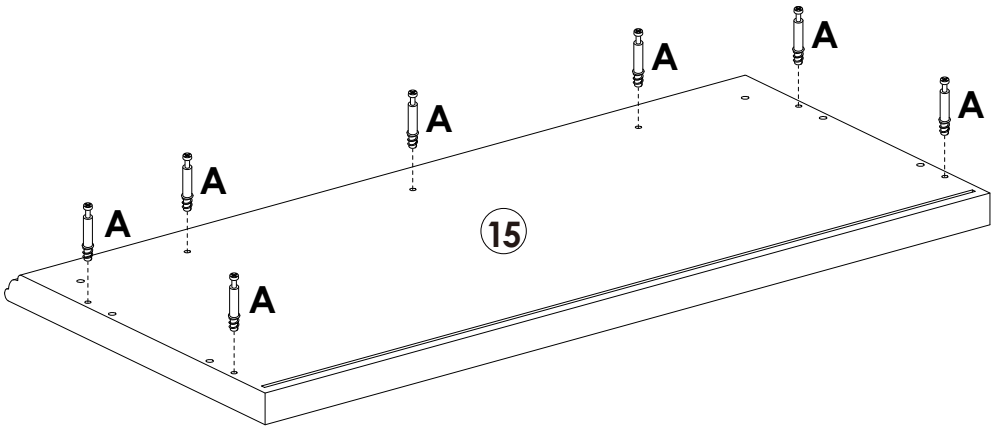

	A x 7PCS

STEP 16

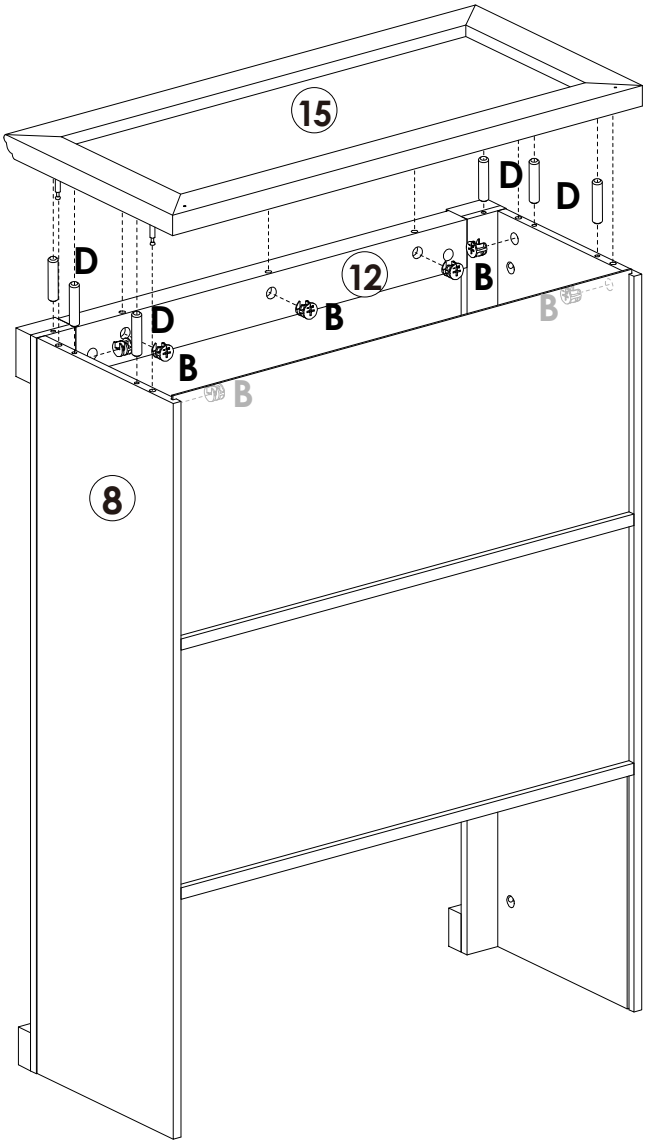

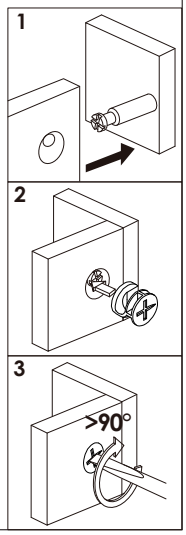

	B x 7PCS
	D x 6PCS

Assembly Steps(EN) / Montageschritte(DE)

STEP 17

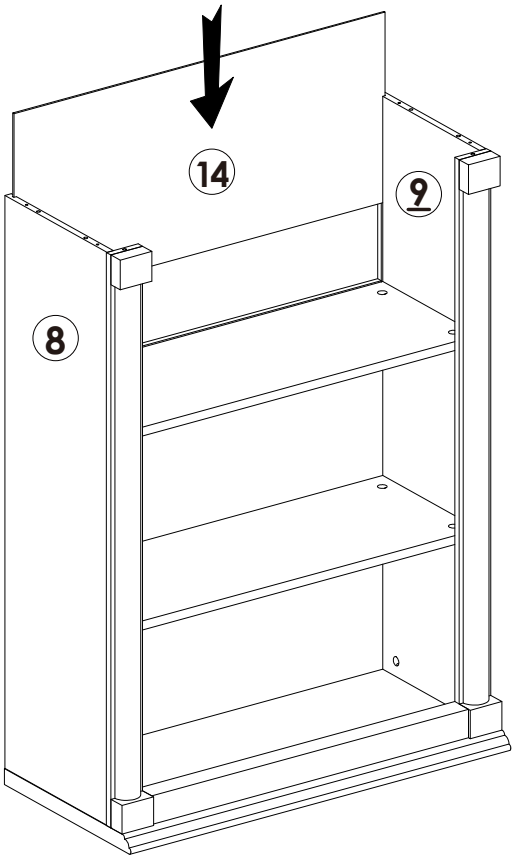

STEP 18

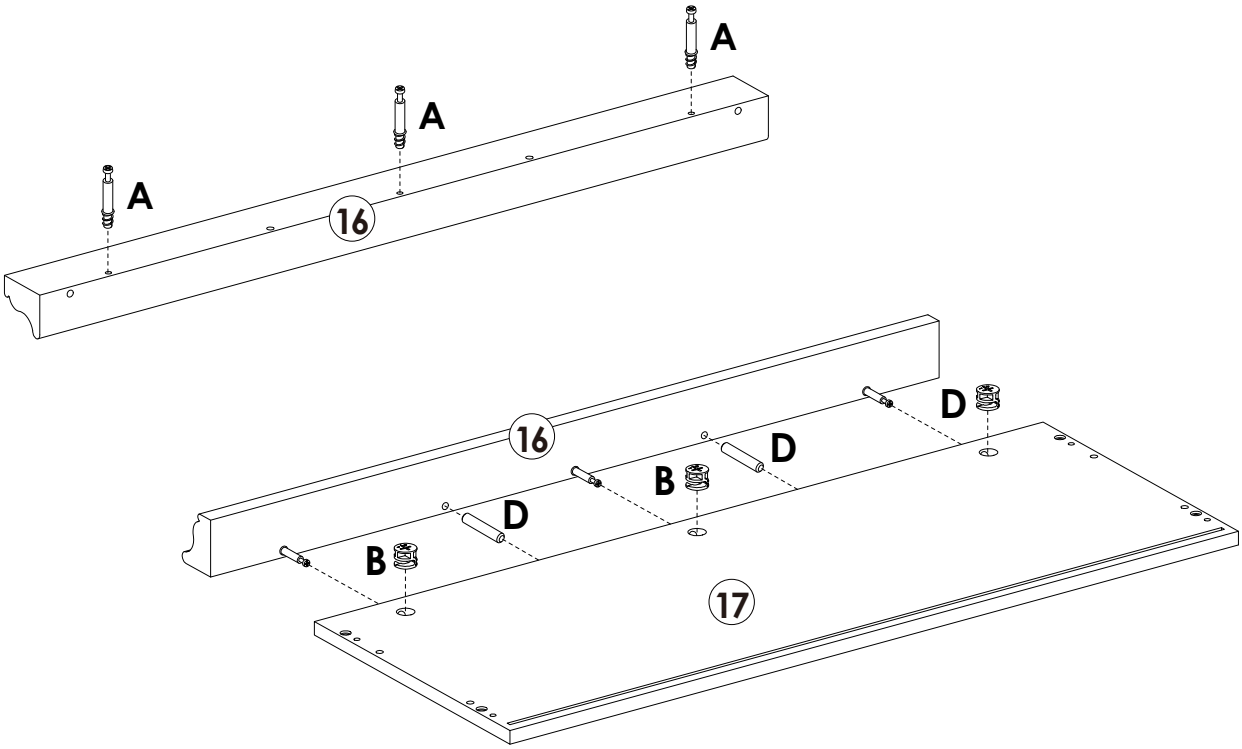

	A x 3PCS
	B x 3PCS
	D x 2PCS

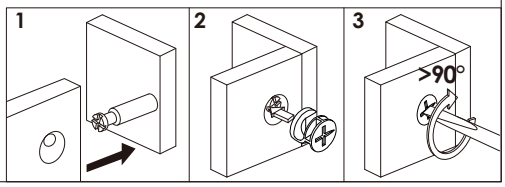

Assembly Steps(EN) / Montageschritte(DE)

STEP 19

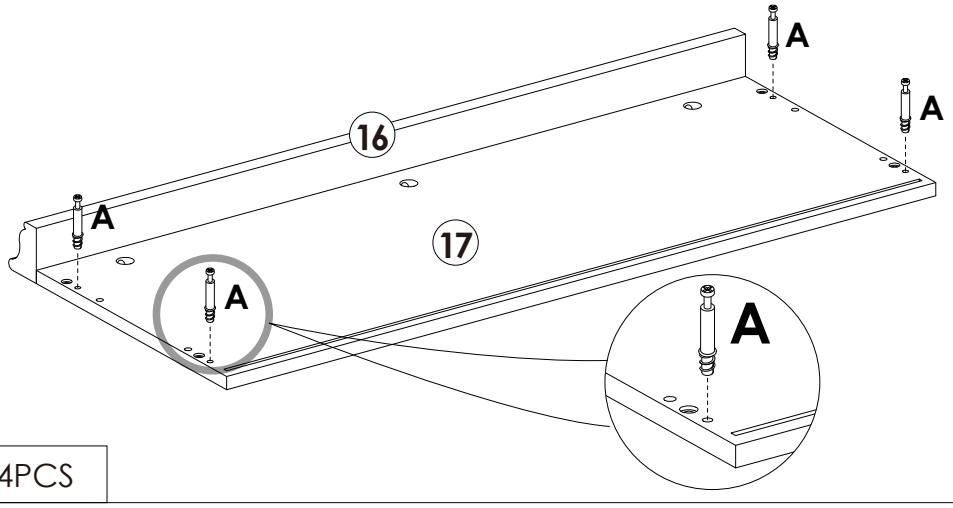

	A x 4PCS

STEP 20

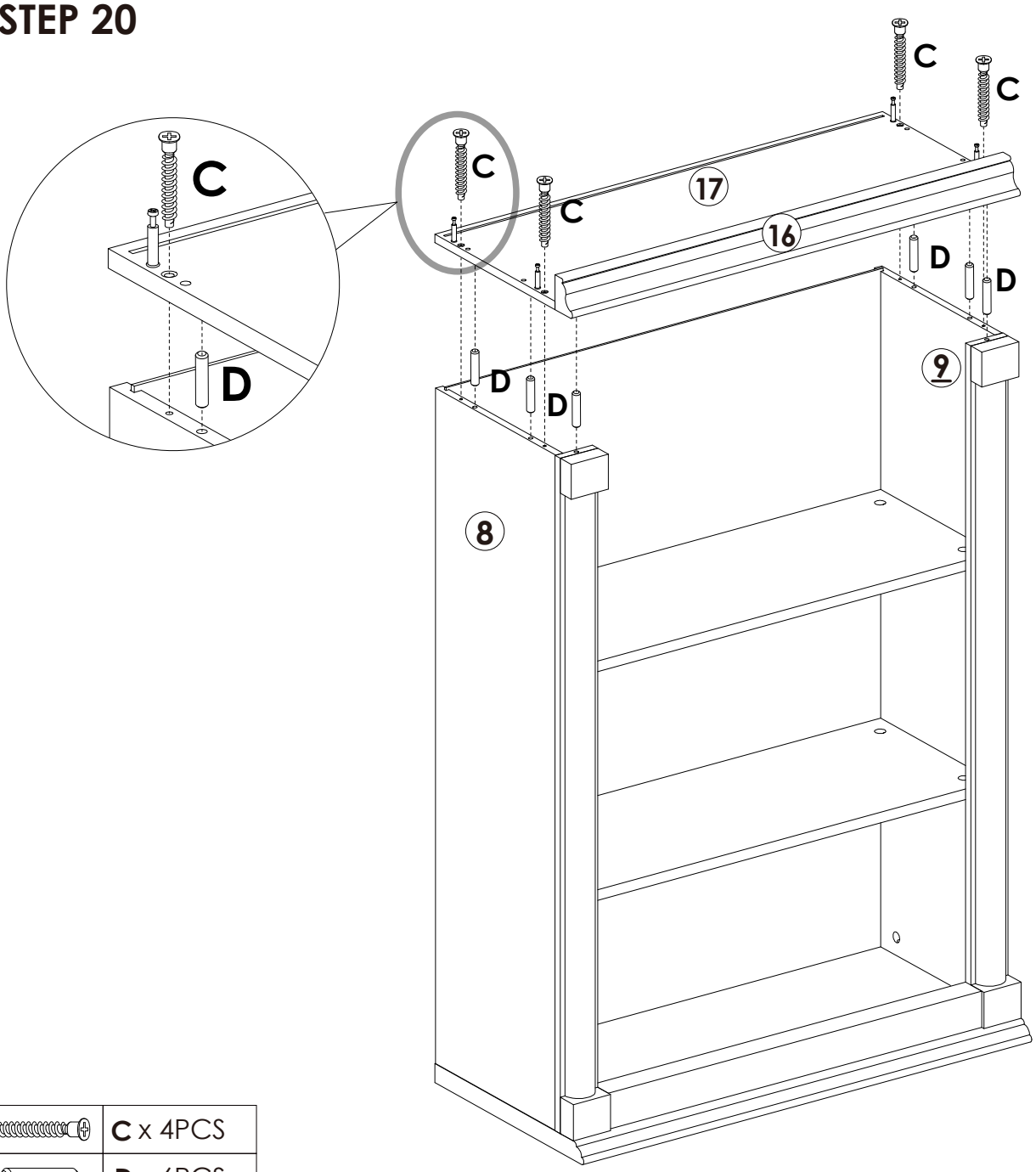

	C x 4PCS
	D x 6PCS

STEP 21

9

17

D

D

B

B

B

B

4

3

	B x 4PCS
	D x 4PCS

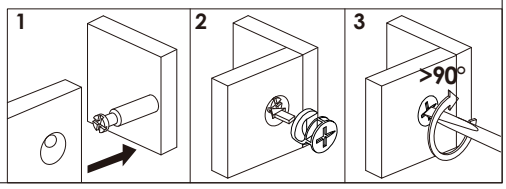

STEP 22

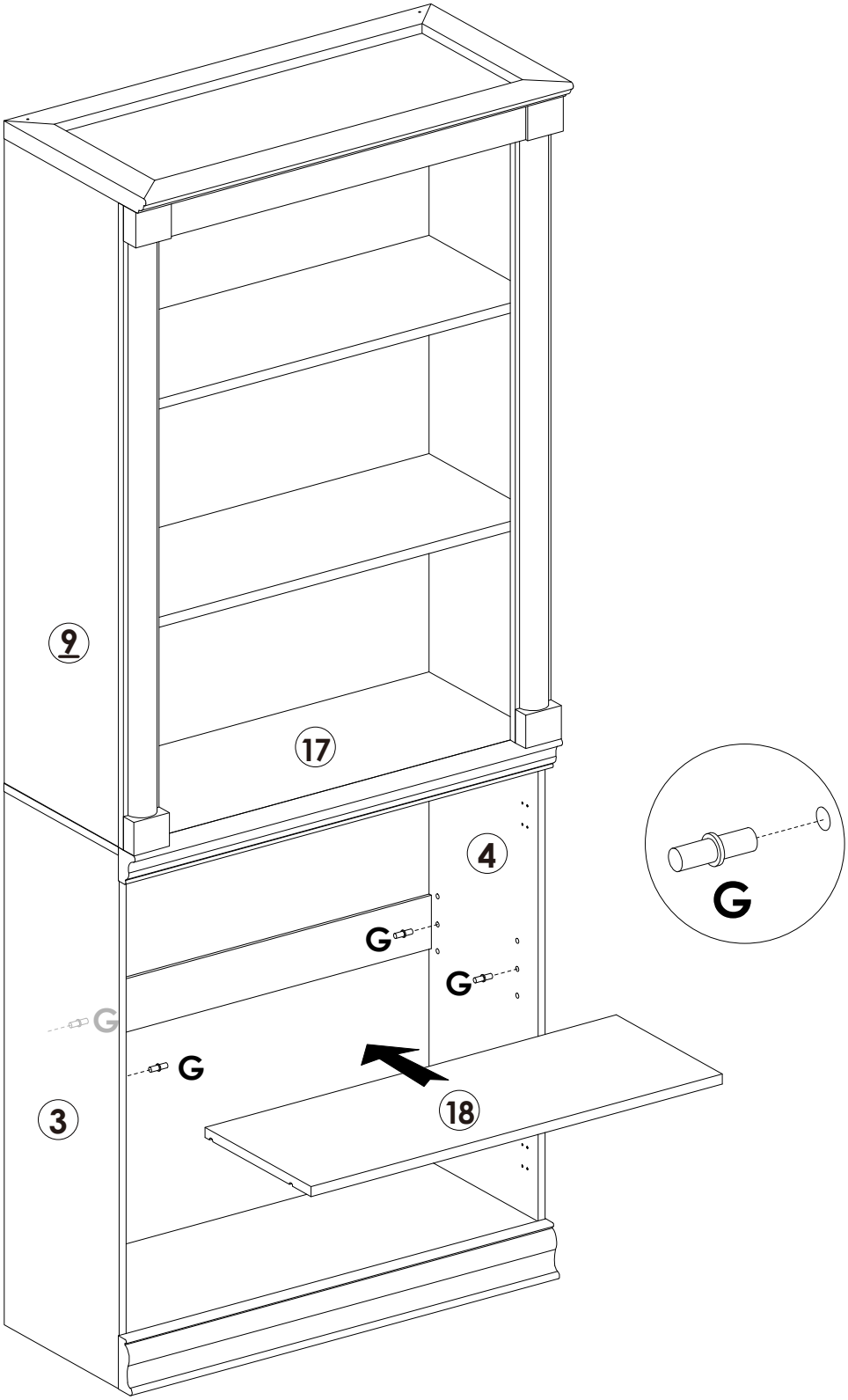

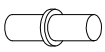	**G** x 4PCS

Assembly Steps(EN) / Montageschritte(DE)

STEP 23

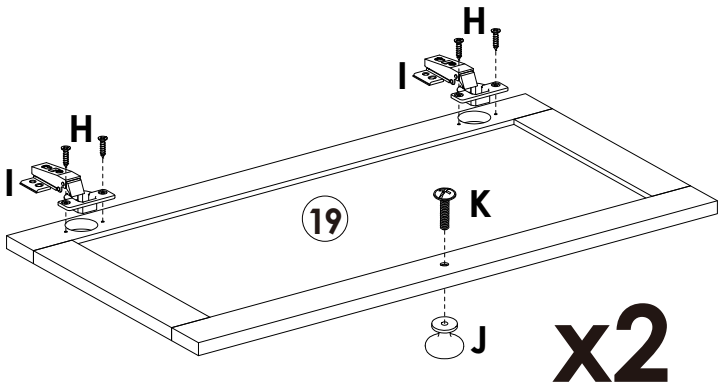

	H x 8PCS
	I x 4PCS
	J x 2PCS
	K x 2PCS

STEP 24

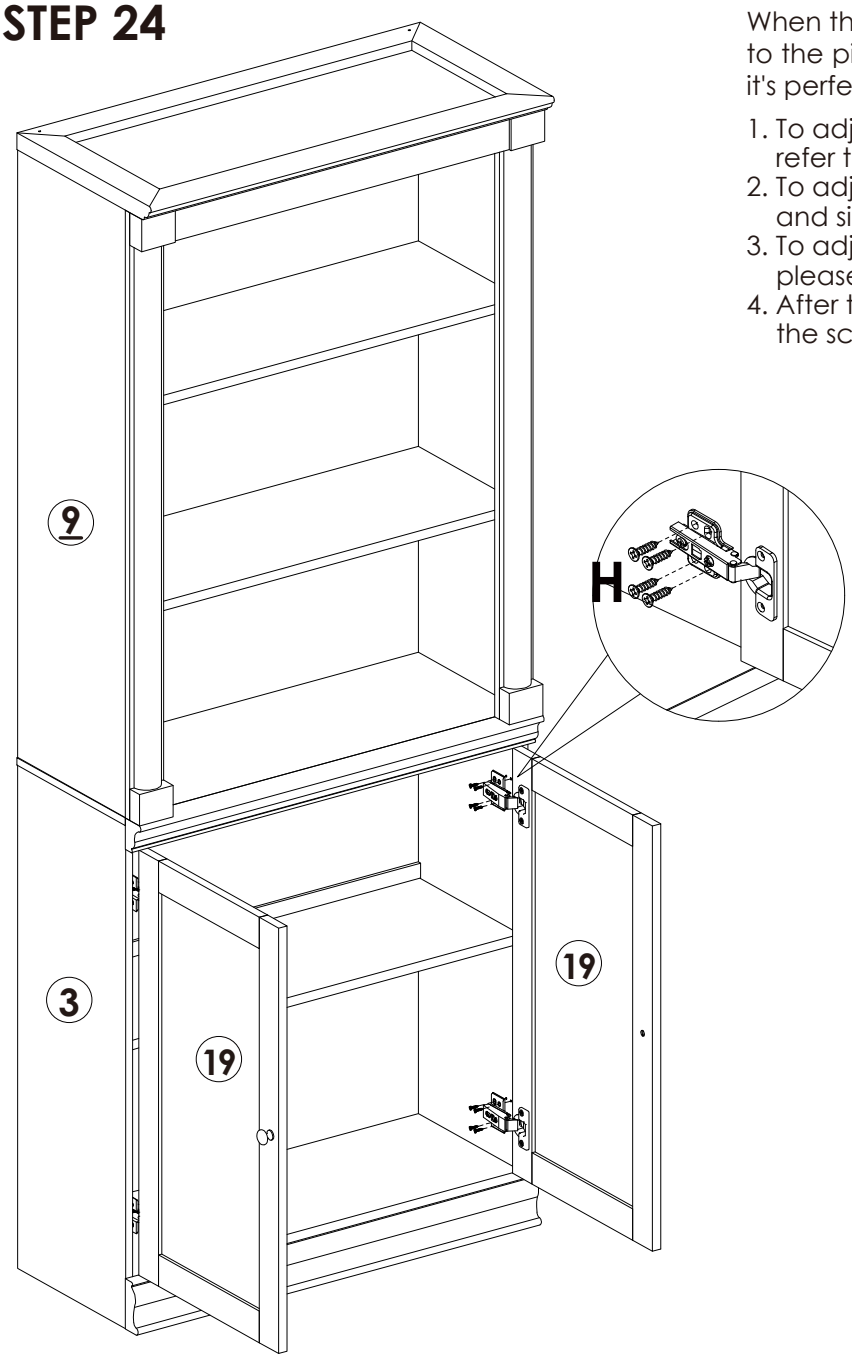

When the hinges are installed, you can refer to the pictures to adjust gap of the doors till it's perfect:

1. To adjust the doors up and down, please refer to step (a)
2. To adjust the distance between the doors and side panels, please refer to step(b)
3. To adjust the gap between two doors, please refer to step (c)
4. After the adjustment finished, please tight the screws, refer to step (d)

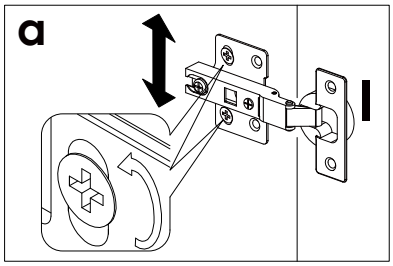

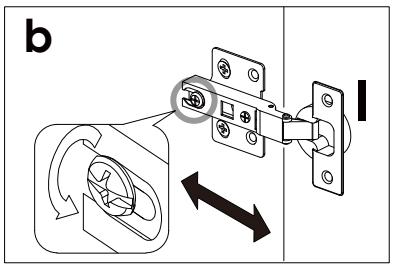

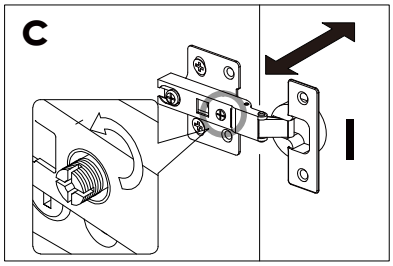

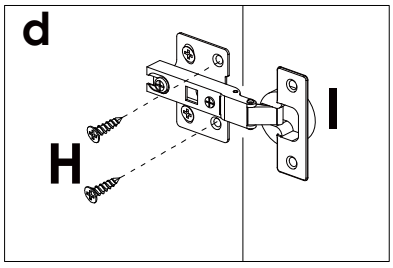

	H x 16PCS

STEP 25

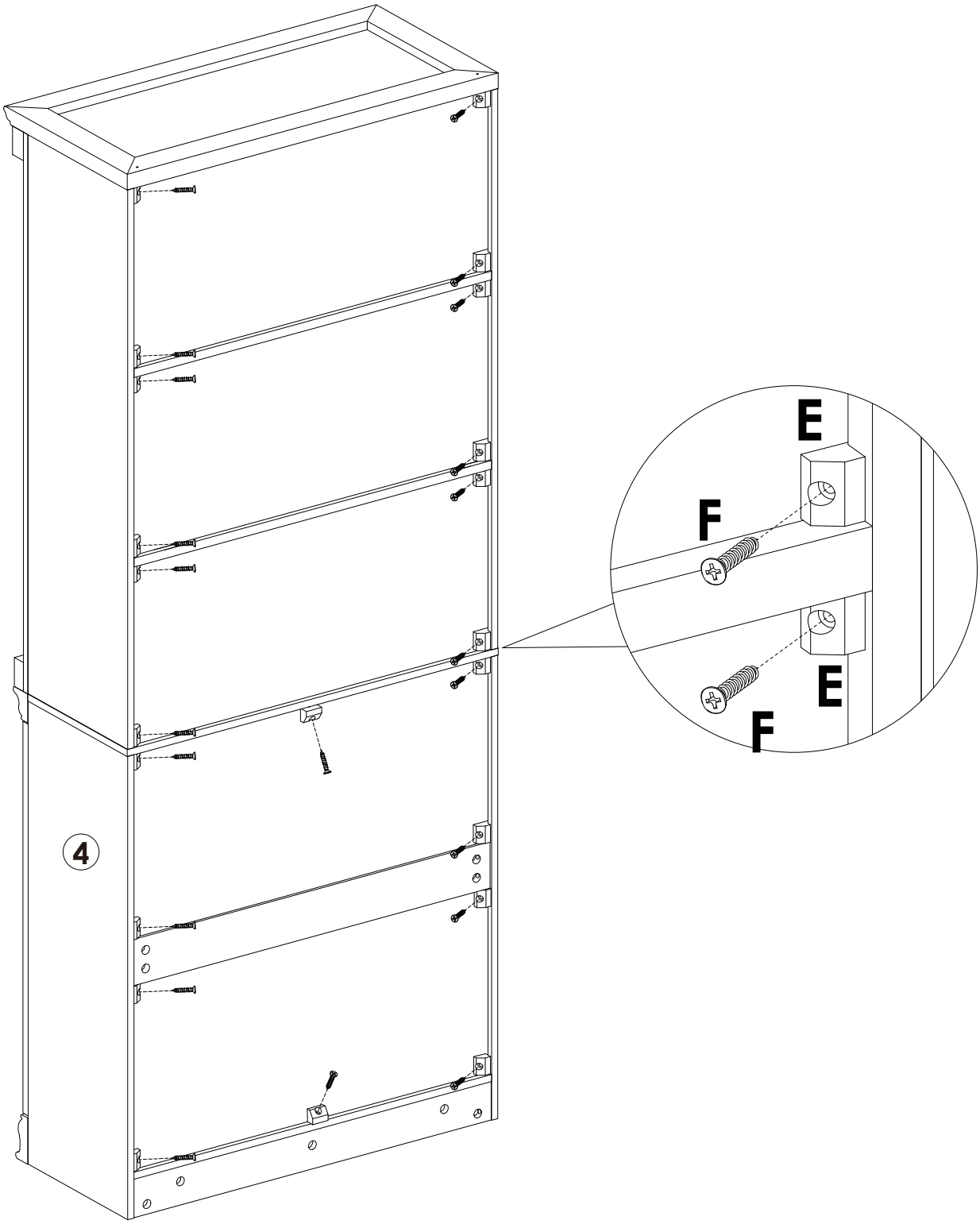

	E x 22PCS
	F x 22PCS

Assembly Steps(EN) / Montageschritte(DE)

STEP 26

Lock the long side of the "**N**" L-shaped metal plate to the ⑮ board with the "**O**" short screw

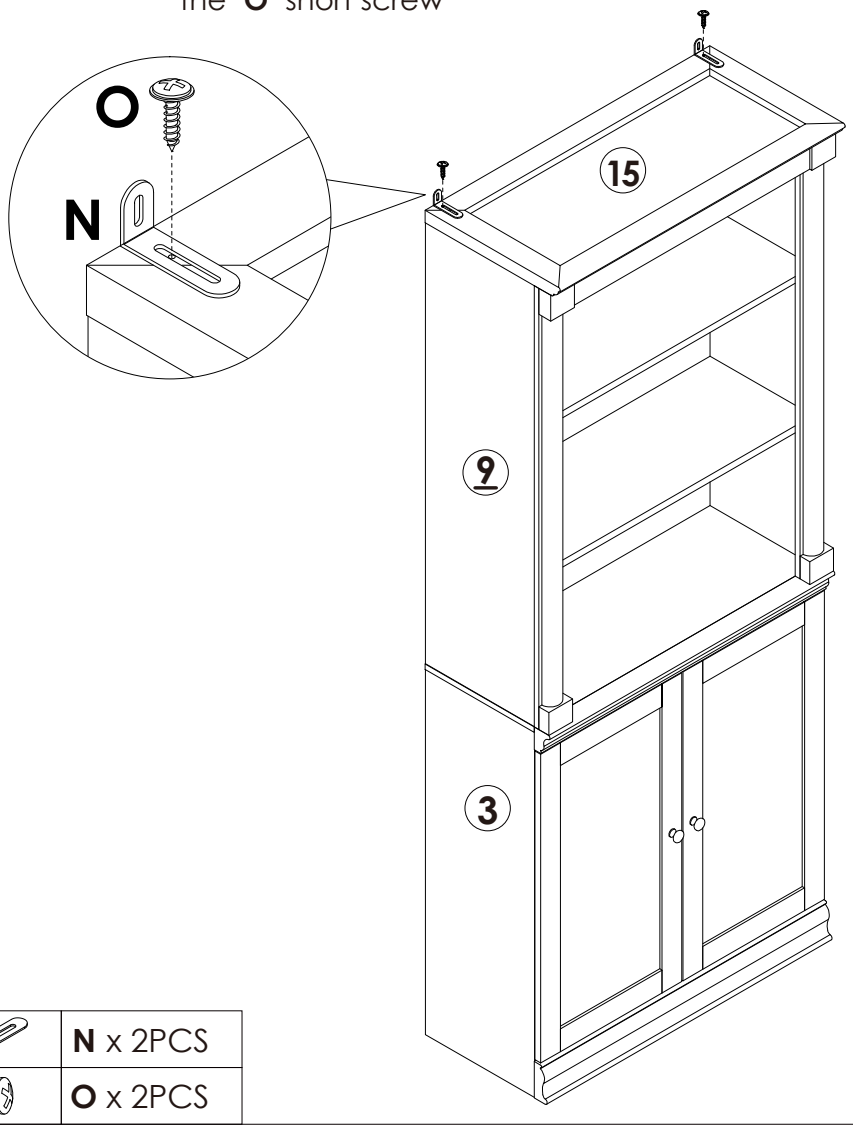

	N x 2PCS
	O x 2PCS

STEP 27

Drill 2 holes on the wall at the required position for anti-falling device installation.

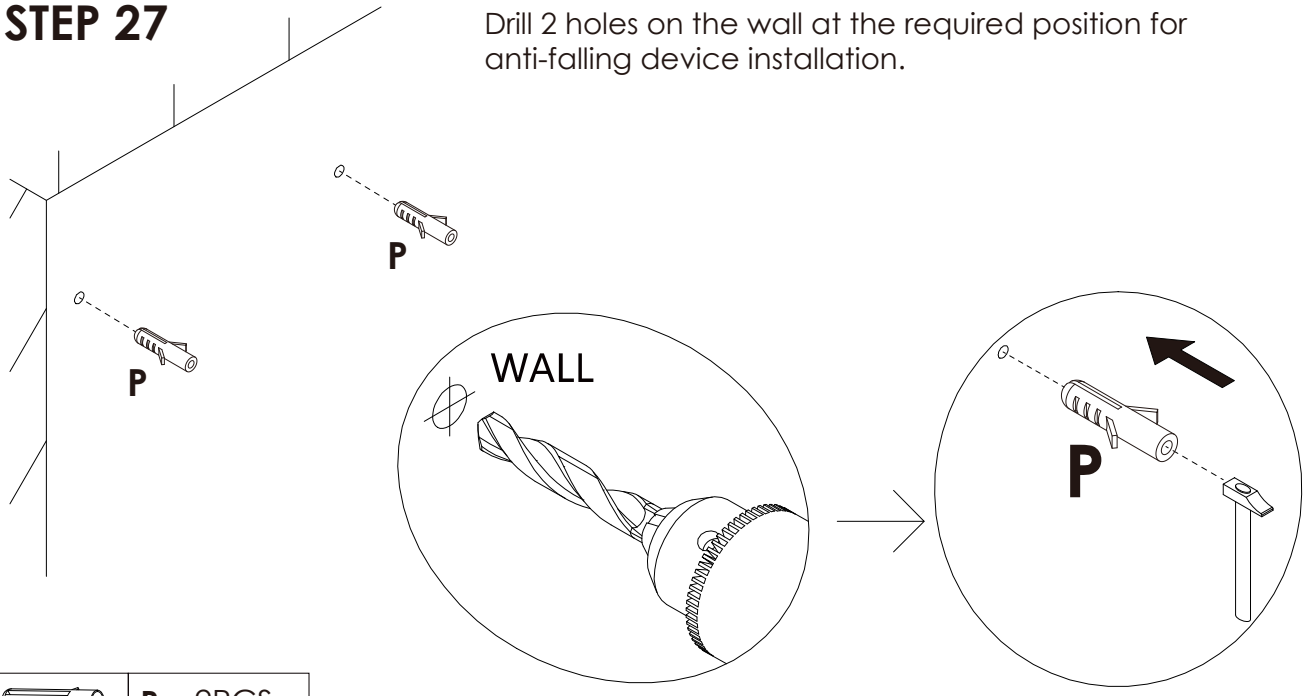

	P x 2PCS

STEP 28

Move the cabinet to the required position, use the "**M**" long screw to fix the cabinet to the wall.

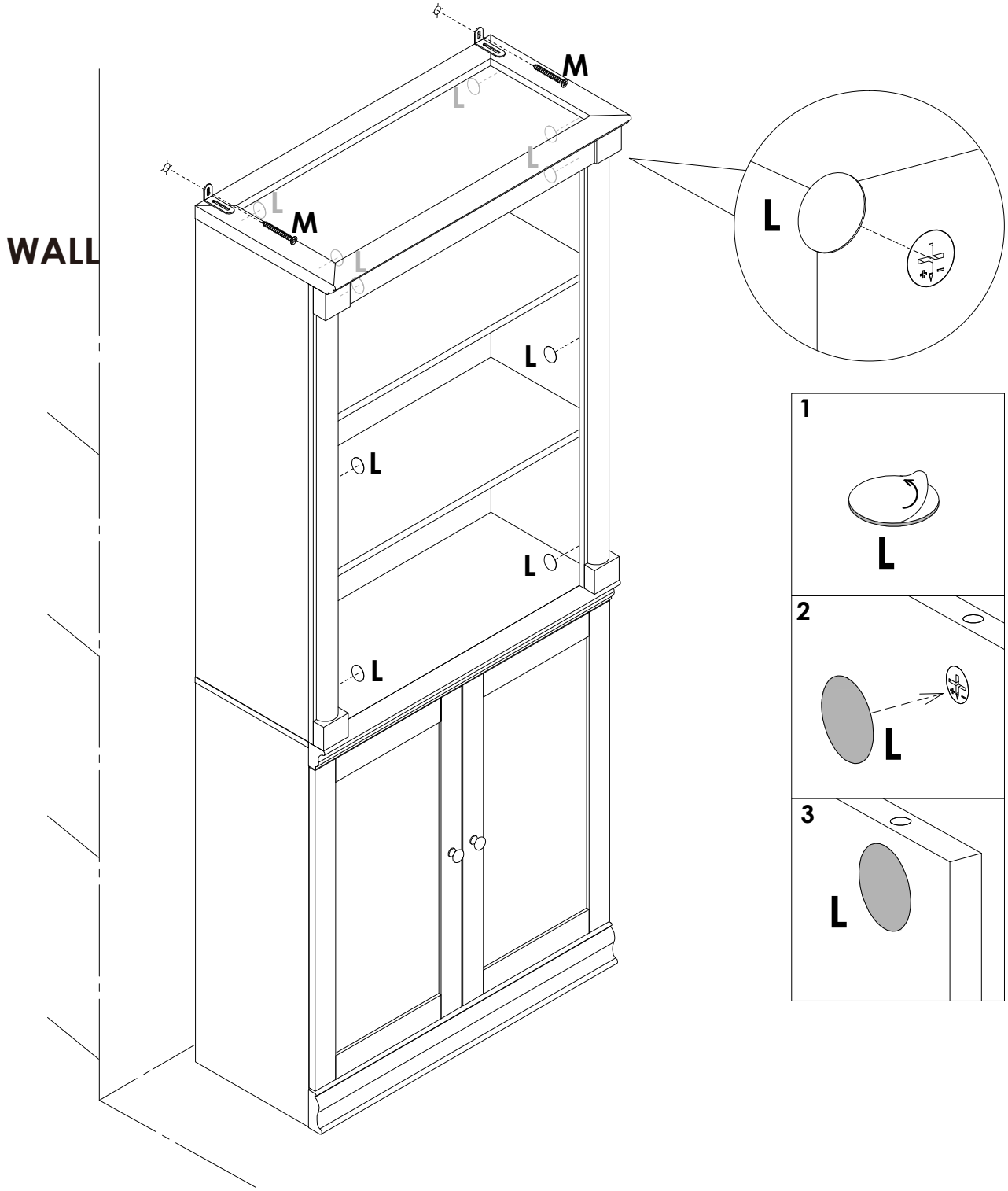

	M x 2PCS
	L x 10PCS

The ways to adjust the door

- Before adjusting the hinge, please check whether the cabinet is skewed.
- If the skew can not be repaired, please remove the anti-tipping device first, then adjust the cabinet to vertical position.
- Please adjust the hinge with the door open.
- Please operate it with more than 2 people, one person holds the door and the other one adjusts the screw.

Components Name

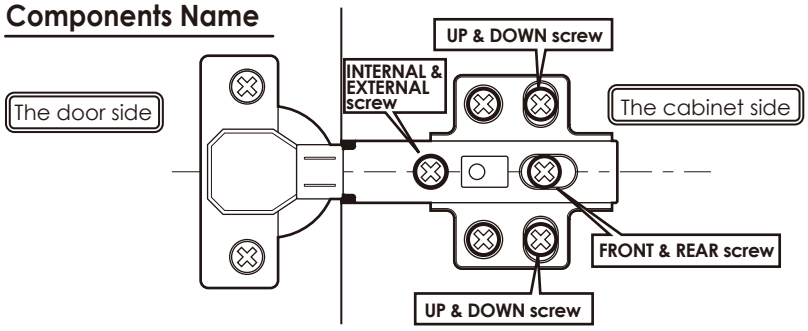

Obvious gaps between doors or Doors don't look closed

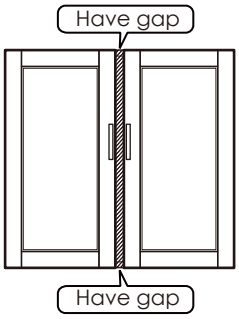

1 Turn "internal & external screw" to the right can make the door approach inside. Please adjust the doors little by little.

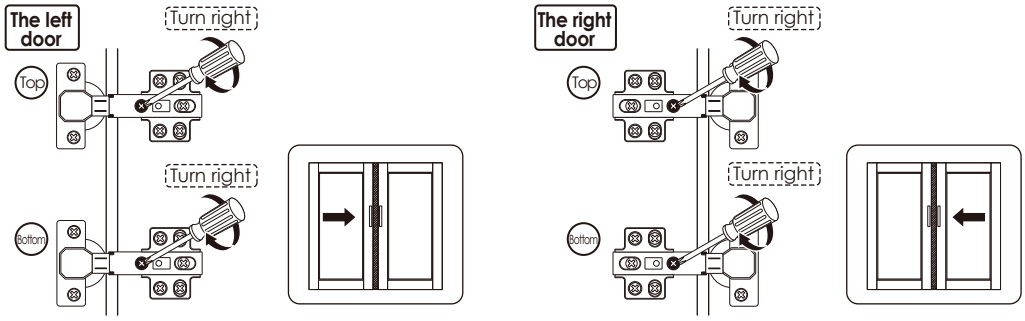

※ **If the 2 doors are overlap, please turn the "internal & external screw" to the left.**

When door is crooked

Please take the following steps to adjust first.

1 Rotate the "front and rear screws" to the left

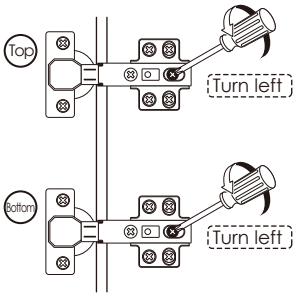

※ **After adjusting the "front and rear screw", the door still does not change, please turn the "internal & external screw" to the right Slightly.**

2 Push the door to the cabinet

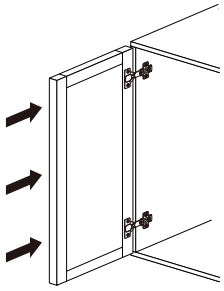

3 Rotate the "front and rear screws" to the right

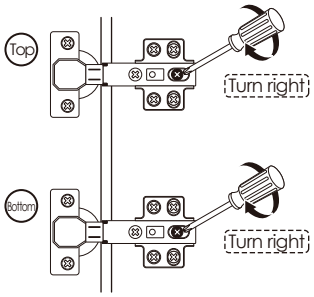

When door is leaning

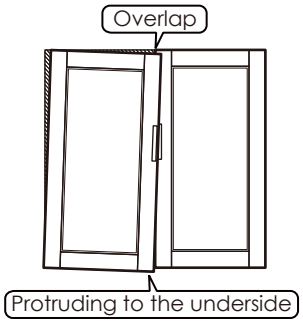

1 Turn "internal & external screw" to the left can make the top of the door tilted outward.

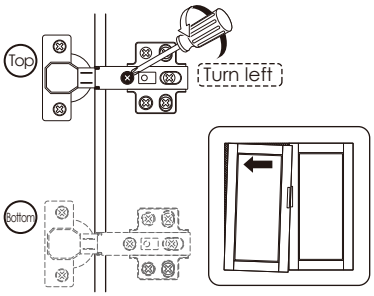

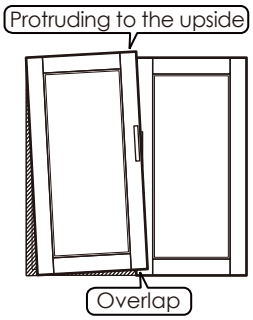

1 Turn "internal & external screw" to the left can make the bottom of the door tilted outward.

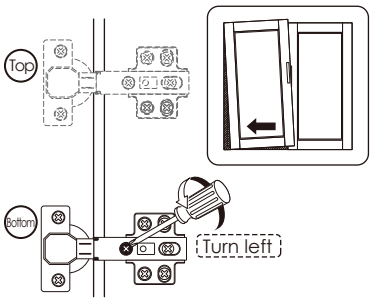

When the door is higher on top

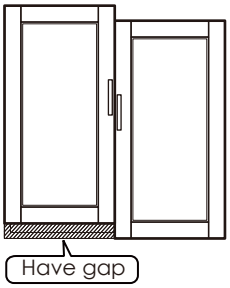

1 Turn "up & down screw" to the left

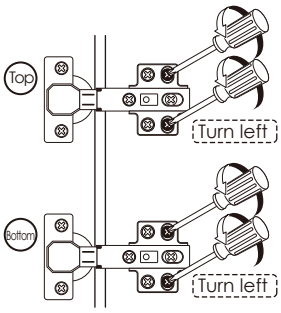

2 Lower the door's height so that 2 doors are of the same height.

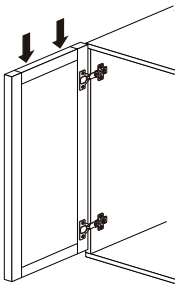

3 Turn "up & down screw" to the right

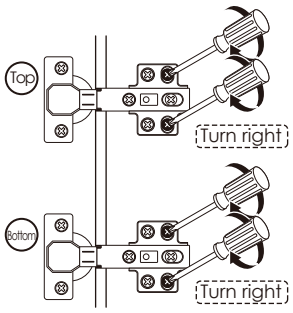

※ **If the door is lower on bottom, please lift up the left door slightly on step 2**

⚠ WARNING

Children have died from furniture tipover. To reduce the risk of furniture tipover:

- **ALWAYS install Anti-tip device provided.**
- **NEVER put a TV on this product.**
- **NEVER allow children to stand, climb or hang on any drawers, doors, or shelves.**
- **NEVER open more than one drawer at a time.**
- **Place heaviest items in the lowest drawers.**

This is a permanent label. Do not remove!

Made in China