TEAR SHEET

Talia 29" Semi-Flush Mount

Item # JN 4111G/CG

Designer: Julie Neill



Height: 28"
Width: 29.25"
Canopy: 6" Round
Finishes: BSL/CG, G/CG, PW/CG
Glass Options: CG
Socket: 6 - E12 Candelabra
Wattage: 6 - 6.5 LED B11
Weight: 26 Pounds
Note: Assembly Required

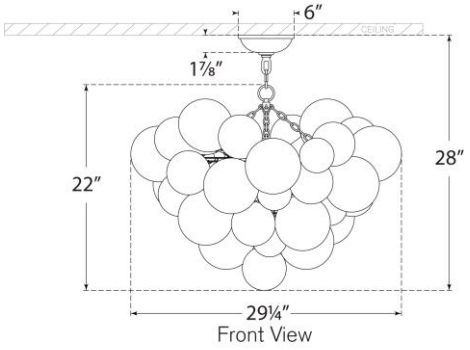

Front View

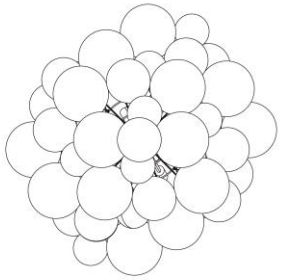
Bottom View

VISUAL COMFORT & CO.