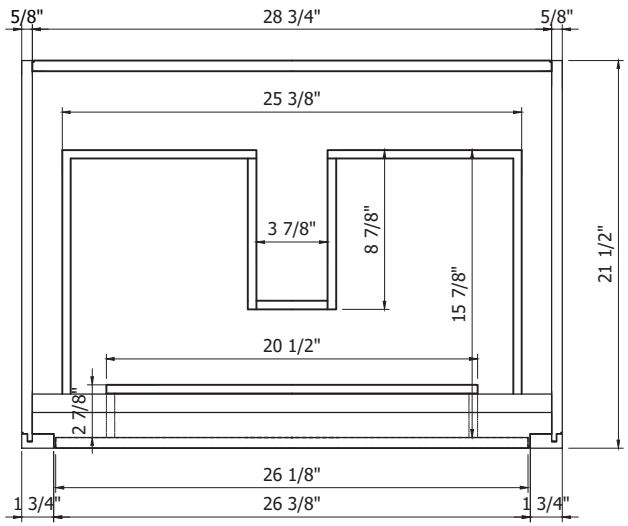
5/8"
28 3/4"
5/8"
25 3/8"
3 7/8"
8 7/8"
15 7/8"
21 1/2"
20 1/2"
2 7/8"
26 1/8"
1 3/4"
26 3/8"
1 3/4"

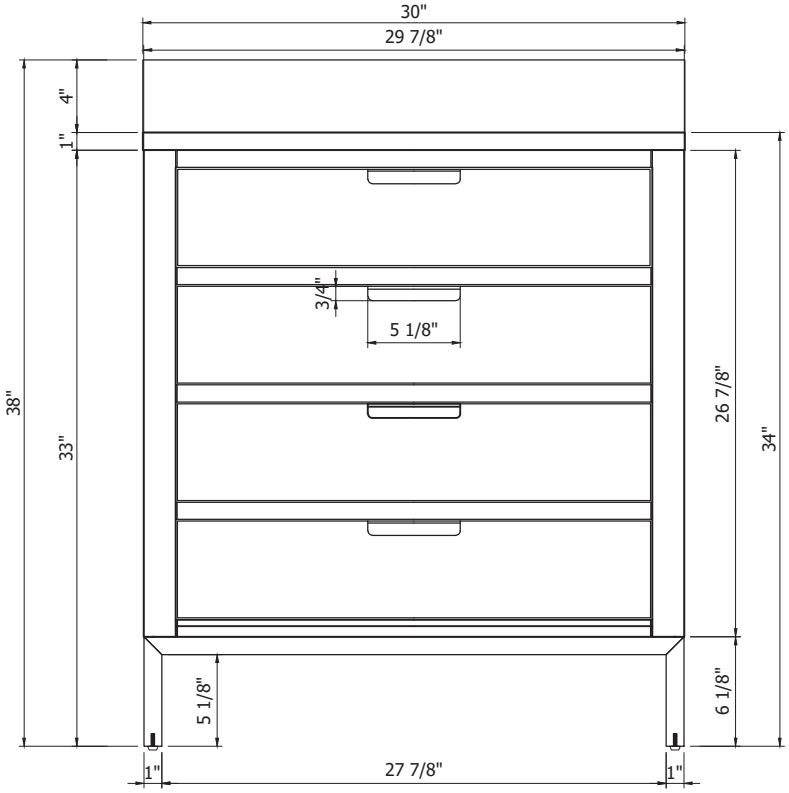
30"
29 7/8"
4"
1"
38"
33"
3/4"
5 1/8"
26 7/8"
34"
5 1/8"
6 1/8"
1"
27 7/8"
1"

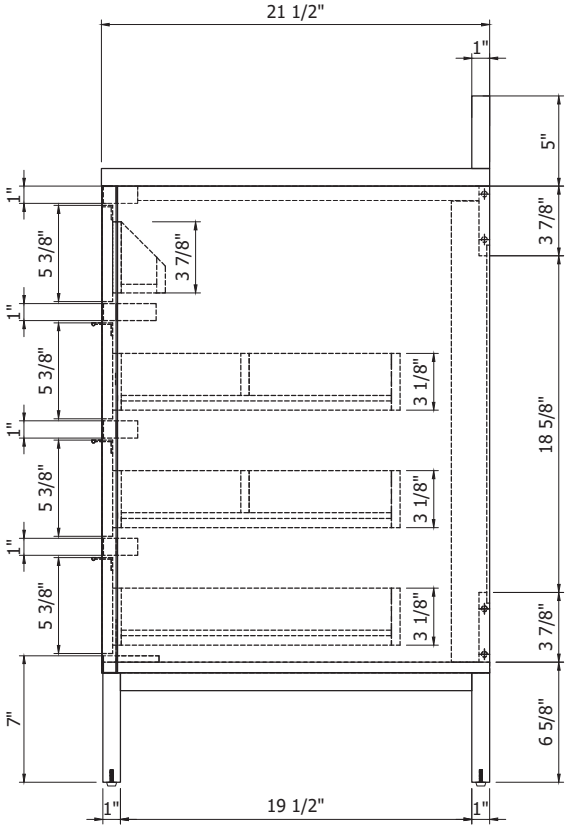
21 1/2"
1"
5"
1"
5 3/8"
3 7/8"
3 7/8"
1"
5 3/8"
3 1/8"
18 5/8"
1"
5 3/8"
3 1/8"
1"
5 3/8"
3 1/8"
3 7/8"
7"
6 5/8"
1"
19 1/2"
1"

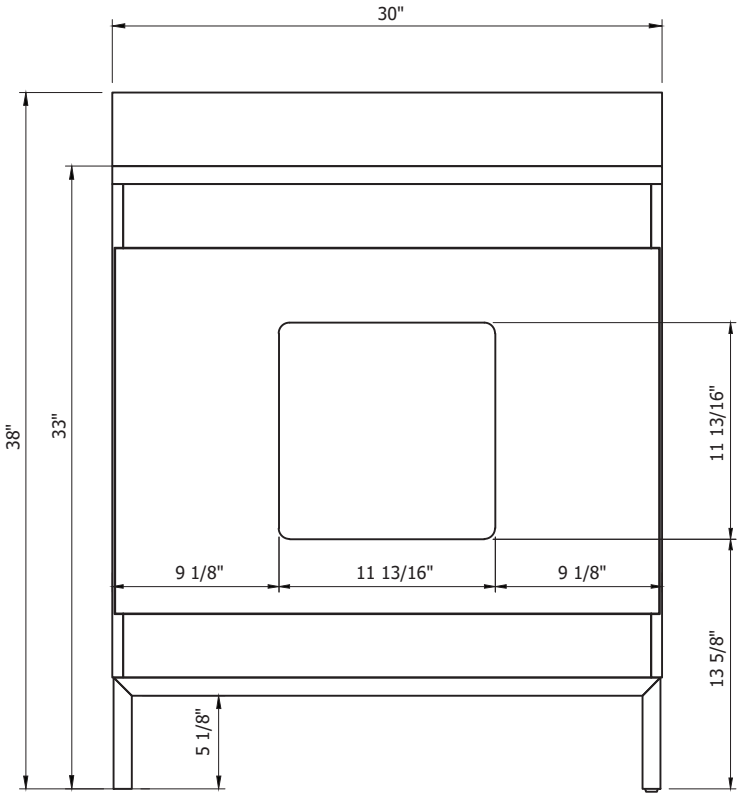
30"
38"
33"
11 13/16"
9 1/8"
11 13/16"
9 1/8"
13 5/8"
5 1/8"

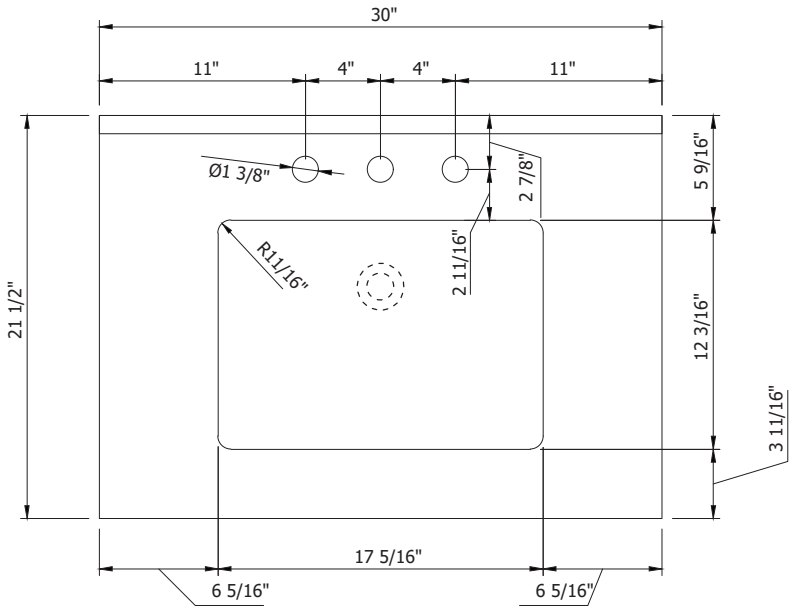
30"
11"
4"
4"
11"
Ø1 3/8"
2 7/8"
5 9/16"
R11/16"
2 11/16"
21 1/2"
12 3/16"
3 11/16"
17 5/16"
6 5/16"
6 5/16"

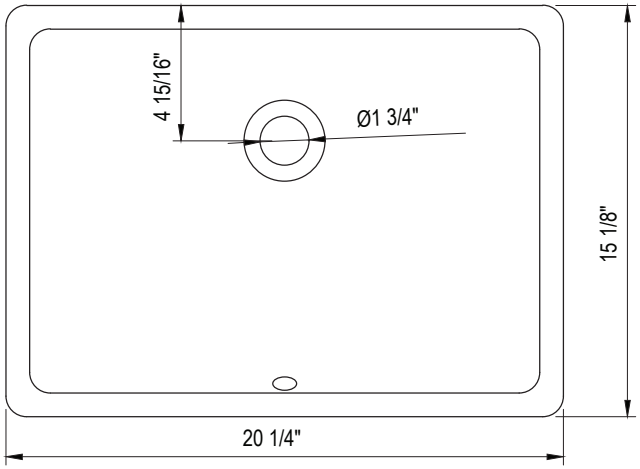
4 15/16"
Ø1 3/4"
15 1/8"
20 1/4"

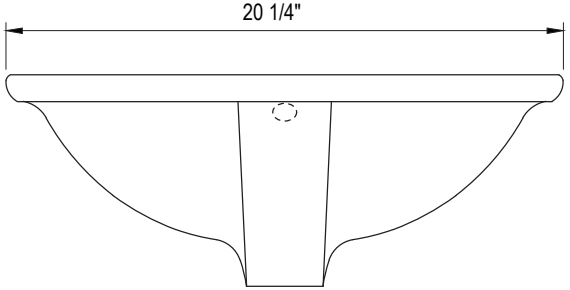
20 1/4"

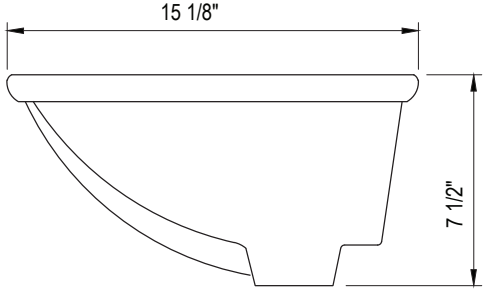
15 1/8"
7 1/2"

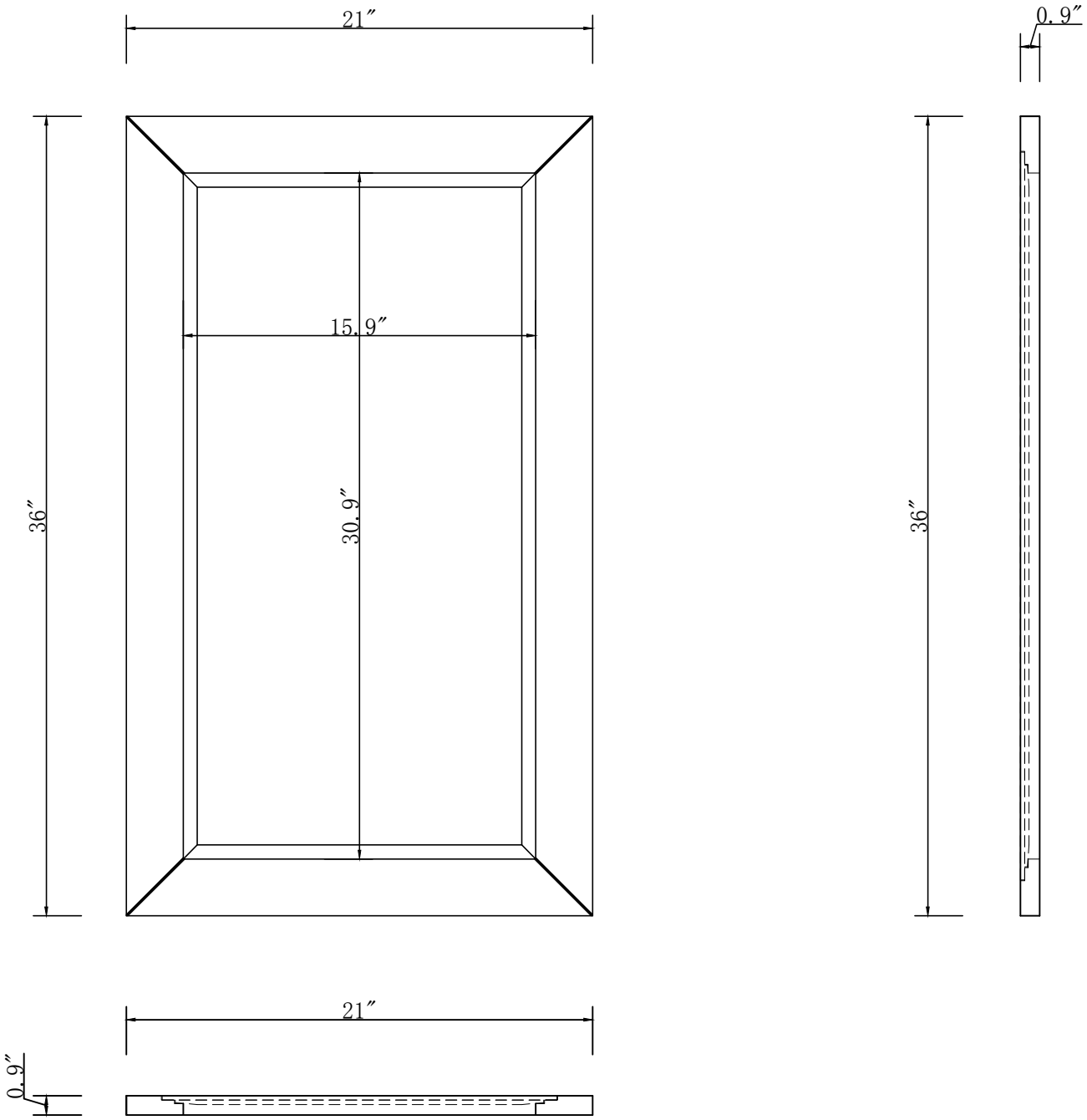
21″
15.9″
36″
30.9″
21″
0.9″
0.9″
36″