KOHLER. Faucets

Bellera®

Pull-down kitchen sink faucet with three-function sprayhead

K-560

Features

- Three-function pull-down sprayhead with touch-control allows you to switch between stream, Sweep® spray and Boost technology.
- Boost technology increases the flow rate by 30% with the press of a button.
- Sweep® spray creates a wide, forceful blade of water for superior cleaning.
- KOHLER ceramic disc valves exceed industry longevity standards for a lifetime of durable performance.
- ProMotion® technology's light, quiet braided hose and swiveling ball joint make the pull-down sprayhead easier and more comfortable to use.
- MasterClean™ sprayface features an easy-to-clean surface that withstands mineral buildup.
- High-arch spout offers superior clearance for filling pots and cleaning.
- Single handle is simple to use and makes adjusting water temperature easy.
- Temperature memory allows faucet to be turned on and off at the temperature set during prior usage.
- 1.5 gpm (5.7 lpm) maximum flow rate at 60 psi (4.14 bar).
- DockNetik® secured docking system locks sprayhead into place when not in use.

Material

- Premium metal construction for durability and reliability.
- KOHLER finishes resist corrosion and tarnishing.

Installation

- For single-hole or three-hole installation (escutcheon plate included)
- Flexible supply lines and installation ring simplify installation.

Adapters, Rough-in and Extension Kits

1012715	Range: 1-3/8" (34 mm) - 3-3/8" (85 mm)

Optional Products/Accessories

1167289
1167290

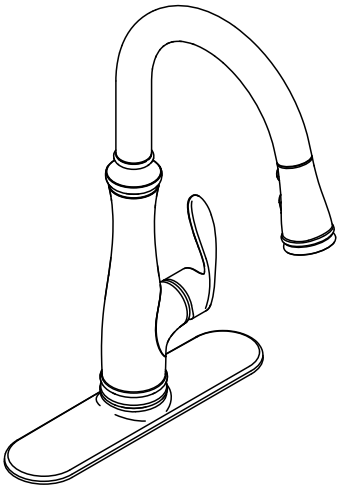

ADA | **CSA B651**

Codes/Standards

ASME A112.18.1/CSA B125.1
ASME A112.18.3
NSF/ANSI 61
NSF/ANSI 372
DOE - Energy Policy Act 1992
California Energy Commission (CEC)
ADA
ICC/ANSI A117.1
CSA B651

KOHLER® Faucet Lifetime Limited Warranty

See website for detailed warranty information.

Available Colors/Finishes

Color tiles intended for reference only.

Color	Code	Description
	CP	Polished Chrome
	VS	Vibrant® Stainless
	2BZ	Oil-Rubbed Bronze

KOHLER Faucets

Bellera®

Pull-down kitchen sink faucet with three-function sprayhead

K-560

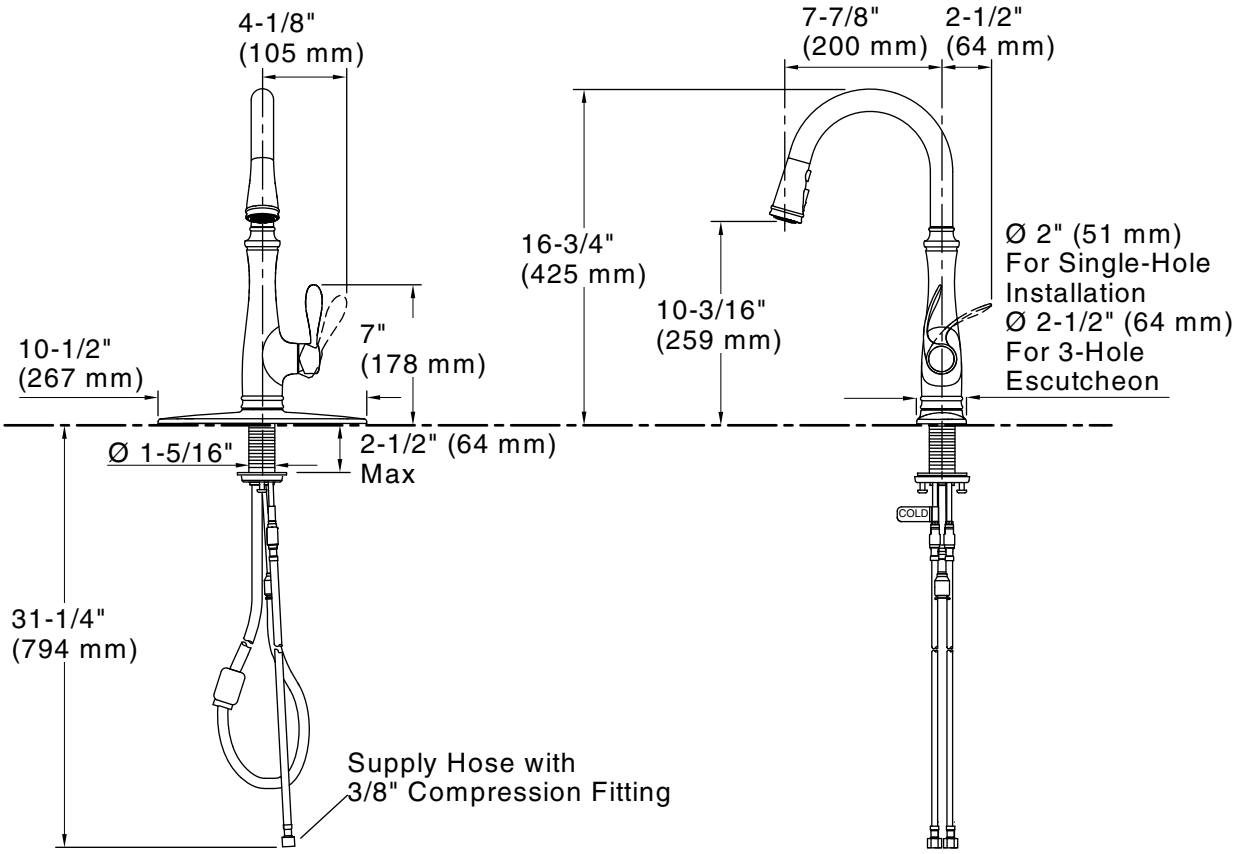

Technical Information

All product dimensions are nominal.

Drain included: No

Notes

Install this product according to the installation guide.

ADA complaint for faucet handles only.

ADA, CSA B651 compliant when installed to the specific requirements of these regulations.