Assembly Instructions

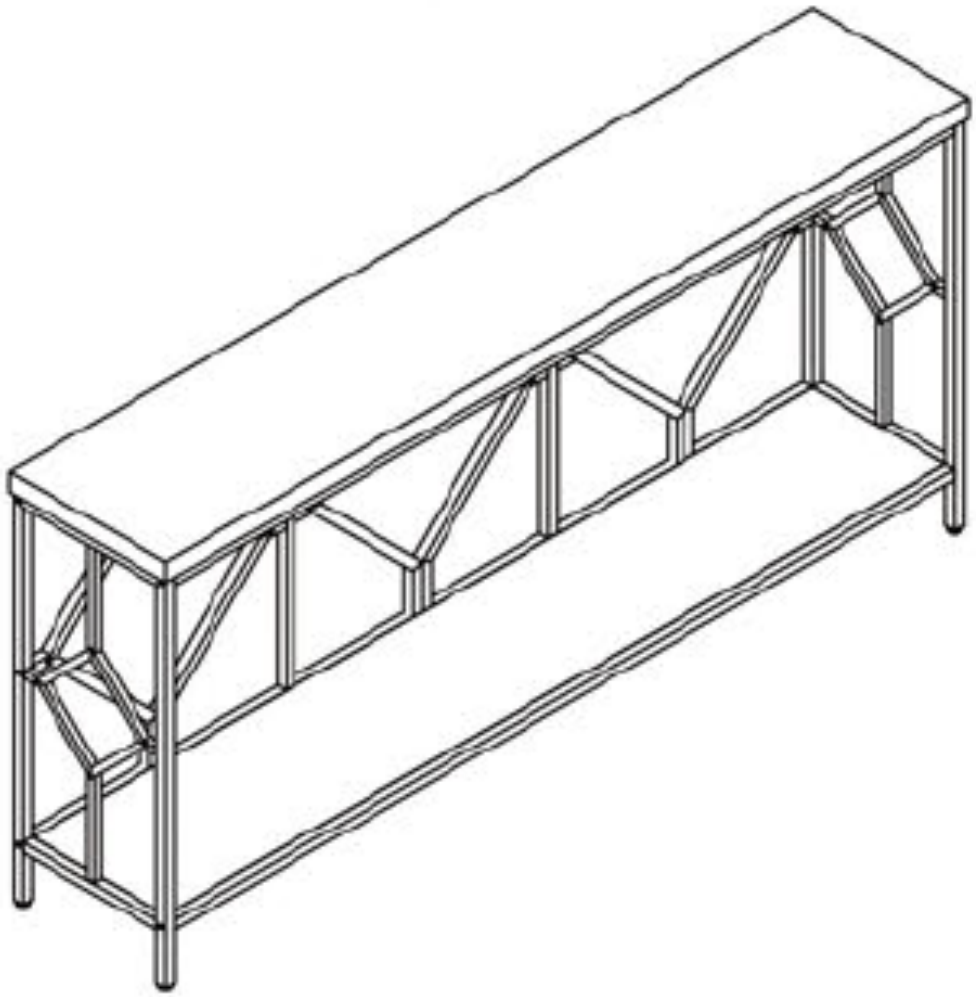

A shelf for holding things

Assembly Instructions:

1. Carefuly read these instructions and keep them for future reference.
2. Refer to the parts list for guidance and ensure that you have all the pieces before starting the assembly process. if anything is missing, damaged, incorrect, contact us FIRSTLY BEFORE assembling.
3. When assembling, place all parts on a soft, clean, and flat surface, such as a carpet, to prevent any scratches.
4. To avoid misalignment of the holes, Please don't full tighten the screws until you ensure all parts in place.

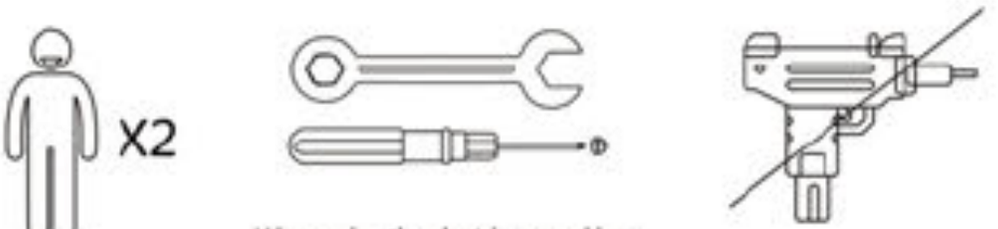

When using the electric screwdriver ,
Reduce the power and torque to avoid damaging the furniture .

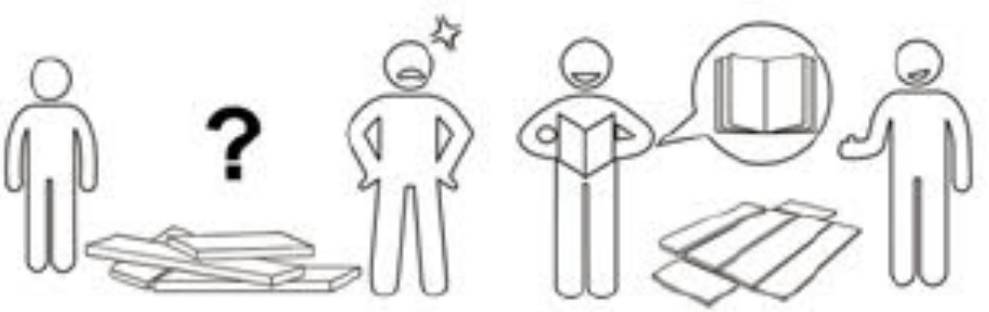

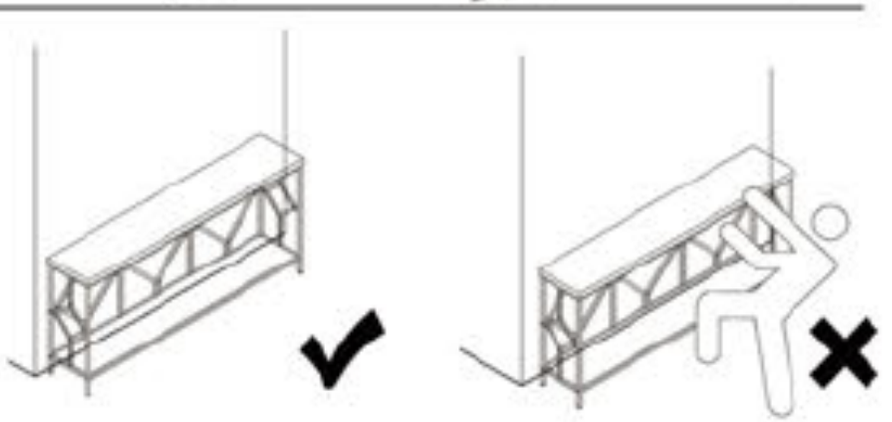

(Install tip-over restraint provided)

Use of tip-over restraints may only reduce but not eliminate,
the risk of tip-over.

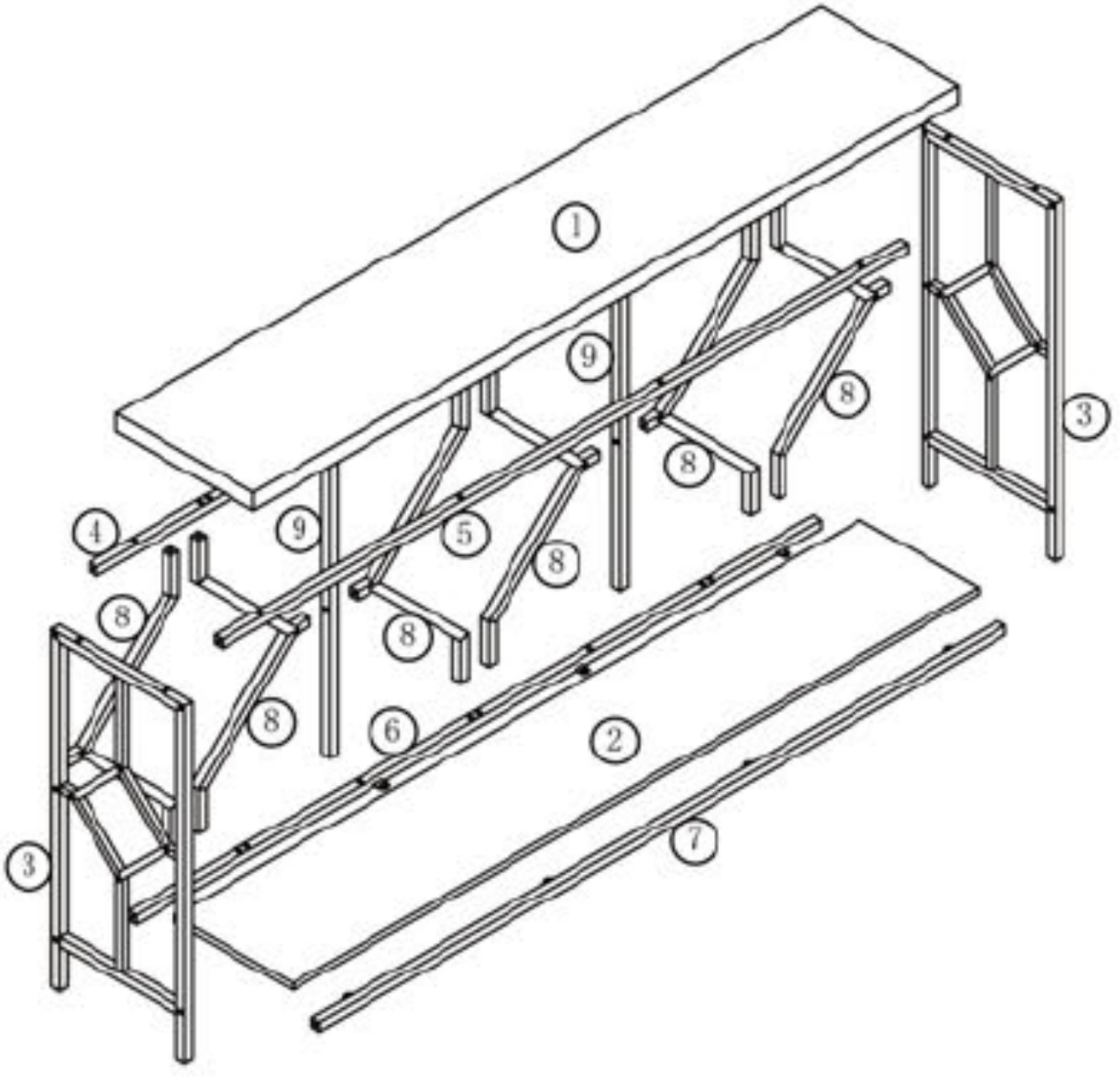

Caution

Make sure all parts are included. Most board parts are labeled or stamped on the raw edge.
Contact us for free replacement if having damaged or missing parts.

Parts & Hardware List

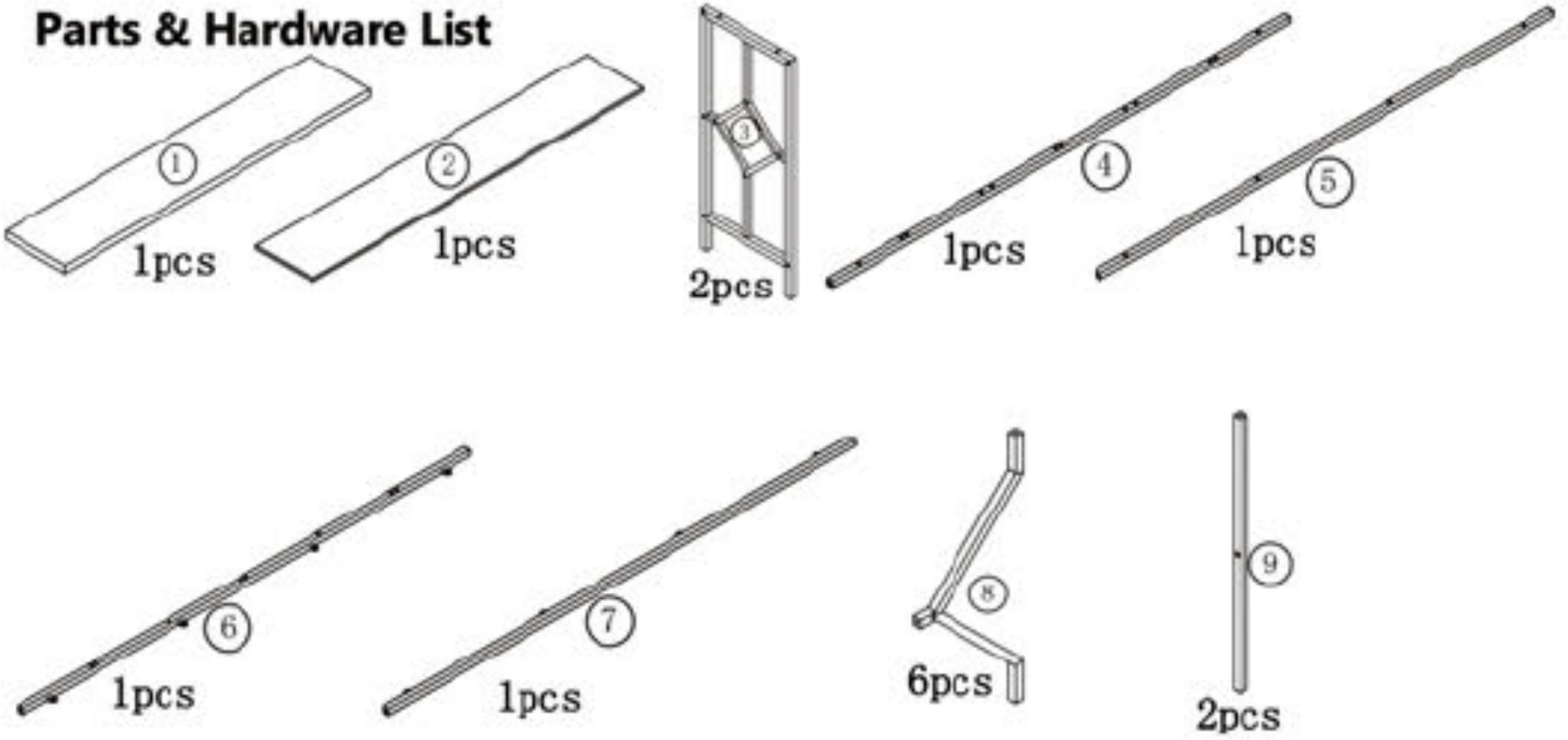

Hardware List

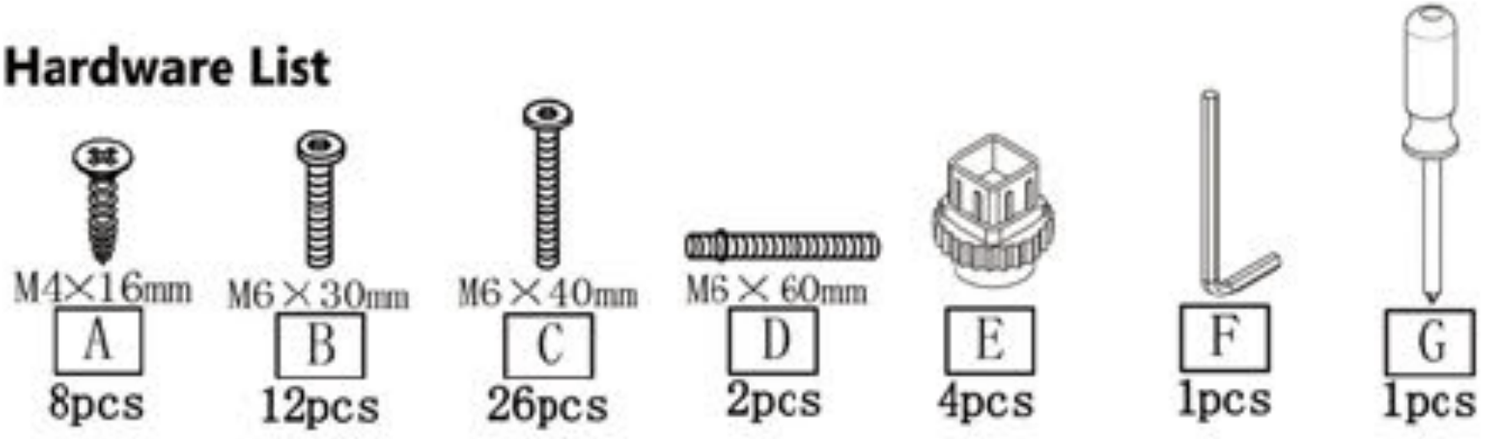

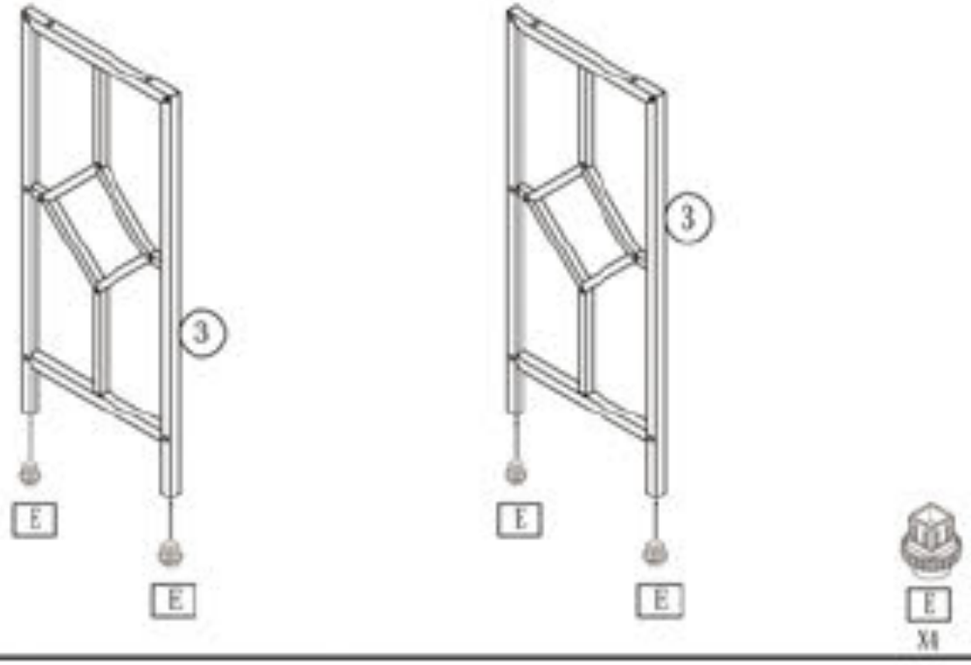
3
E
E
3
E
E
E
X4

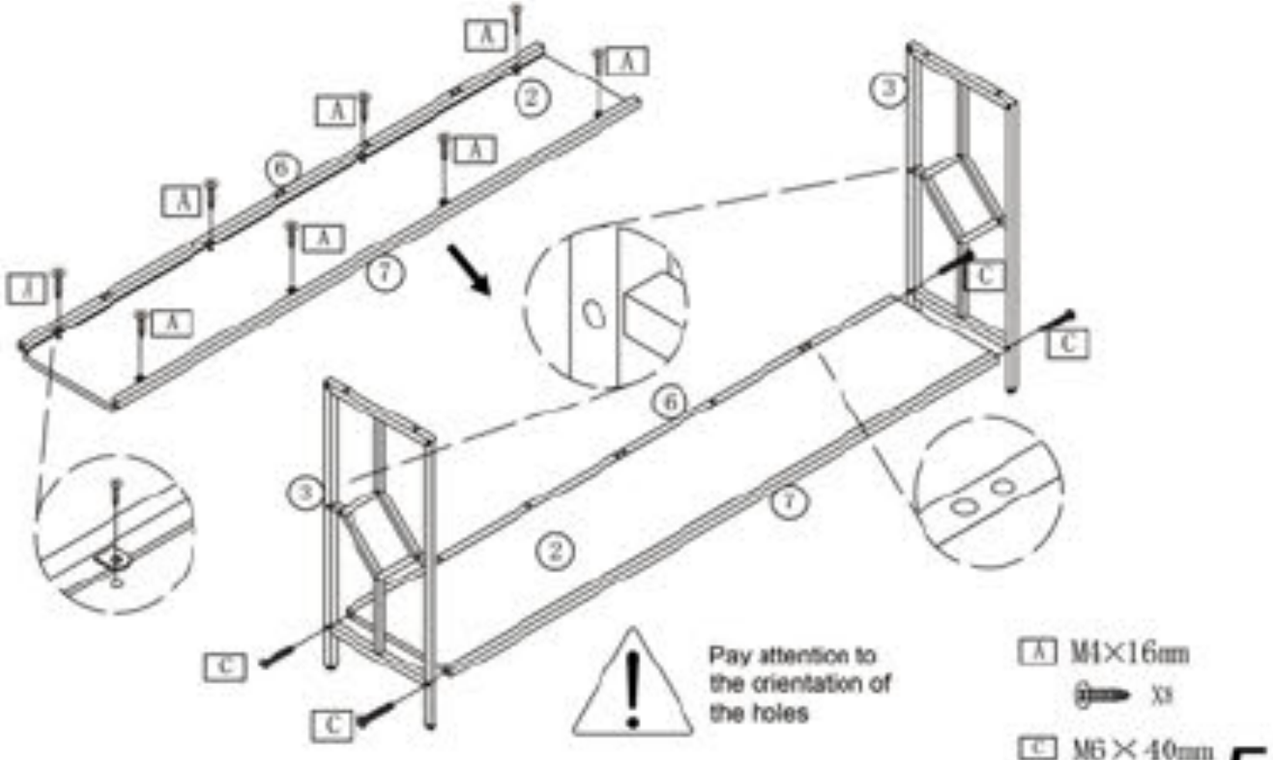
A
A
A
A
A
A
A
A
2
6
7
3
C
C
6
3
7
2
C
C
Pay attention to the orientation of the holes
A M4×16mm
X8
C M6×40mm
X4

5

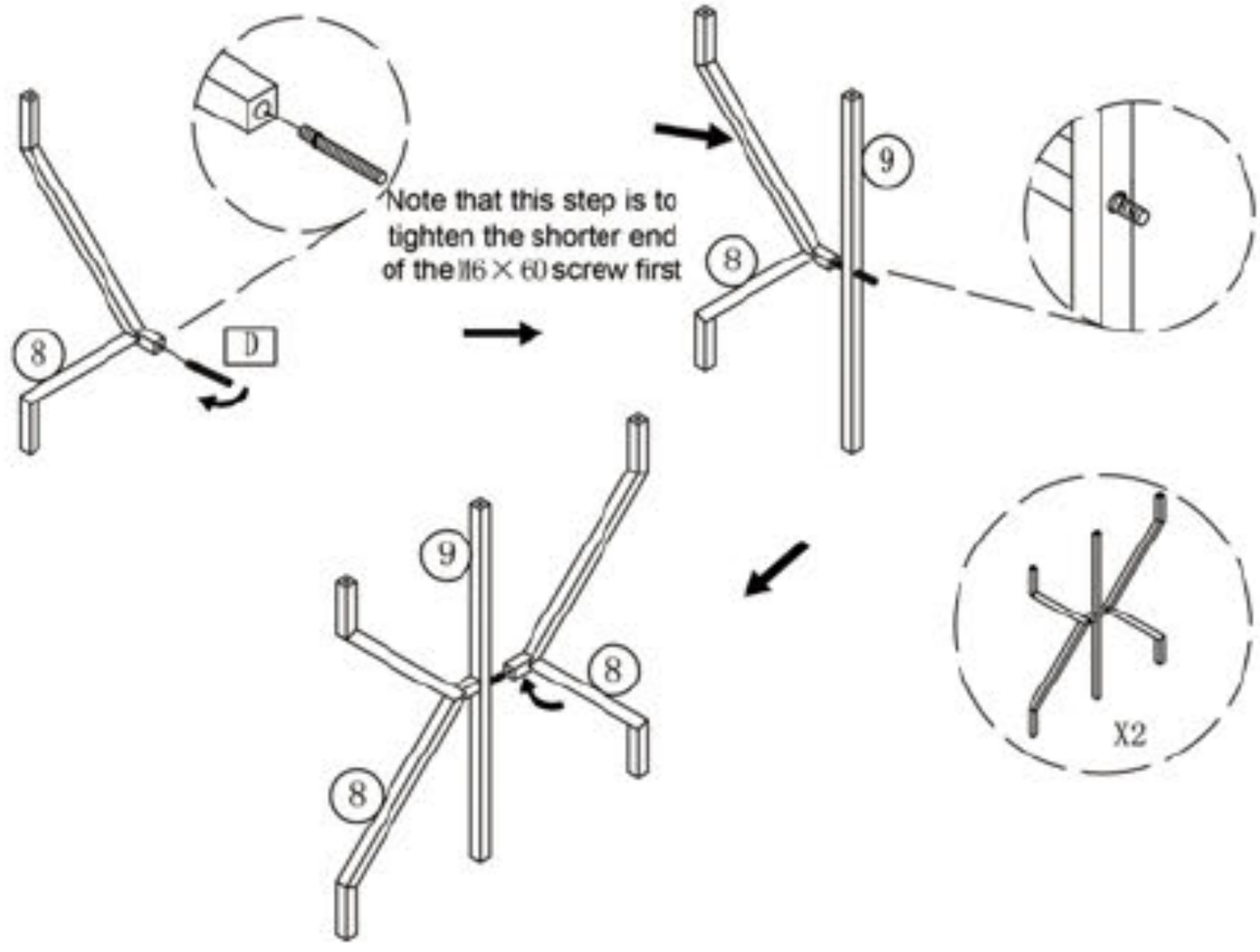
Note that this step is to
tighten the shorter end
of the M6 × 60 screw first
8
D
9
8
9
8
8
X2

D M6 × 60mm

X2

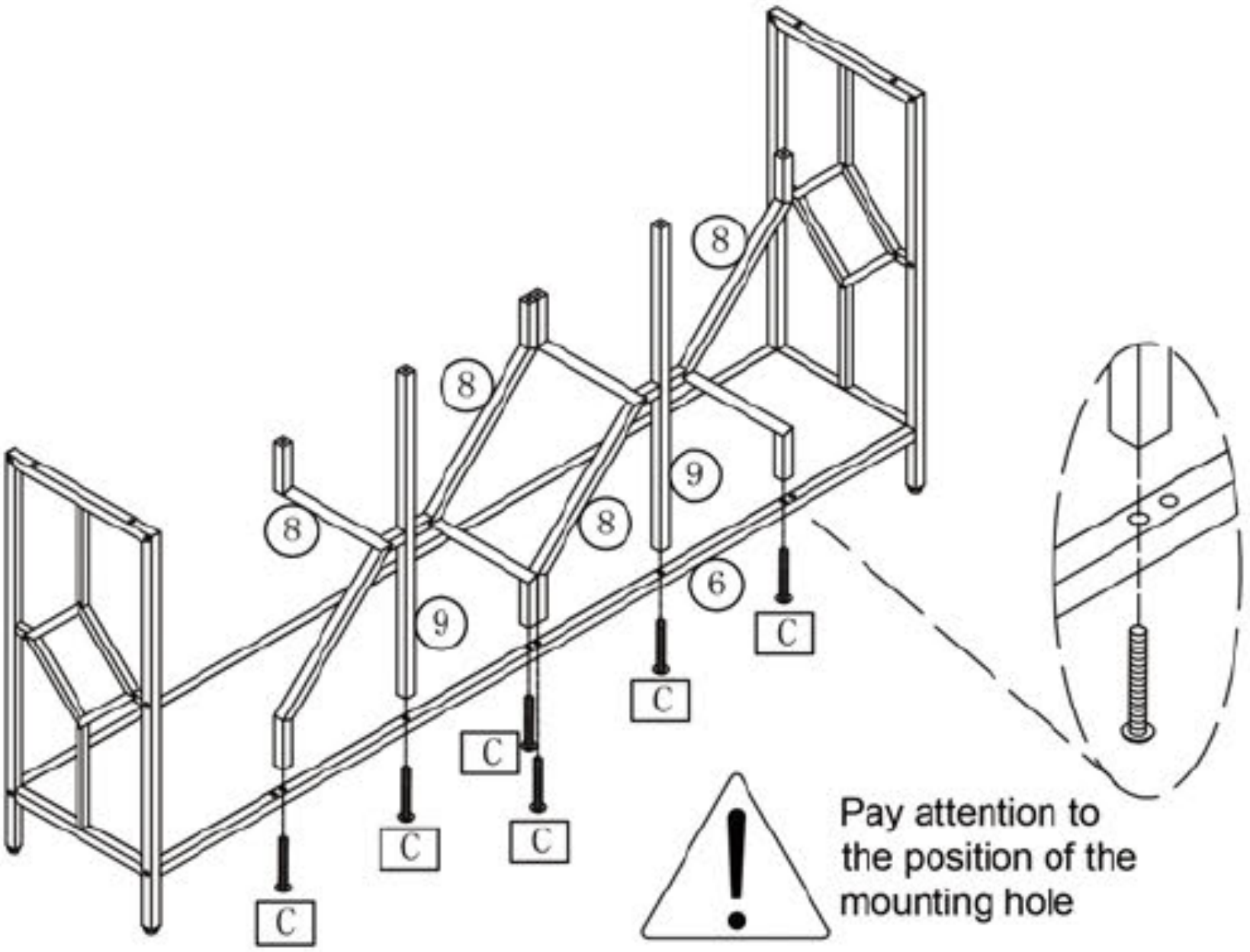
8
8
8
8
9
9
6
C
C
C
C
C
C
Pay attention to
the position of the
mounting hole

C M6×40mm

X6

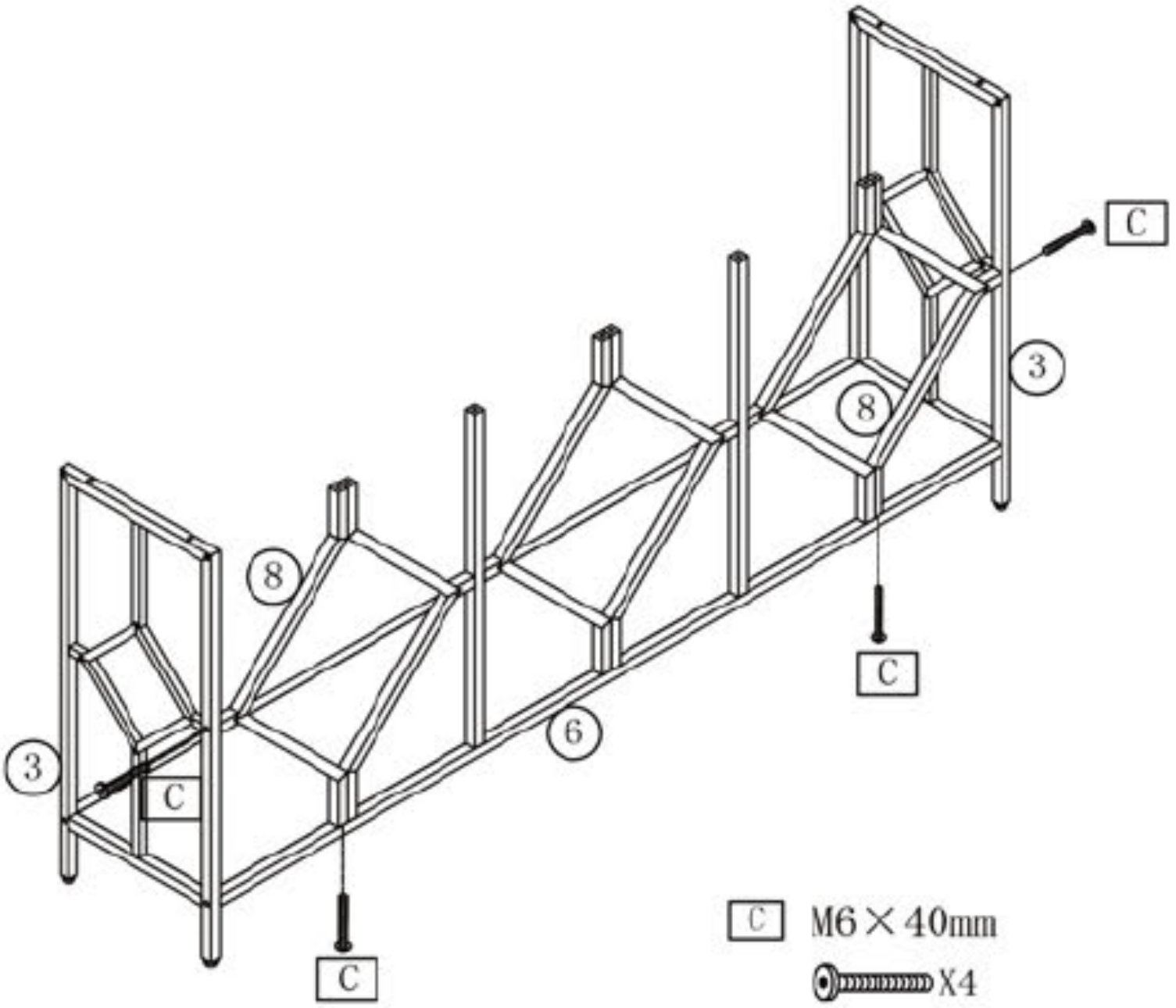
C
3
8
8
C
6
3
C
C
C M6×40mm
X4

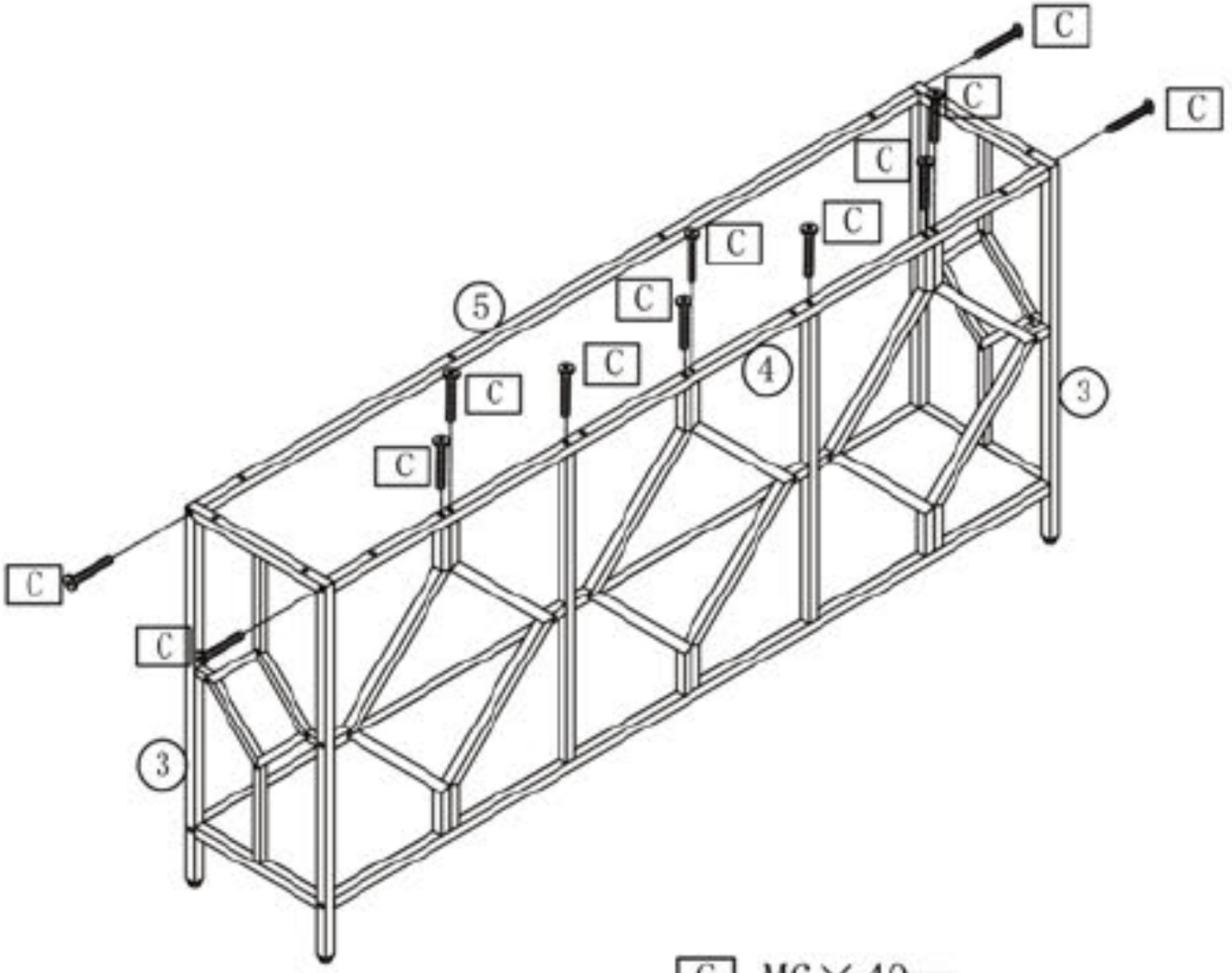

C M6×40mm

X12

9

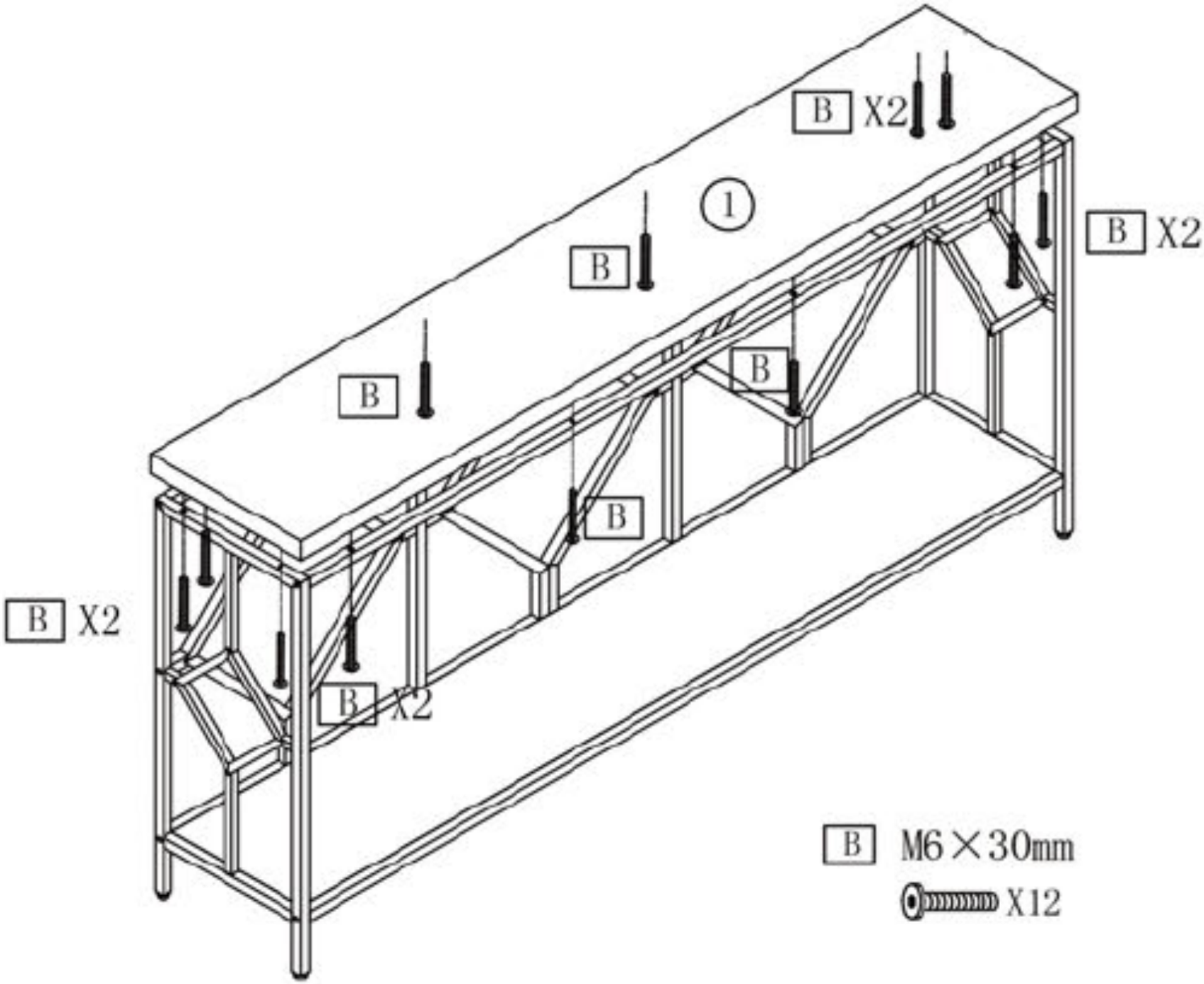
B X2
1
B X2
B
B
B
B
B X2
B X2
B M6×30mm
X12

No heartburn, when we handle the return

Our way	Their way
support@tribesigns.com	Re-package item
Replacement/Refund	Schedule pick-up
You	Track package
	Replacement
	You