SOFA WITH SIDE TABLE

Instruction Manual

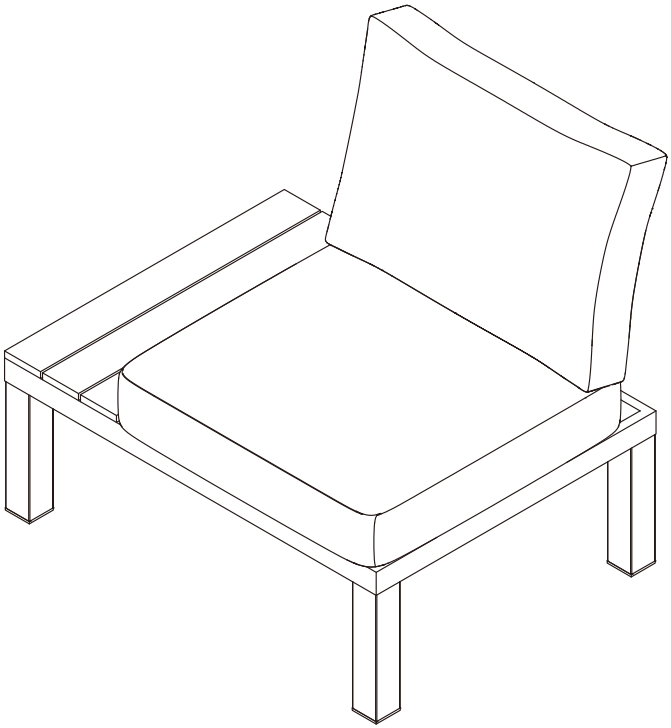

- Excellent weather resistance
- Easy to clean and maintain

Instruction Manual

ASSEMBLYINSTRUCTIONS:

· Our clear, easy-to-follow, step-by-step instructions will guide you through the project from start to finish.

· Do not skip any steps. It is of utmost importance to assemble all of the parts according to the directions.

· Item identi cation: For ease of identi cation, all parts are labeled to correspond to the step number in which the part is used.

IMPORTANT:

· Read following instructions carefully before using the sofa.

· Be aware that some parts are heavy and have sharp edges.

· Do not overtighten screws (Insert all screws before tighten screws).

· Firmly secure all bolts, screws and nuts before use.

· Please do not exceed the weight limitations of this item.

· Recon rm that all bolts, screws, and nuts are secure every 90 days.

CARE &SAFETY:

· Always use on rm level ground.

· Keep all children and pets away from assembly area. Children and pets should be supervised while the product is being assembled.

· The assembled product should be located at least 6 feet (2m) from any obstruction such as fence, garage, house, overhanging branches, laundry lines or electrical wires.

· Do not use or store this item in the proximity of open flame or flammable/-combustible chemicals.

· In case of fire, do not attempt to extinguish any burning polypropylene with water.

· Please contact Customer Service if you have any problems or discover any missing parts.

Care & Maintenance

Do not clean furniture with harsh cleansers or polish, avoid using steel wool to clean the furniture.

To obtain the longest lifespan of your outdoor products, minimizing exposure to direct sunlight is recommended.

Children should not climb or jump on the furniture.

To obtain the longest lifespan of your outdoor products, avoid extended and lengthy exposure to rain and snow.Whenever possible cover the product and /or place under patio or awnings.

Stains may be removed with mild soap solution and damp cloth.

Keep away from sources of ignition.

Dust and pick-up spills using a clean,non-colored, lint-free cloth.

Do not use sharp objects on the product surface.

ASSEMBLY PARTS

A 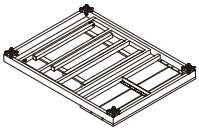	B 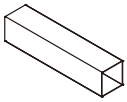	C 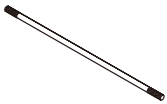
Seat Panel: 1pc	Leg: 4pcs	Leg Stud: 4pcs

D	E	F
Small Washers: 4pcs	Big Washers: 4pcs	Nut: 8pcs

G 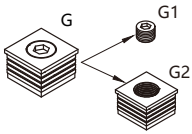	H 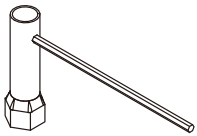	I 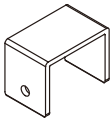
Foot Pad: 4pcs	Socket Wrench: 1pc	Snap clip: 2pcs

J 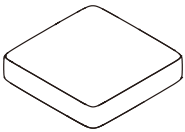	K 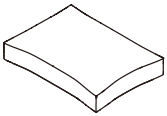
Seat Cushion: 1pc	Back Cushion: 1pc

ASSEMBLY PARTS

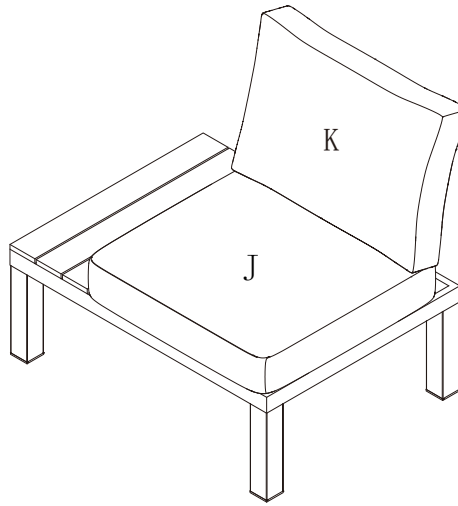

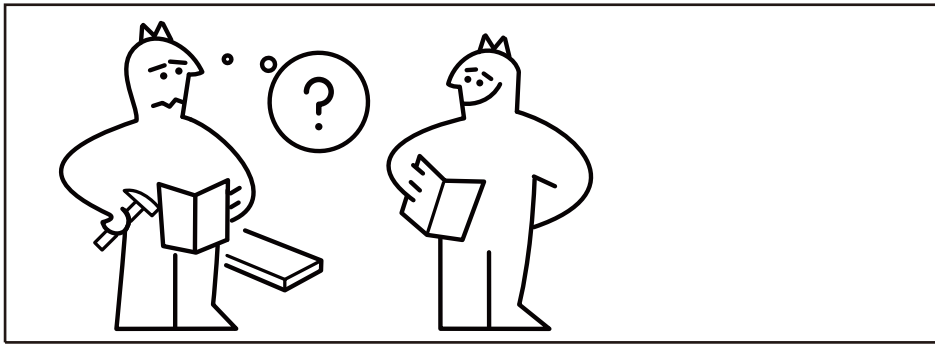

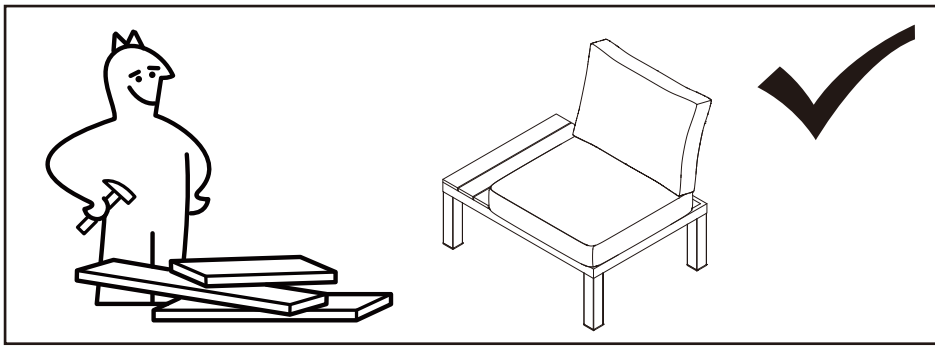

Step 1

Install the Nuts (F) to the Leg Studs (C) to 2-3 cm, then put the Small Washer (D) onto it. Then install them to the threaded hole of the Seat Panel (A) and tighten them with the Socket Wrench (H).

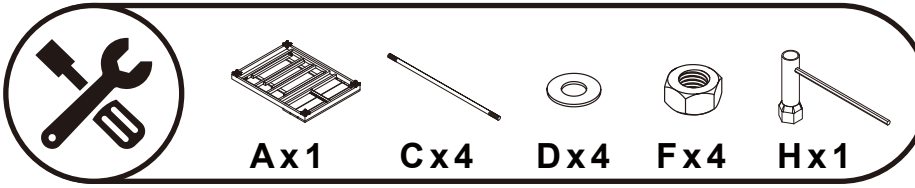

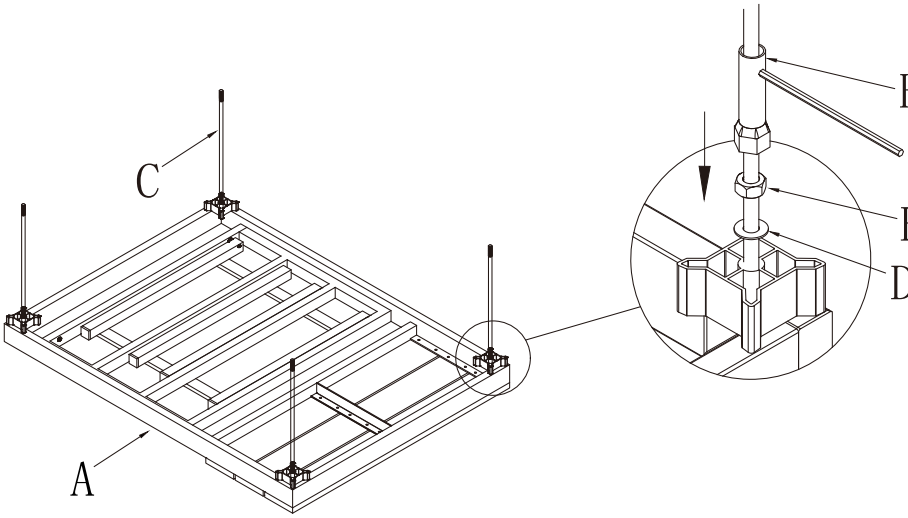

Step 2

Separate the Footpad (G) into the Plastic Screw (G1) and Pad (G2) with the Socket Wrench (H), then insert the Foot Pads (G2) into all four Legs (B).

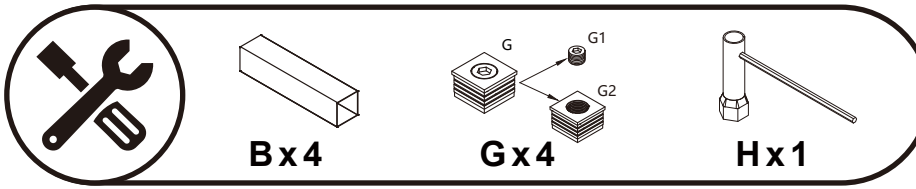

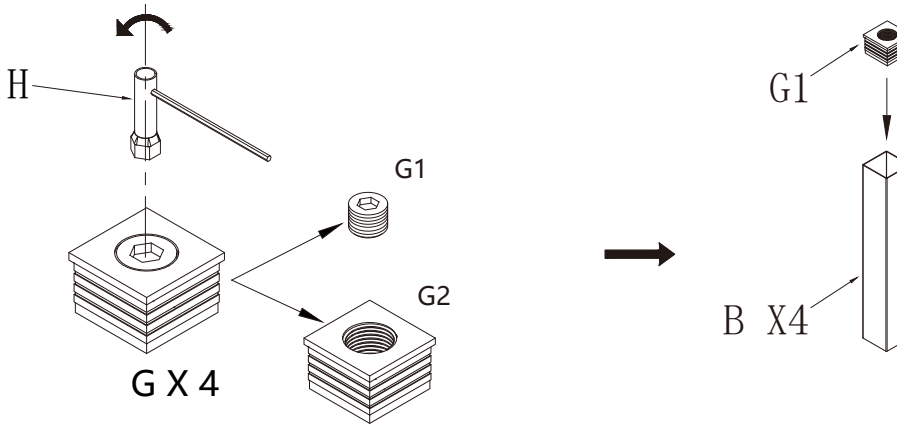

Step 3

Insert all four Legs (B) into the Leg Studs (C), put the Big Washers (E) and Nuts (F), then tighten them with the Socket Wrench (H). Finally install the Plastic Screws (G1) and tighten with the Socket Wrench (H).

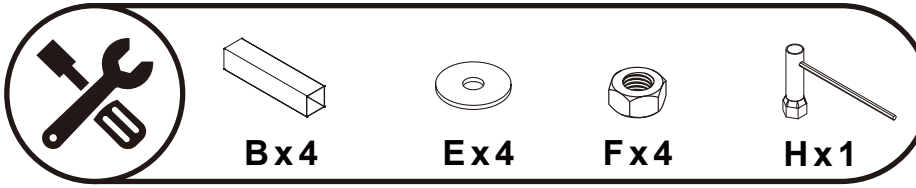

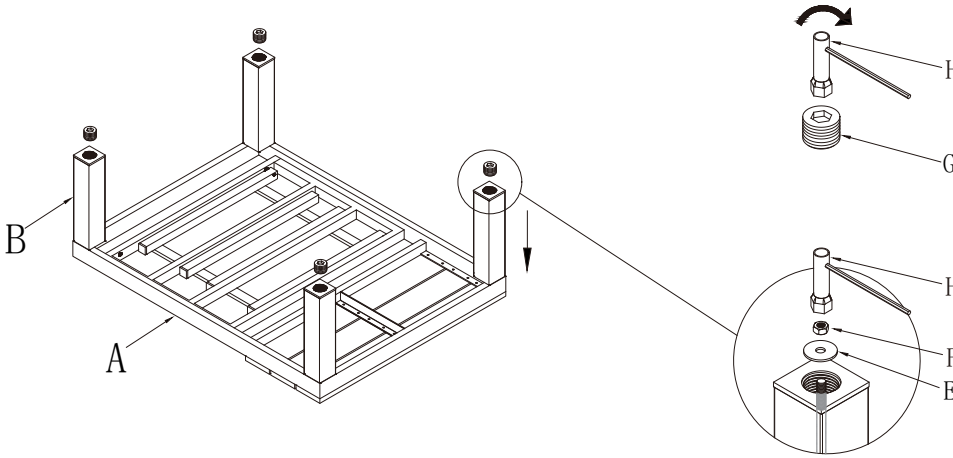

Step 4

The seat can be lifted as a backrest. If multiple seats need to be connected, you can install the snap clips (I) to connect them.

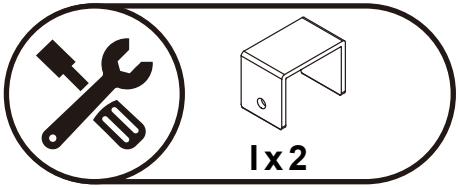

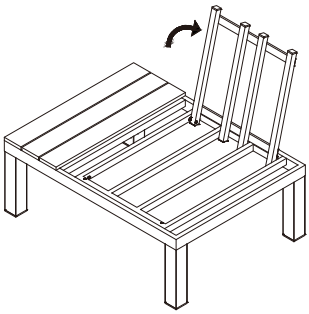

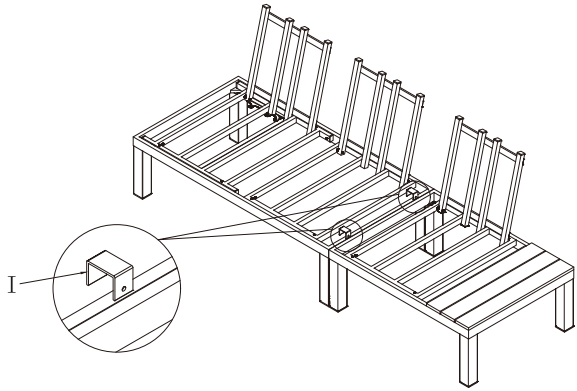

Step 5

Put the Seat cushion (J) and Back Cushion (K).

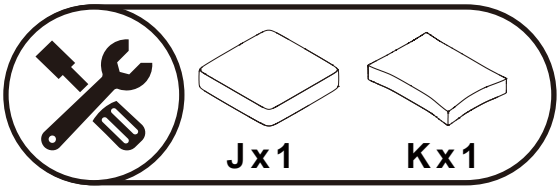

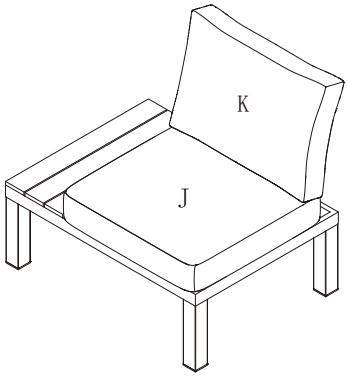

Step 6

If you need to change the position of the backrest, the backrests can be reversed by unscrewing the screws at the connection point with Socket Wrench (H).

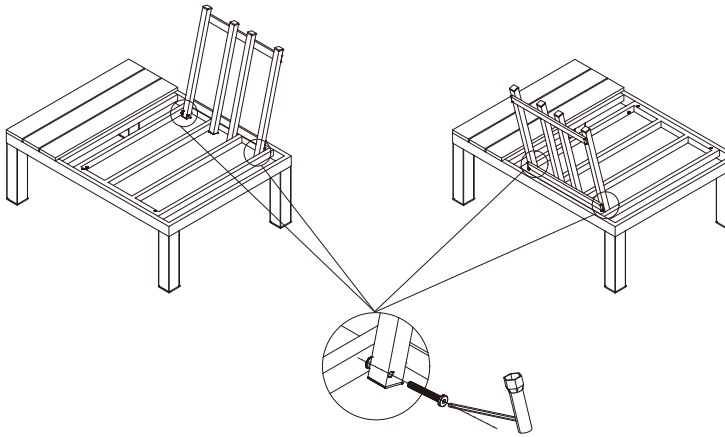

PAY ATTENTION

DO NOT EXCEED THE MAXIMUM LOAD OF *400 LBS*

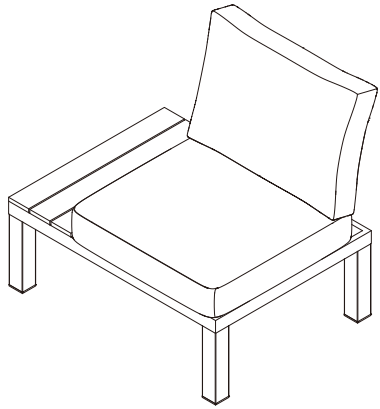

DONE !

*Due to transportation, the cushion may be slightly compressed and the surface fabric may have creases. It will take time to recover, but gently tapping it can speed up the rebound.

WARRANTY

Sofa with Side Table
3-year basic Warranty Program

- We offers a 3-year basic warranty on the entire sofa from the date of purchase against defects in material and workmanship. During this period we will repair and replace, at our discretion the defective component.

- This warranty does not apply to improperly installed, handled, abused, damaged by user error, nor to any unit which has been repaired or altered by unauthorized repair companies.

- Under no circumstances will the customer entitled warranty to consequential or incidental damages. This limited 3-year basic warranty will only grant customers certain legal rights; customers may have other rights according to different state laws.