Assembly Instruction

Chair

Legs & hardware are stored at the bottom of sofa, please take out the legs and hardware for assembly.

Note: Do not use power tools for assembly. Power tools increase the risk of over tightening which lead to spliting or cracking the wood.

Component list

No	Drawing	Qty	Description
A	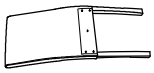	2 PCS	BACKREST WITH WOOD LEGS
B		2 PCS	SEAT
C		2 SETS	SET OF FRONT WOOD LEG
D	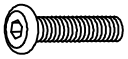	10 PCS	BOLT Ø5/16" 6CM
E		8 PCS	BOLT Ø5/16" 8CM
F		18 PCS	SPRING WASHER
G		18 PCS	FLAT WASHER
H		2 PCS	ALLEN KEY

Step #1

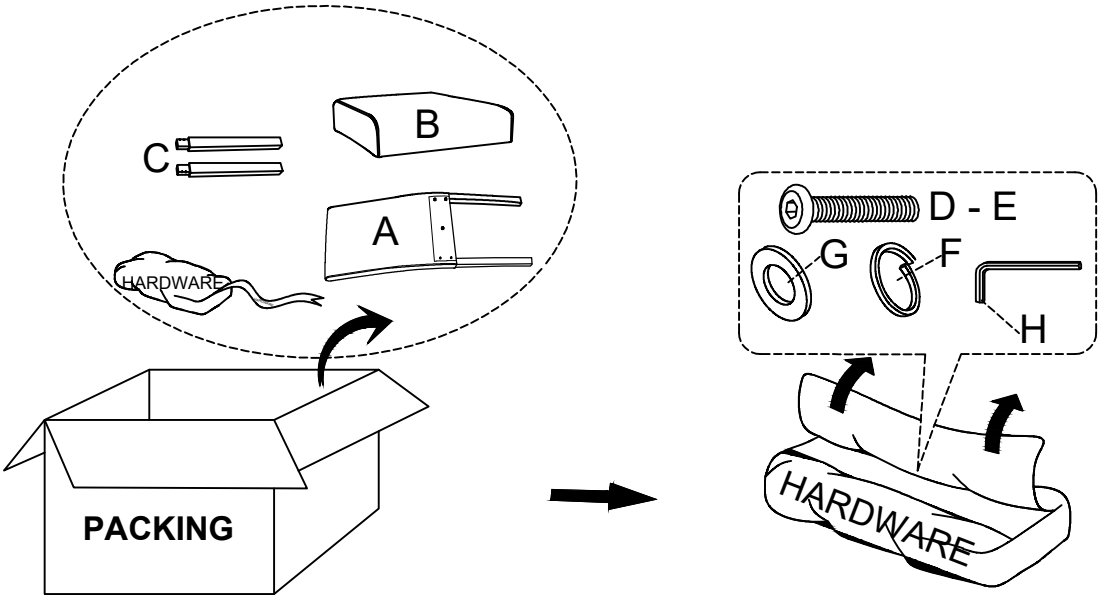

Step #2

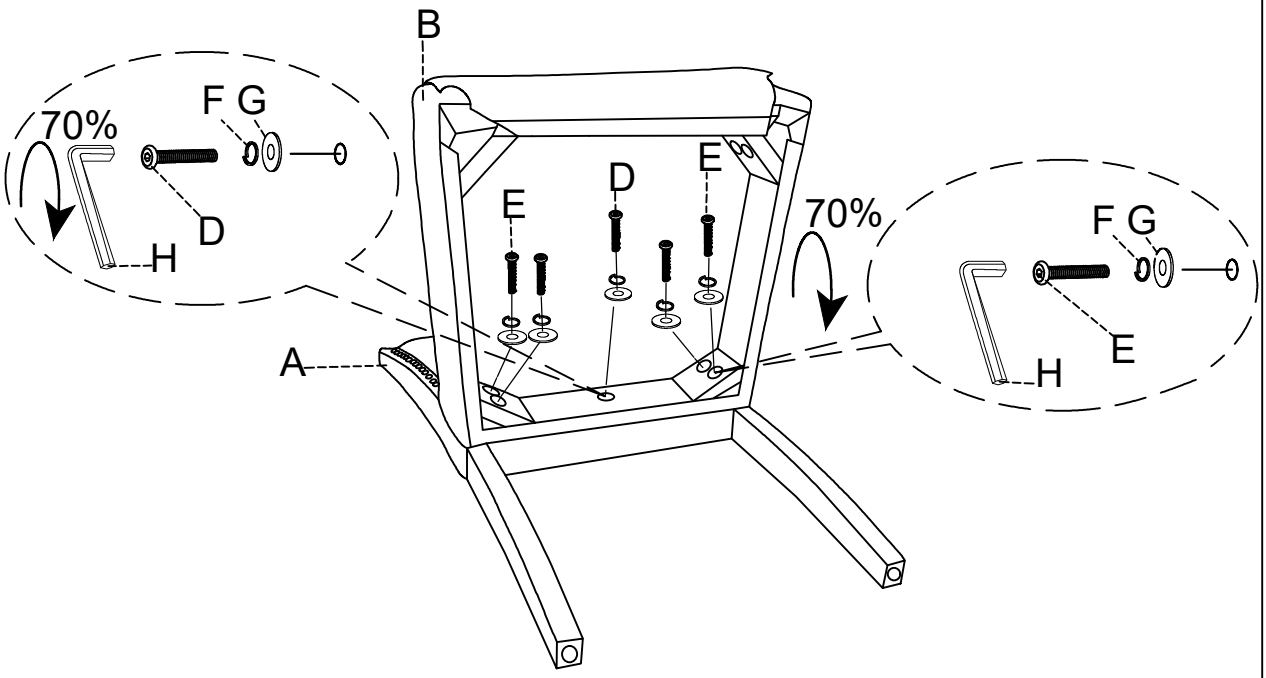

Step #3

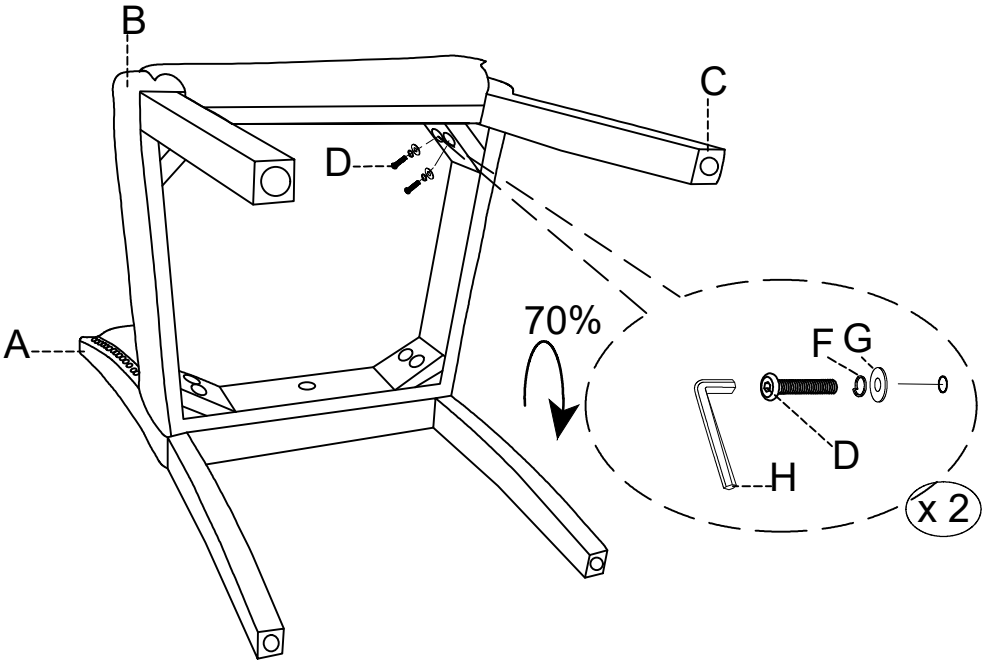

Step #4

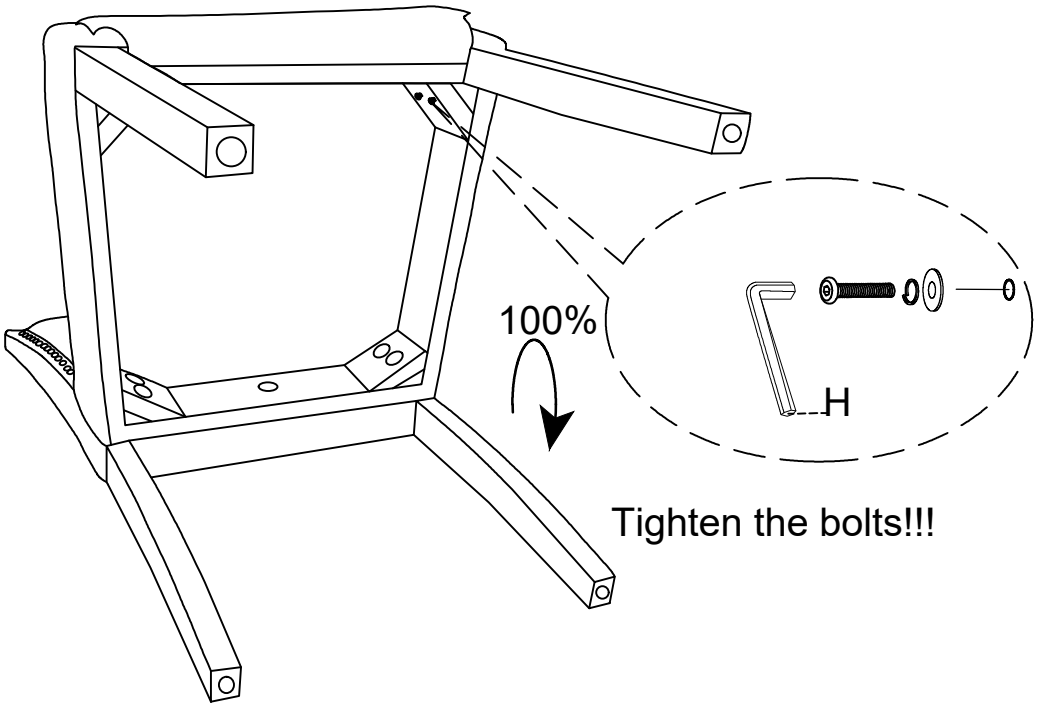

Step #5

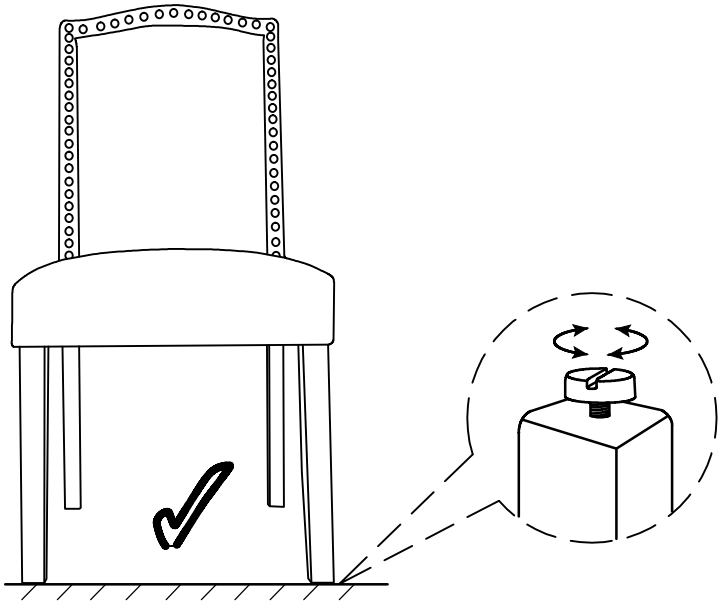

Please put the chair on a flat surface.
Please adjuse theparts connecting the seat and the back to make sure four legs are on same level .

Step #6

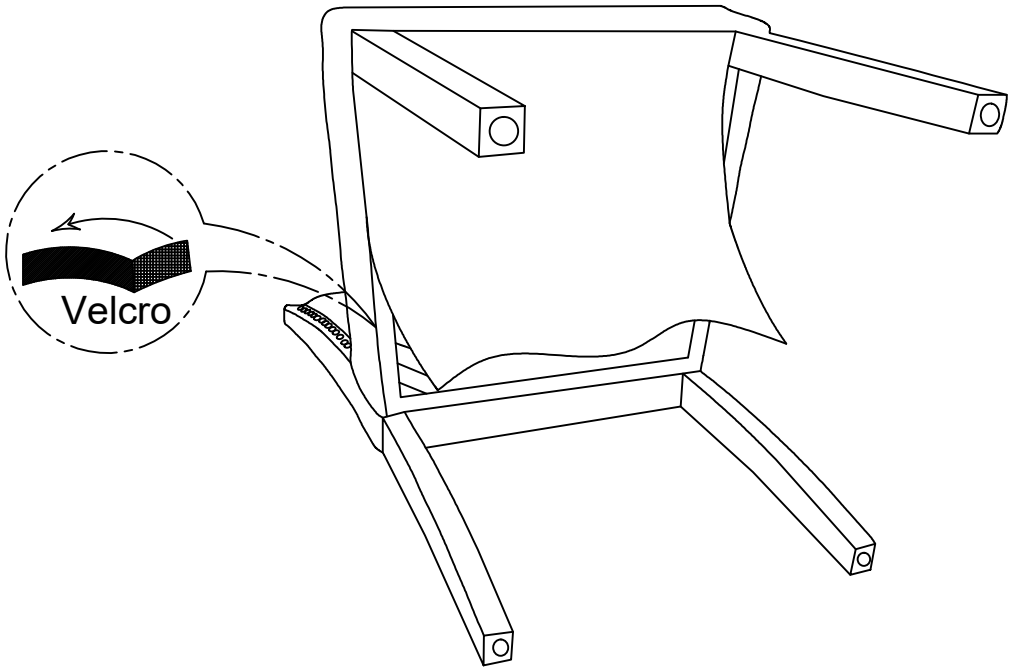

Step #7

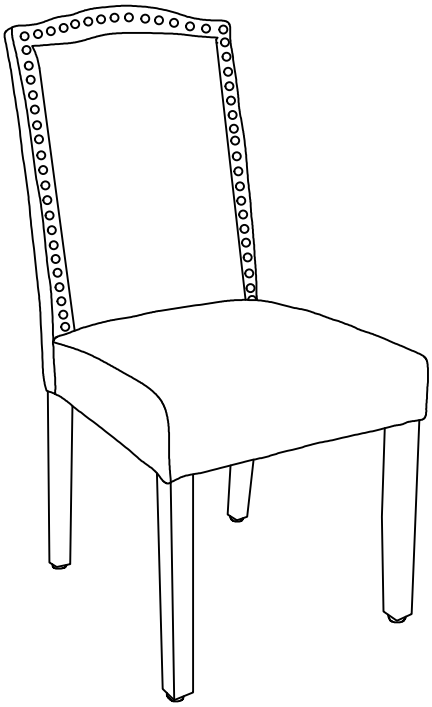

Completed

Care Instruction for Fabric Furniture:

In order to maintain the original appearance of your fabric Furniture, please follow below simple care procedures:

- Avoid exposing furniture directly to sunlight or heating and air conditioning outlets. Sunlight and or exposure to heating and air conditioning outlets will fade/damage Fabric.
- Vacuum or wipe with a soft cloth to remove dust.
- Hardware may loosen over time. Periodically check to make sure all connection are tight, Re-tighten if necessary

For items use on wooden floor, hard surfaces or carpets, it is recommended to Install protective pads under all legs and supports to avoid/prevent from damages/scratches and discoloration.