Gatco Fine Bathware
"The Finishing Touch"

Spa Rack

General specifications

#1544 (Chrome)

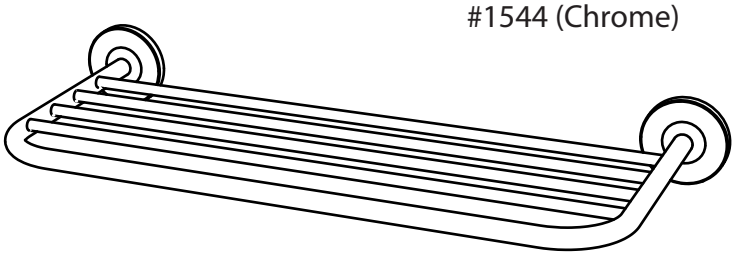

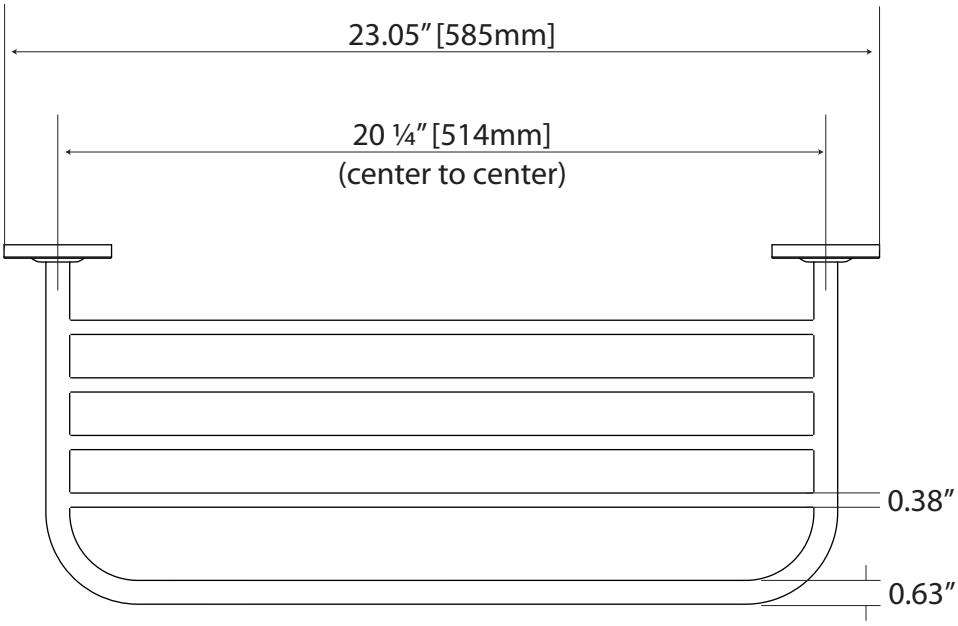

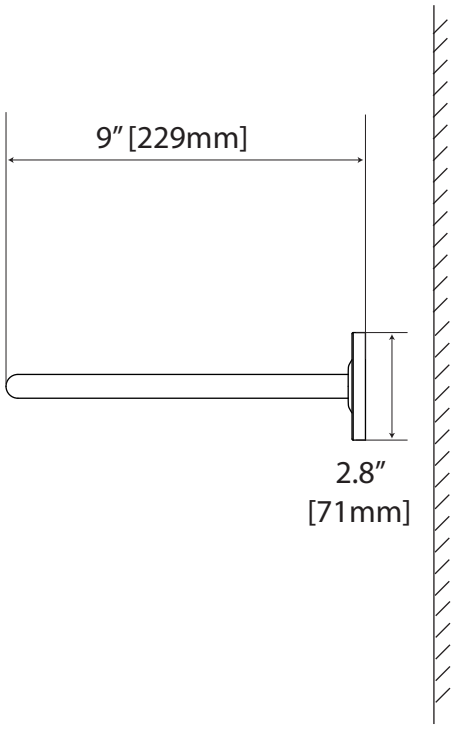

The manufacturer reserves the right to, and do time to time, make changes and improvements in designs and dimensions.
Updated on March 31, 2011