ASSEMBLY INSTRUCTION FOR ACME FURNITURE

MODEL# BD07211EK, BD07212Q

Thank you for purchasing the quality product. Be sure tocheck all packing material carefullyforsmallpartswhichmay havecome loose inside the carton during shipment. Seperate, identify and count all parts and metal hardware. Compare withall parts list to be sureall parts are present. If any part(s) are missing or damaged, please contact your local furniture dealer. For efficient and speedy service, please indicate the model number and code letter of part(s) needed.

Do not fully tighten screws until fully assembled *

	COMPONENT PARTS	
DESCRIPTION	PART NAME	QTY(PCS)
A	headboard 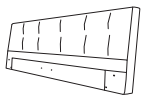	1
B	head rail 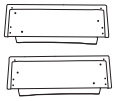	1
C	foot rail 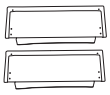	1
D	side rail 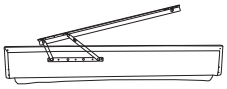	2
E	side rail 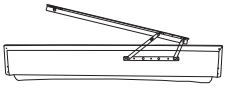	2
F	storage base cloth 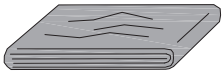	2
G	lid 	2
H	topper 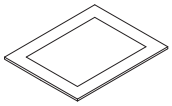	1
I	spanner 	1
J	center support leg 	2

HARDWARE REQUIRED

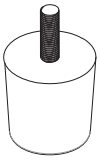

1 *8 legs

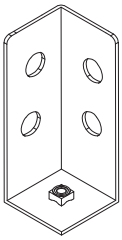

2 *8 corner bracket



3 *8 corner bracket

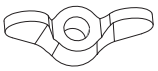

4 *8 wing nut

5 *4 gas lift strut

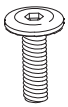

M6*25

6 *72 screws



M8*65

7 *6 screws

Attention

*** * * Some number parts listed on the instruction sheet may not be in parts bag asthey may already be assembled. Carefully check parts and packing materials prior to ordering replacements.**

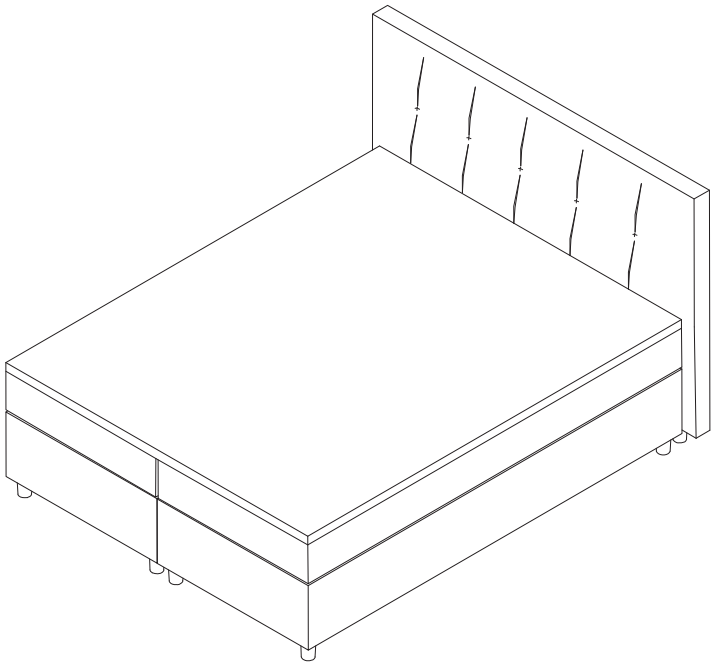

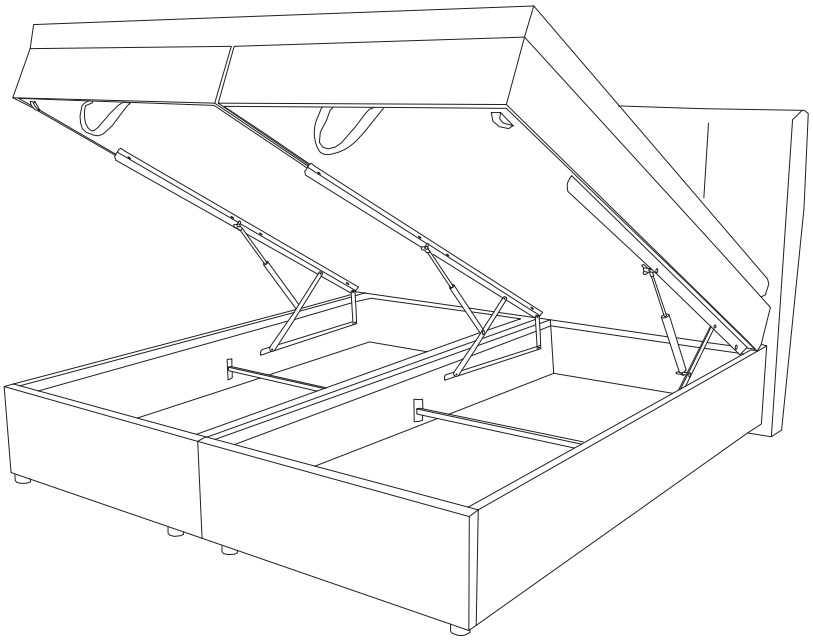

Install all the relevant screws,but do not tighten them completely at the very beginning.
Tighten the screws fully one by one.

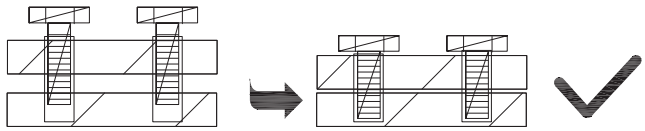

Don't tighten up the screw before you start next mounting during the installation.

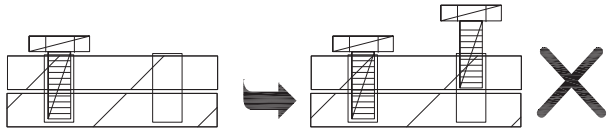

1

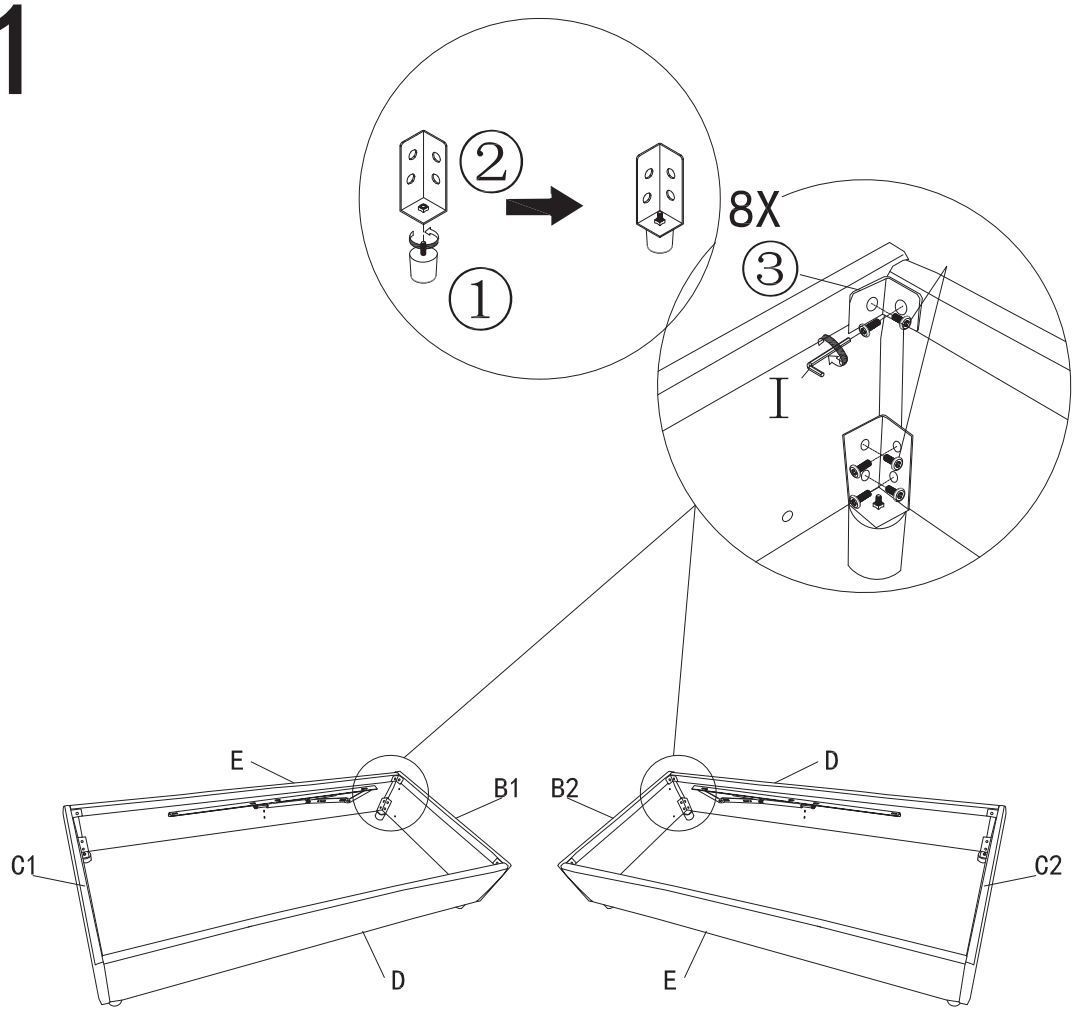

2

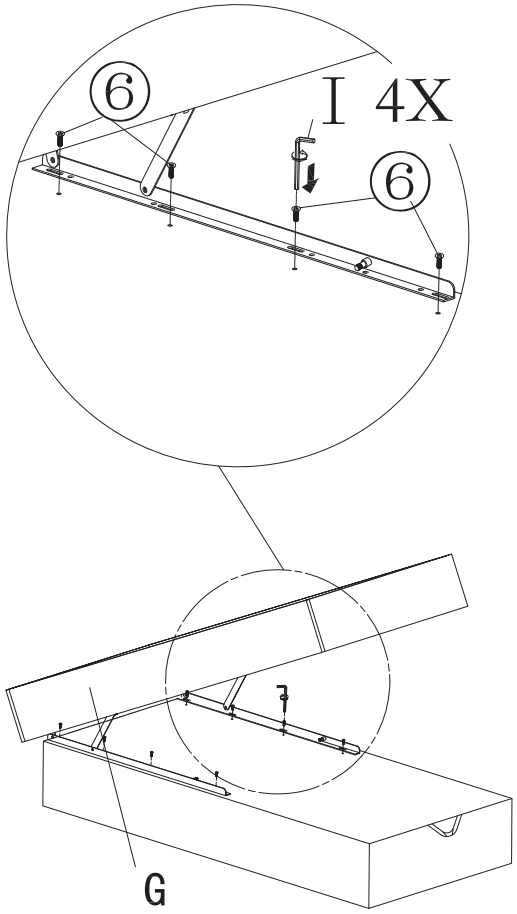

3

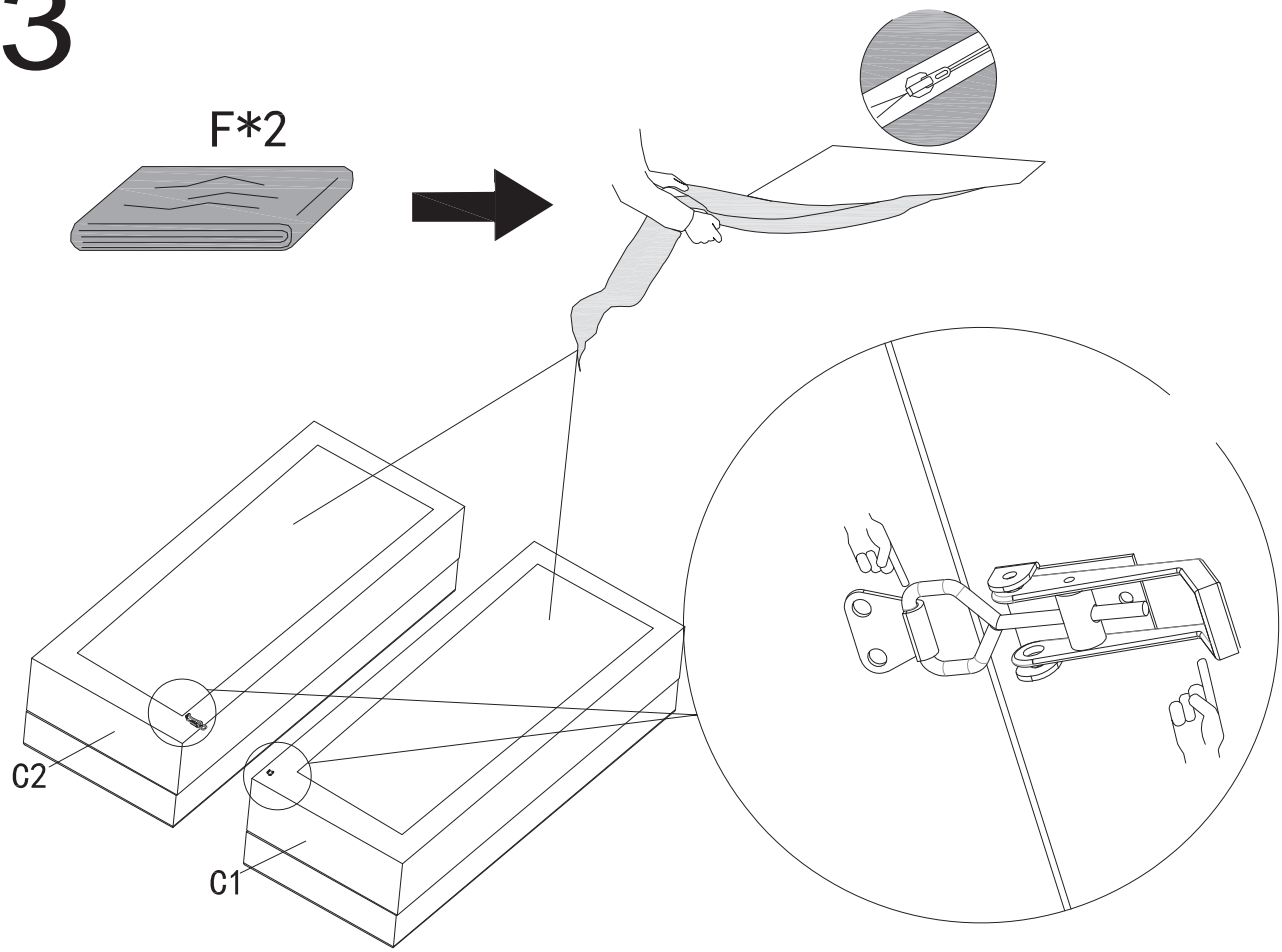

4

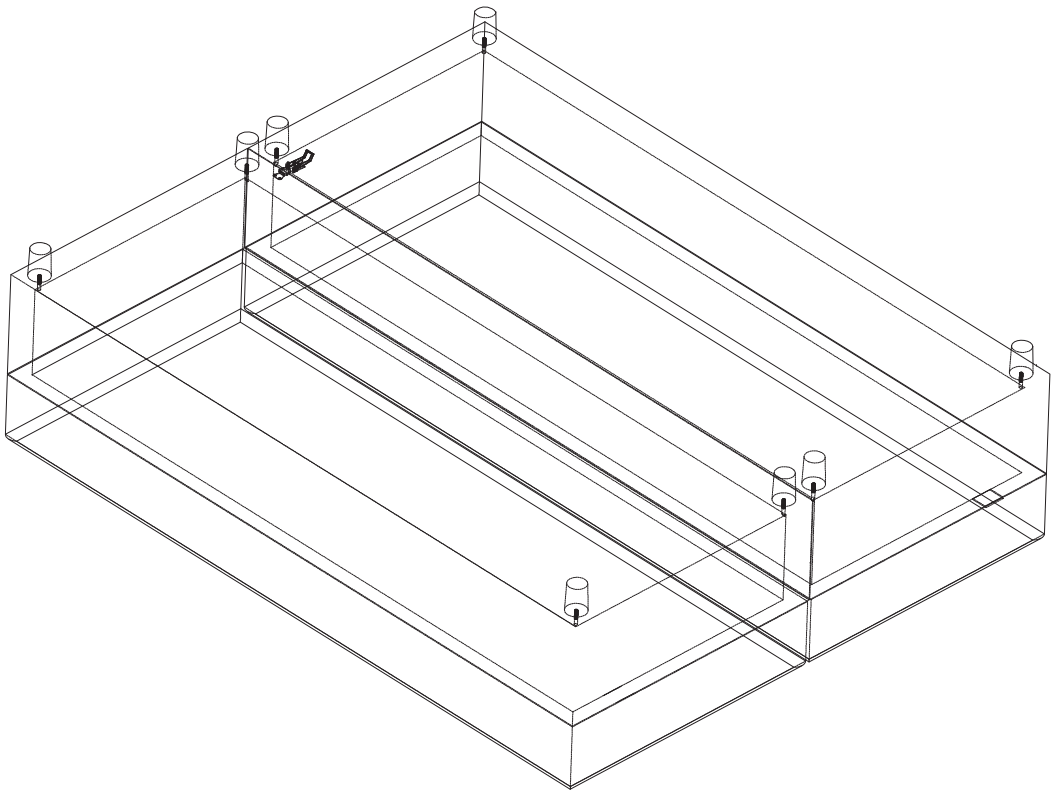

5

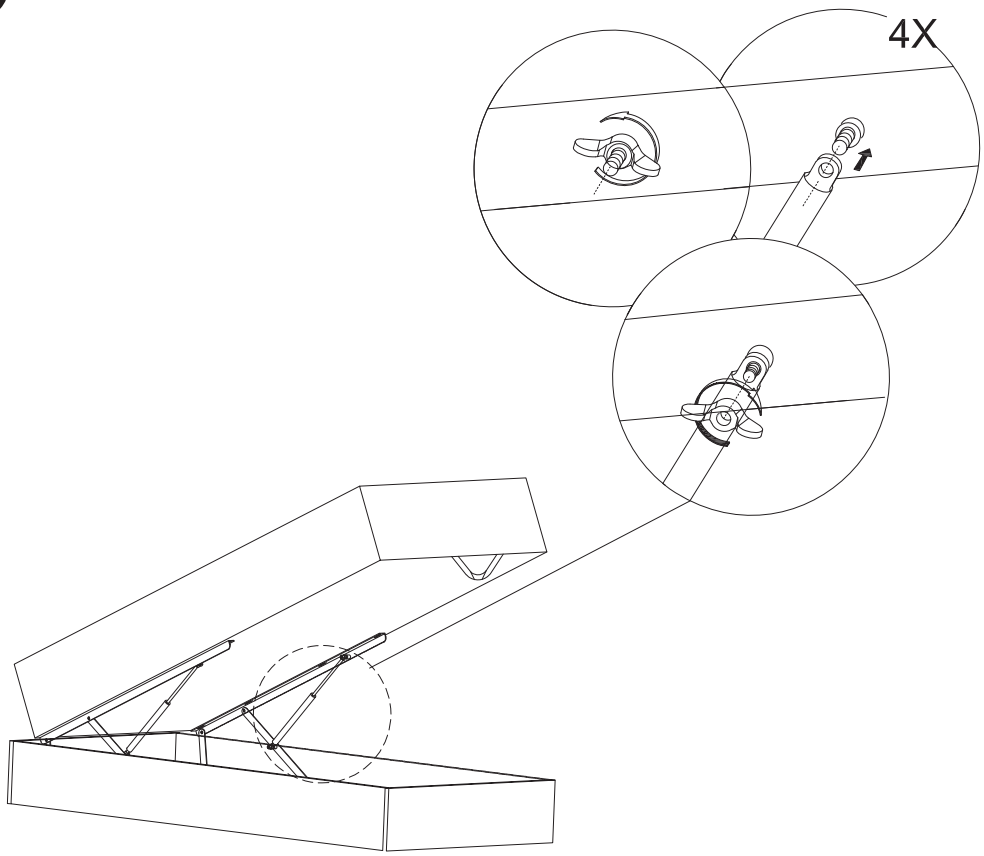

6

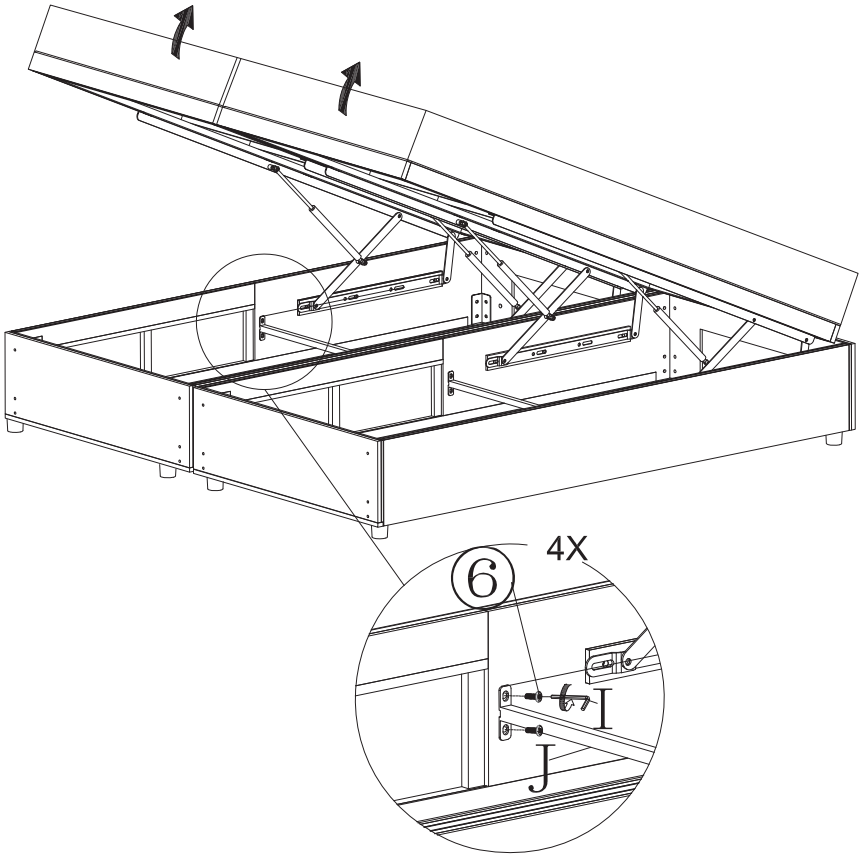

7

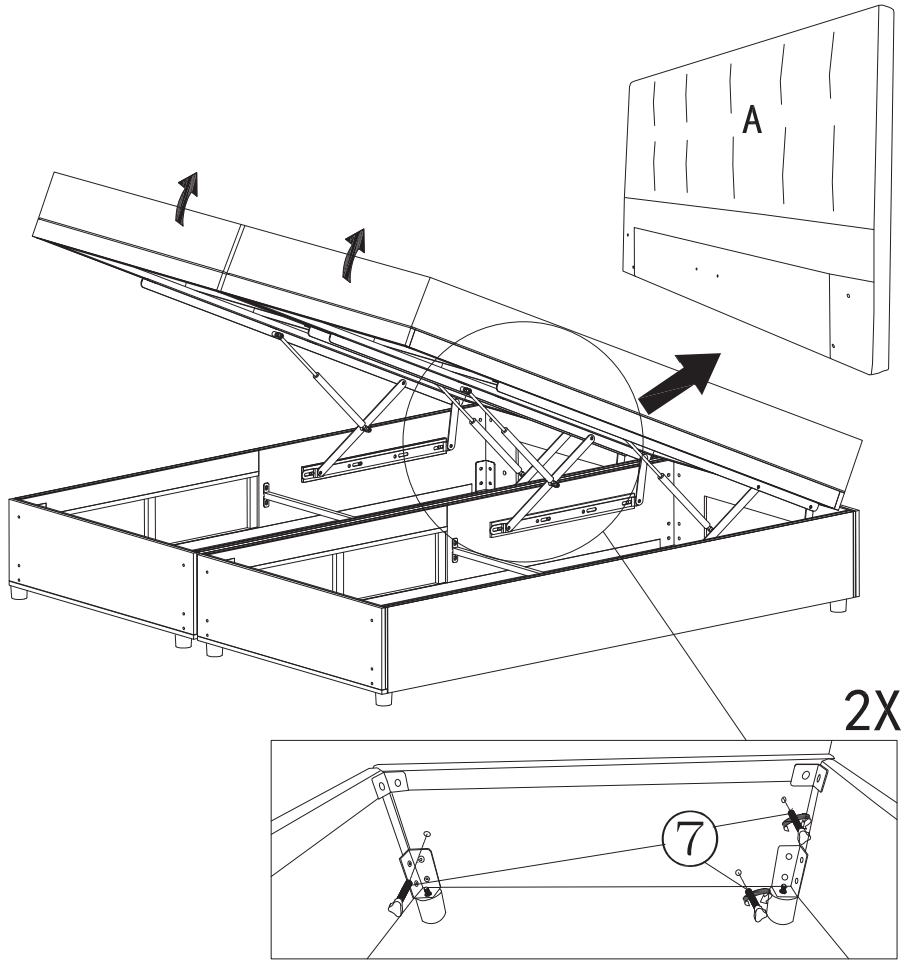

8

