ASSEMBLY INSTRUCTIONS

Diagram 1

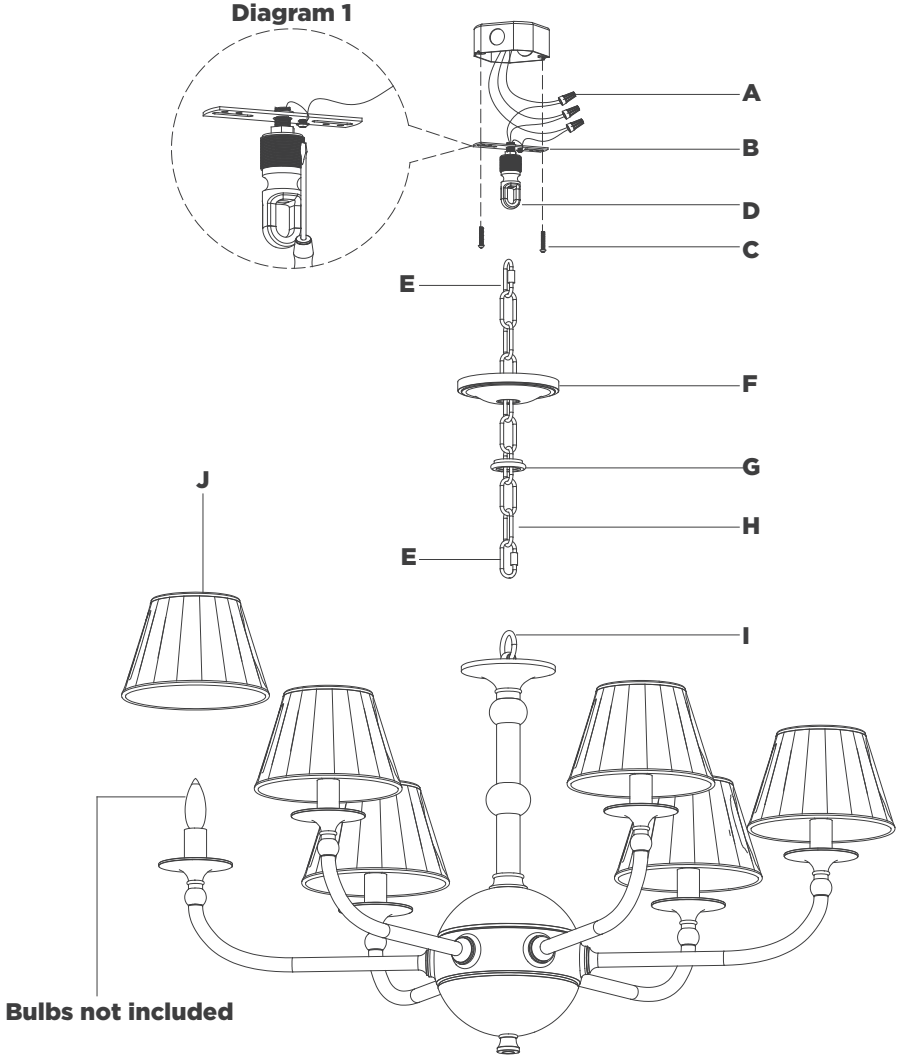

Embers 41" Chandelier

Item # RL5345

NOTICE:

This light fixture should be installed in accordance with all applicable, local installation codes, and by a person familiar with the construction and operation of it, as well as the hazards involved. Inspect item and contents carefully. If any damage or defect is found, do not install. Retain all packaging material until installation is complete and approved.

TOOLS REQUIRED (NOT INCLUDED):

Phillips Screwdriver	Slotted Screwdriver	Wire Strippers
Slip Joint Pliers	Measuring Tape	Chain Pliers
Wire Cutters		

---

1. Carefully remove all parts from the box. Place on a clean, soft surface.
2. Remove canopy **(F)** from mounting plate **(B)** by removing collar ring **(G)**.
3. Install mounting plate **(B)** to junction box and secure with mounting screws **(C)**.
4. Secure collar loop **(D)** to mounting plate **(B)** using pliers to tighten locknut.
5. Install canopy **(F)** to collar loop **(D)** and secure with collar ring **(G)**.
6. Determine desired overall length, and amount of chains **(H)** needed. Shorten chains using chain pliers. (Keep extra chain)
7. Attach chains **(H)** to hooks **(E)** and to fixture hooks **(I)**.
8. Thread fixture wire and ground wire through chain **(H)**.
   NOTE: When you reach the collar loop **(D)**, ensure there is no tension on the wires. Cut excess wires, being sure to leave enough to reach the junction box.
9. Separate two sides of molded wire, and strip insulation on each 5/8".

ASSEMBLY INSTRUCTIONS

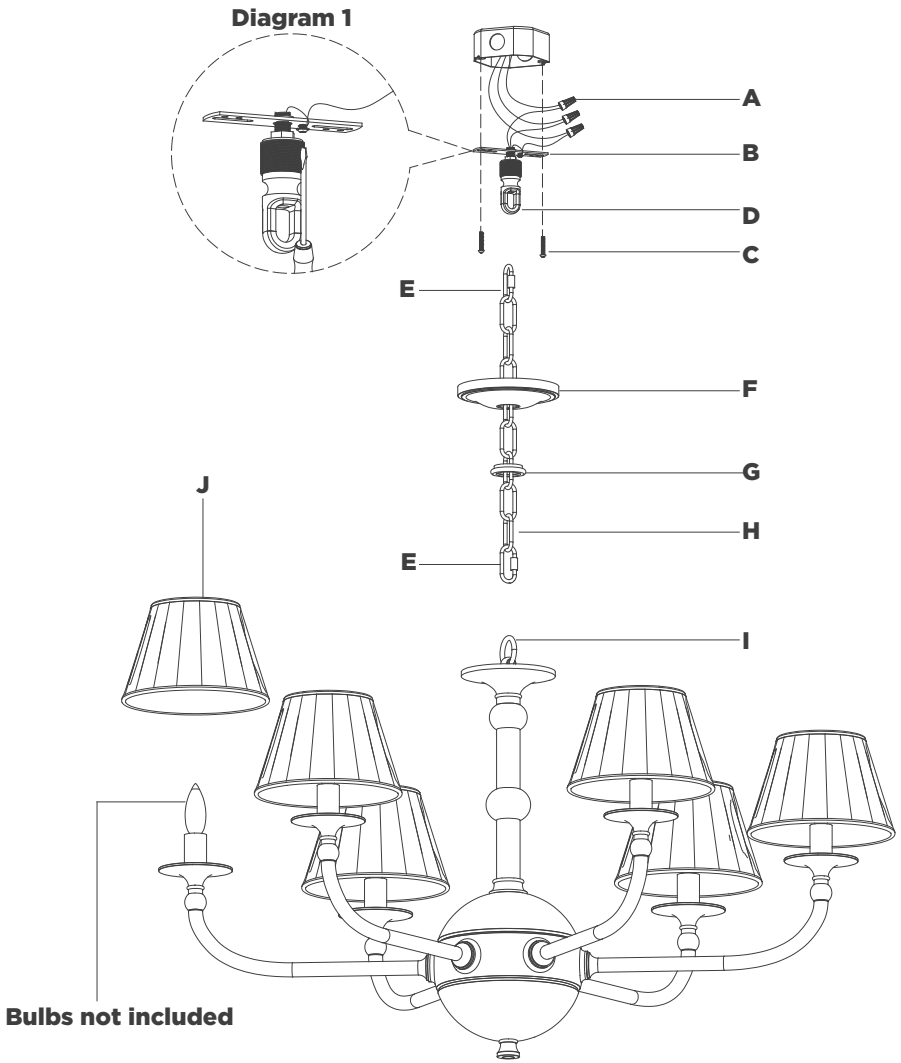

Embers 41" Chandelier

Item # RL5345

NOTICE:

This light fixture should be installed in accordance with all applicable, local installation codes, and by a person familiar with the construction and operation of it, as well as the hazards involved. Inspect item and contents carefully. If any damage or defect is found, do not install. Retain all packaging material until installation is complete and approved.

---

10. Loosen collar ring **(G)** and let canopy **(F)** slip down chain **(H)** carefully.
11. Twist all fixture wires together, and slip through center hole of collar loop **(D)**.
    NOTE: Untwist wires and separate to prepare for connection.
12. Wrap fixture ground wire (bare copper) around the green grounding screw (see diagram 1). Tighten. Continue fixture ground wire and connect to supply ground wire (usually green or bare copper) using wire nut **(A)**.
    NOTE: It is imperative that the fixture is grounded.
13. Connect fixture neutral wire (ribbed) to the supply neutral wire (usually white) using wire nut **(A)**.
14. Connect fixture hot wire (smooth with markings) to the supply hot wire (usually black) using wire nut **(A)**.
    CAUTION: Do not reverse the hot and neutral connections.
15. Make sure all wire connections are tight, then carefully tuck into the junction box.
16. Install canopy **(F)** to collar loop **(D)** and secure with collar ring **(G)**.
17. Install light bulbs into the sockets.
18. Clip shades **(J)** onto light bulbs.
    NOTE: If shade has additional packaging, carefully cut from interior of shade to avoid damage.

CARE INSTRUCTIONS: Clean only with a soft dry cloth or feather duster. Do not use abrasive or chemical agents.

RALPH LAUREN

Intertek DAMP LED 4