ASSEMBLY GUIDE

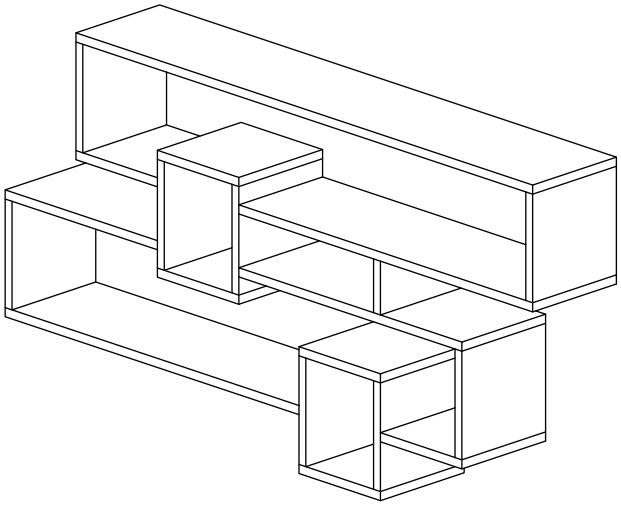

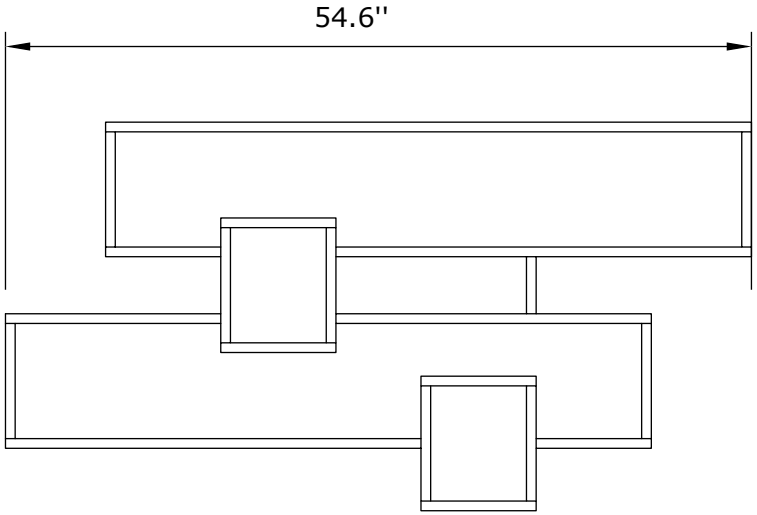

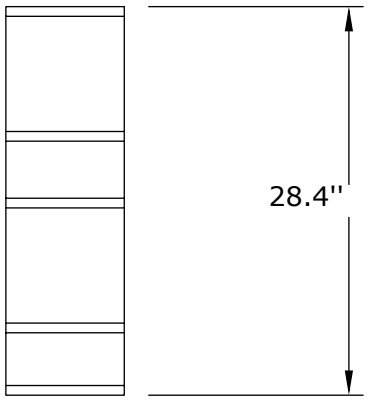

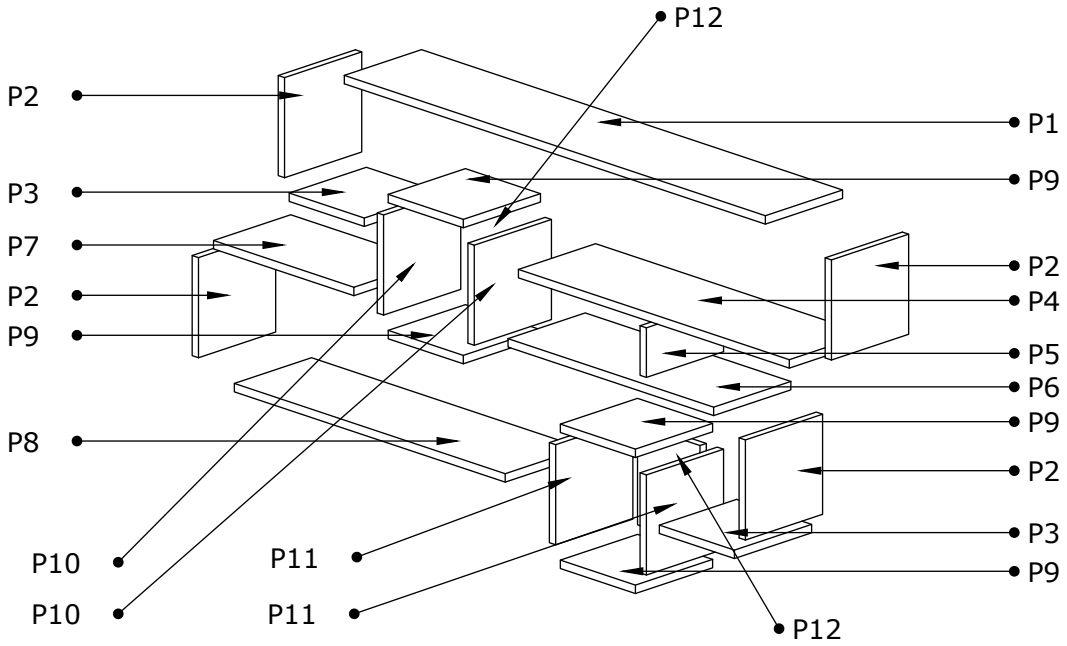

4*50 Screw

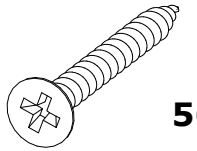

56 Pcs

Sticky Pan Walnuts

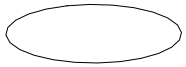

36 Pcs

Sticky Pan

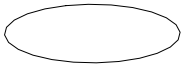

20 Pcs

Dowel

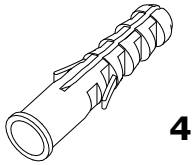

4 Pcs

L-Shaped Hanger

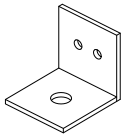

4 Pcs

4*70 Screw

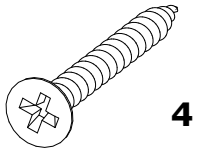

4 Pcs

3,5*18 Screw

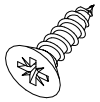

8 Pcs

Nail

30 Pcs

Dear Customer.

Before this product reached you, it was subjected to all kinds of controls and tests by us. Even in this case, it is possible for some parts to be damaged during transport. If you encounter such a situation, do not send the entire product back. Only request the damaged part. When requesting the necessary part, please identify it exactly by looking at the service card. The missing part will be sent to you as quickly as possible. Before starting the assembly, check all parts and accessories from the boxes according to the lists. Start the assembly after ensuring that the parts and accessories are complete and intact. Before starting the assembly, clean each part with a damp cloth. If you have purchased more than one product, complete the assembly of one product before moving on to the next to avoid any confusion. Never carry products by dragging them. Move the product by lifting and dismantling it with at least two people. For long-distance transportation, always carry the product in its package. The surfaces of the furniture you have purchased are very easy to clean. Wiping with a damp and soapy cloth or other household cleaners is sufficient. Since furniture is affected by extreme heat, cold, and humidity, do not let your furniture come into direct contact with these factors. Do not use your furniture for purposes other than its intended use.

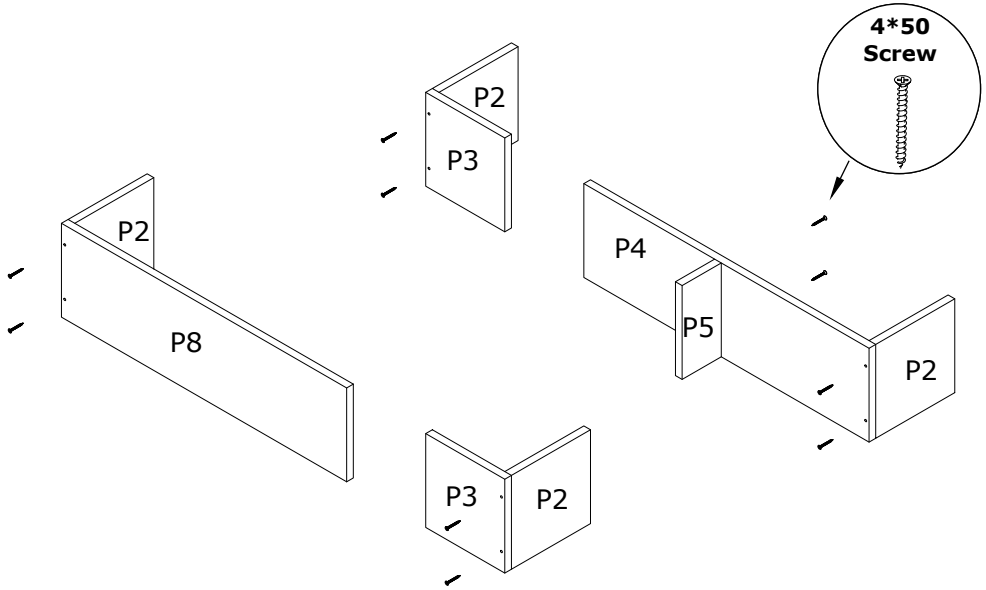
4*50
Screw
P2
P3
P2
P8
P4
P5
P2
P3
P2

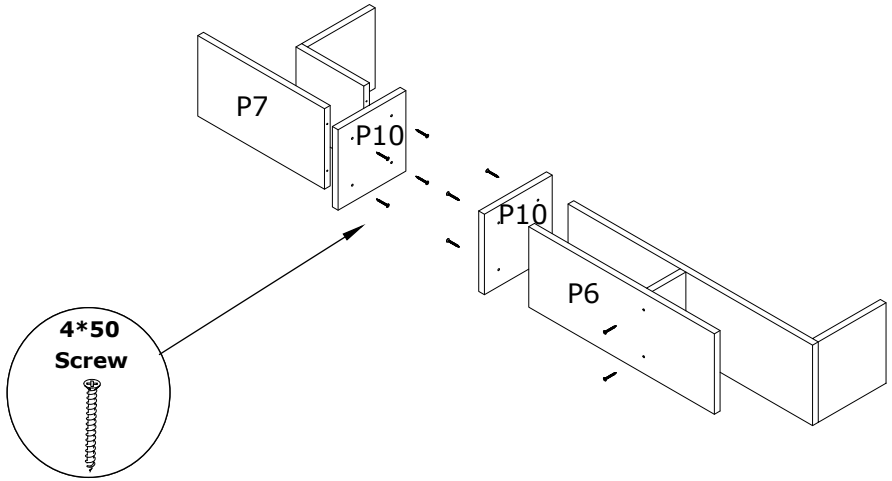
P7
P10
P10
P6
4*50
Screw

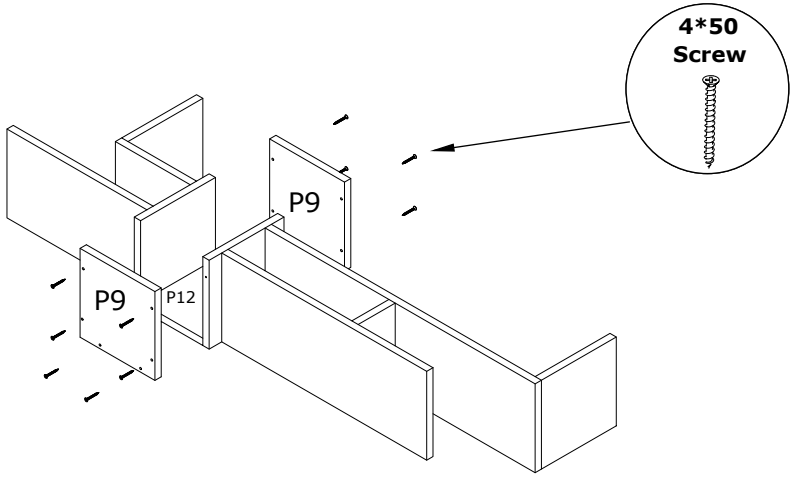
4*50
Screw
P9
P9
P12

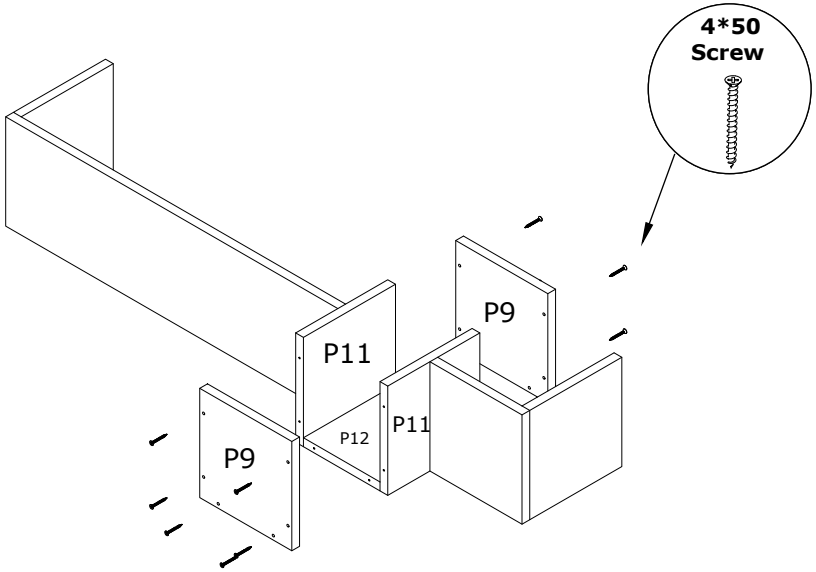
4*50
Screw
P9
P11
P11
P12
P9

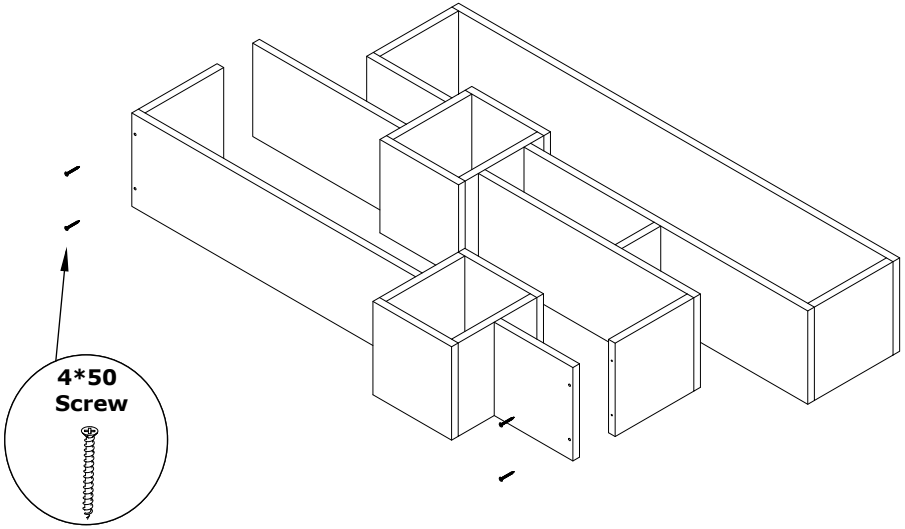
4*50
Screw

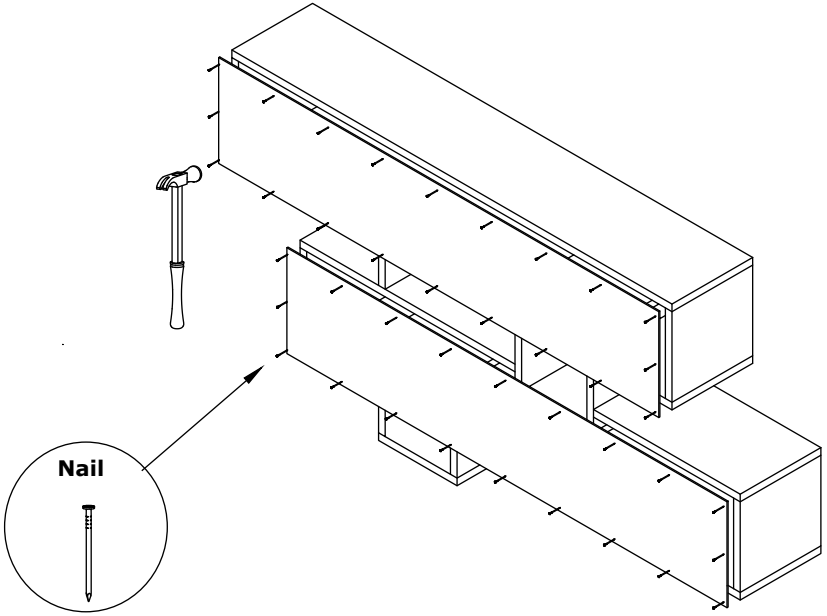
Nail

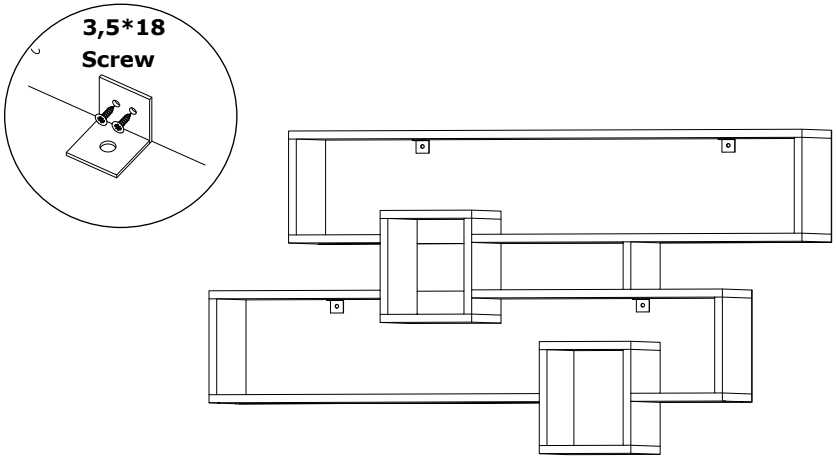
3,5*18
Screw

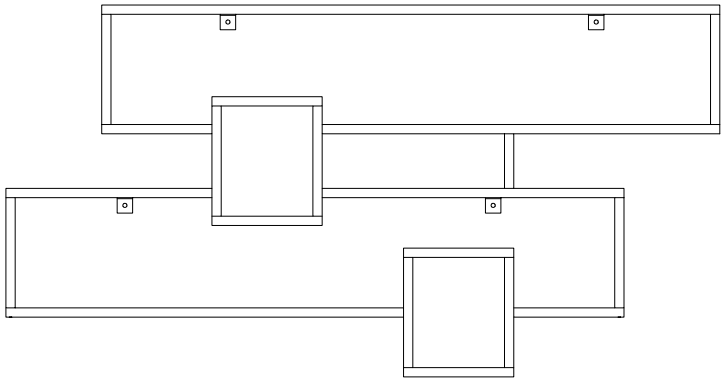

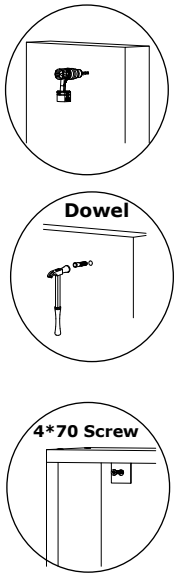
Dowel
4*70 Screw