Assembly Instruction

Thank you for purchasing this quality product! Make sure all components and small hardware parts are included in the package before you start to assemble the product.

MODEL:1224-8PC-3PWR-SEC-CHS-RAF

Components List

A	B	C	D	E	H
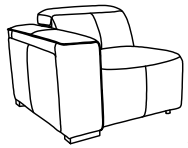		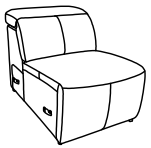	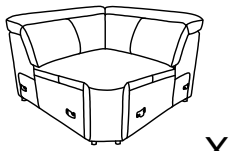	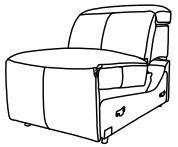	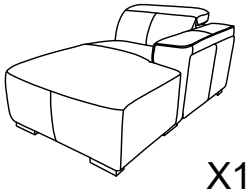
X1	X2	X1	X1	X2	X1

Step 1 Assemble hooks

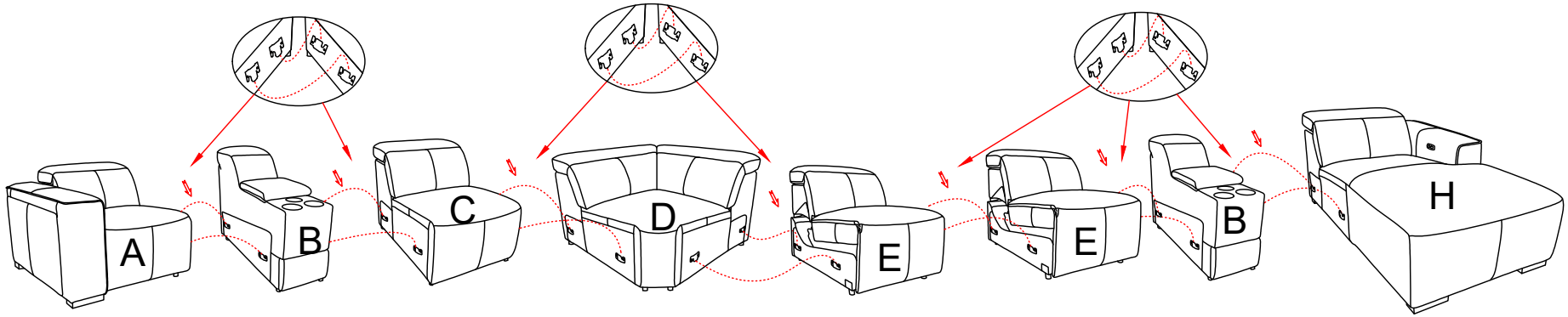

Step 2 Finished

