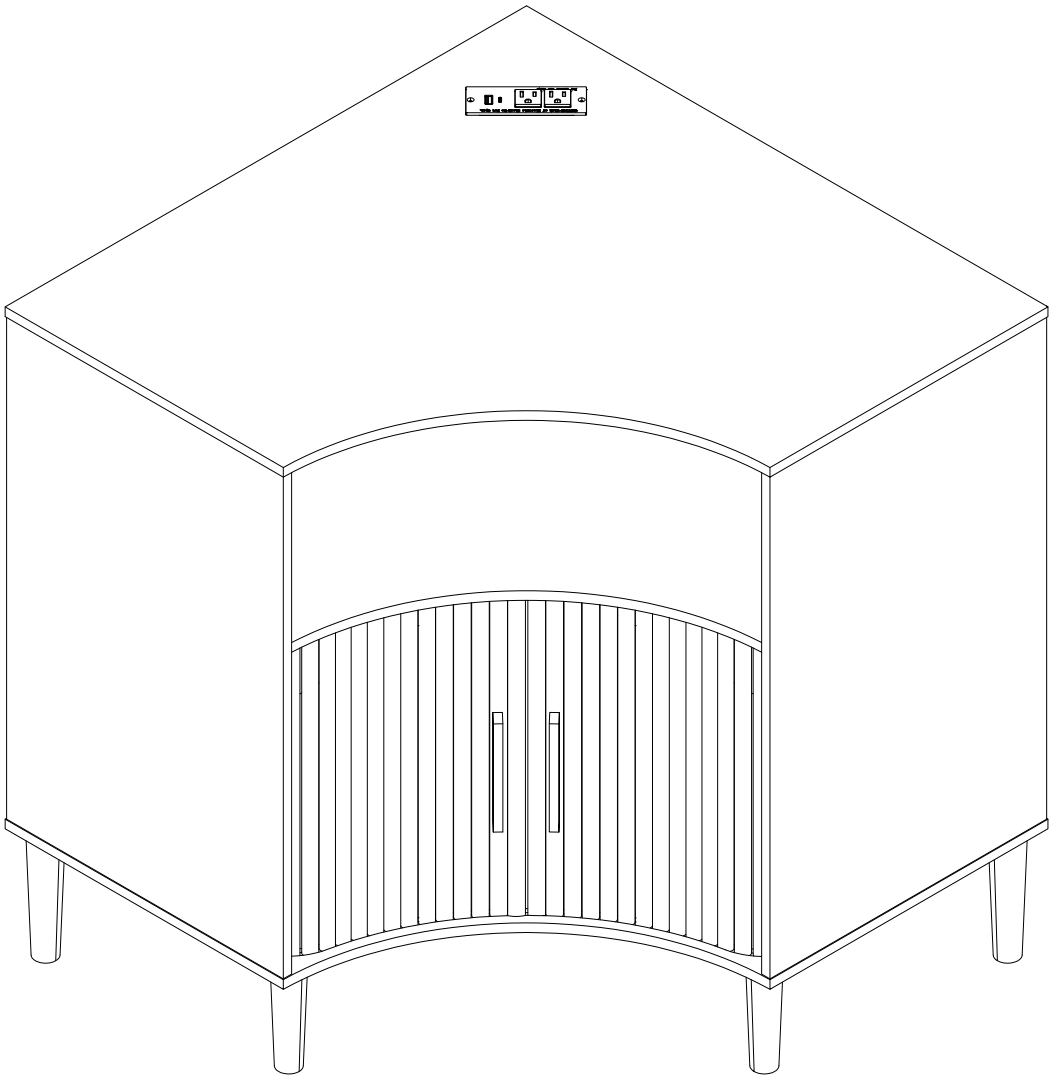

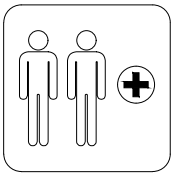

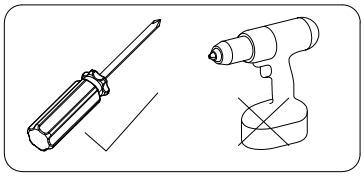

ASSEMBLY INSTRUCTIONS

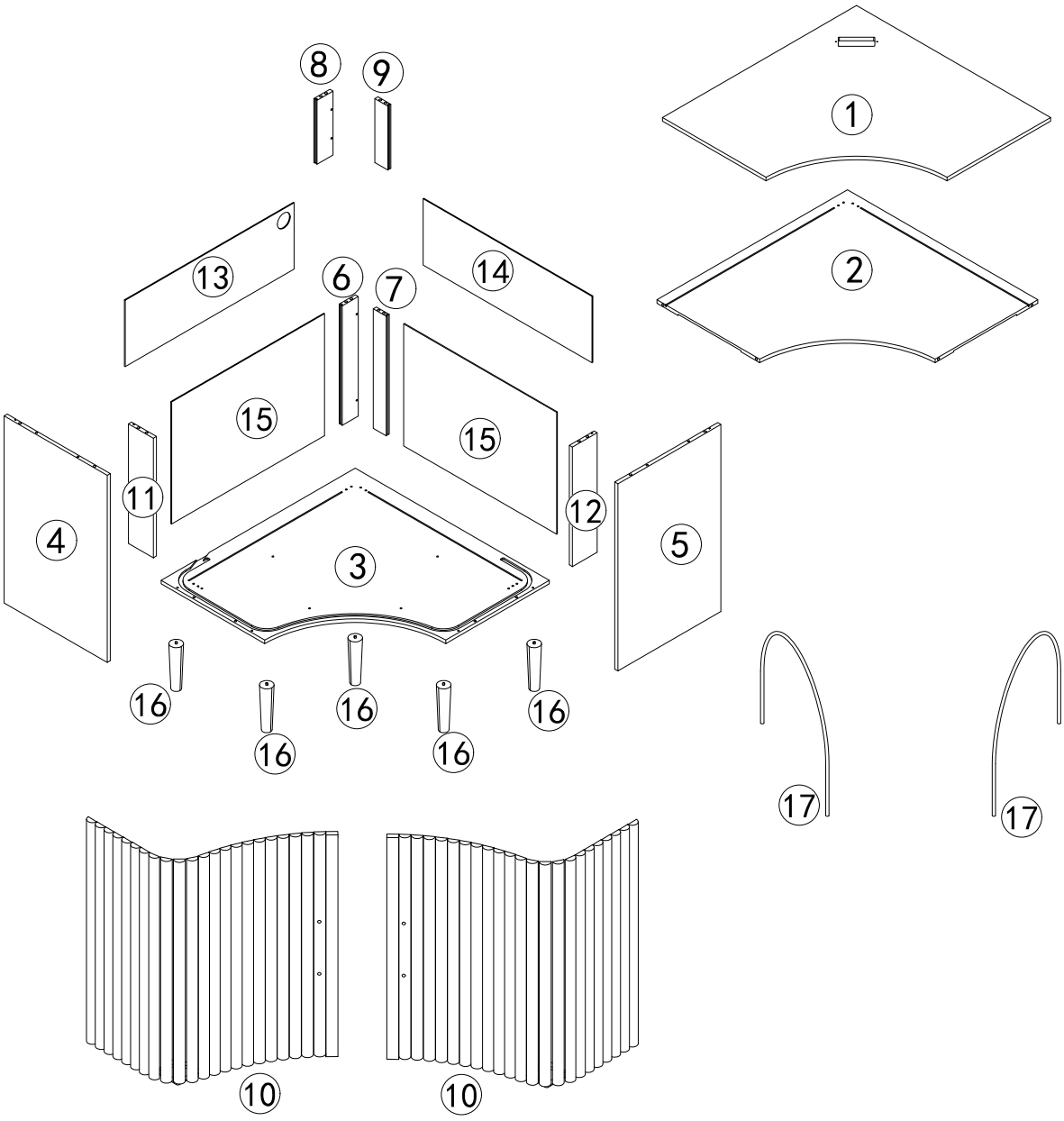

IMPORTANT:

1.Do not tighten bolts / screws completely until all bolts / screws are lined up and inserted into holes

2.Do not over tighten screws and bolts to avoid stripping

3.Please use hand tools to assemble this product, you can also use power tools (please use powertools carefully)

4.in case of packaging damage during transportation, missing components, or the need for installationguidance, don't rush, feel free to reach out to our dedicated seller support team for professionalassistance.

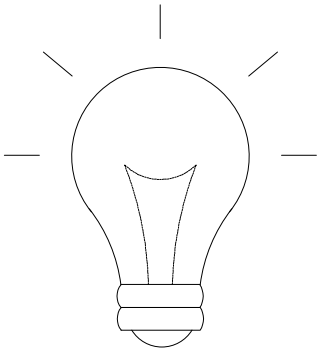

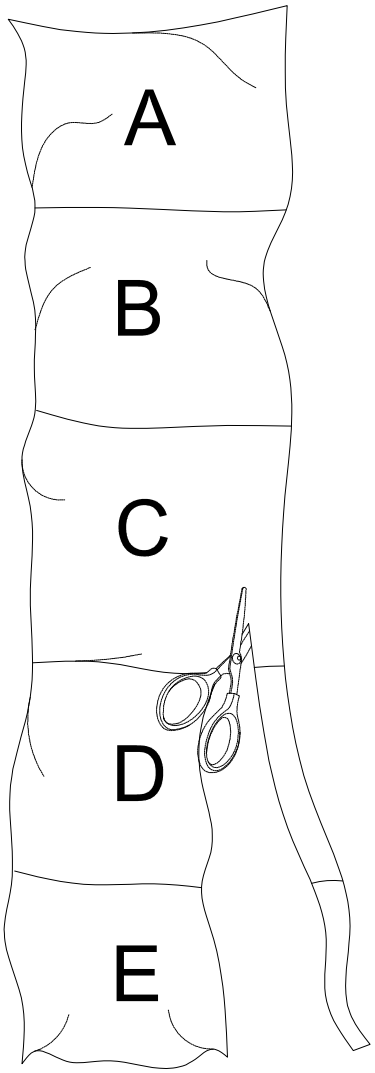

friendly reminder

To avoid errors and confusion during the installation of accessories, use the type and quantity of hardware accessories according to the installation procedure described in the instructions. First, unroll the accessories bag and lay out the hardware accessories, cut holes in the side, and take out the hardware accessories

A	x12
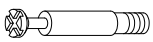	
M6*35mm	

B	x12
	
∅15mm	

C	x20
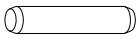	
∅6*30mm	

D	x39
	
∅3.5*12mm	

E	x17
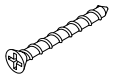	
∅4*35mm	

F	x4
	
∅12mm	

G	x5
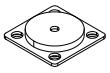	

H	x2

I	x4
	
M4*12mm	

J	x1
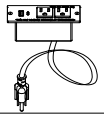	

K	x4
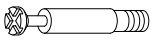	
M6*25mm	

L	x16
	

M	x1
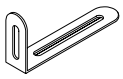	

N	x1
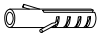	

O	x1
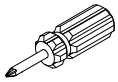	

INSTALLATION

1.

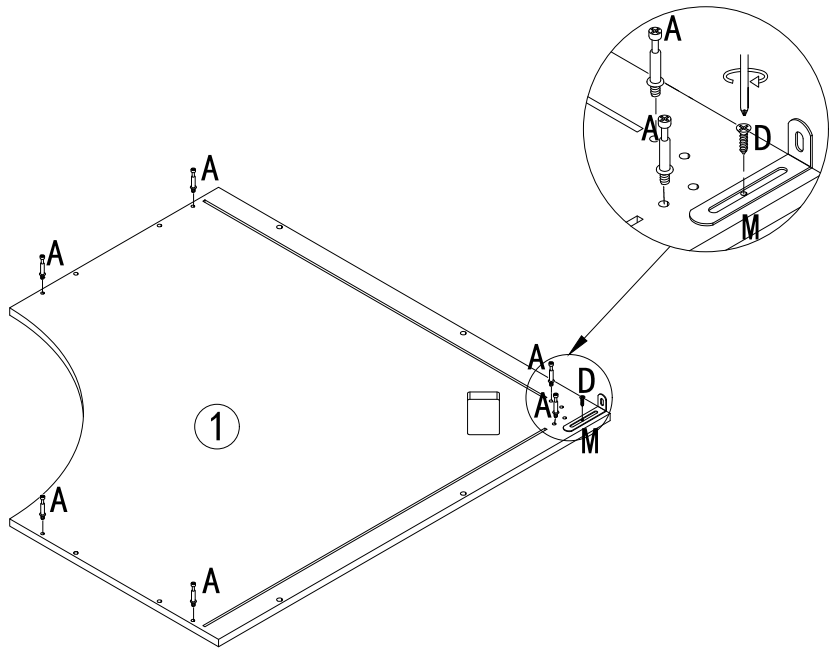

D	x1	M	x1	A	x6
		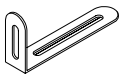		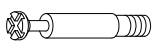	
∅3.5*12mm				M6*35mm	

2.

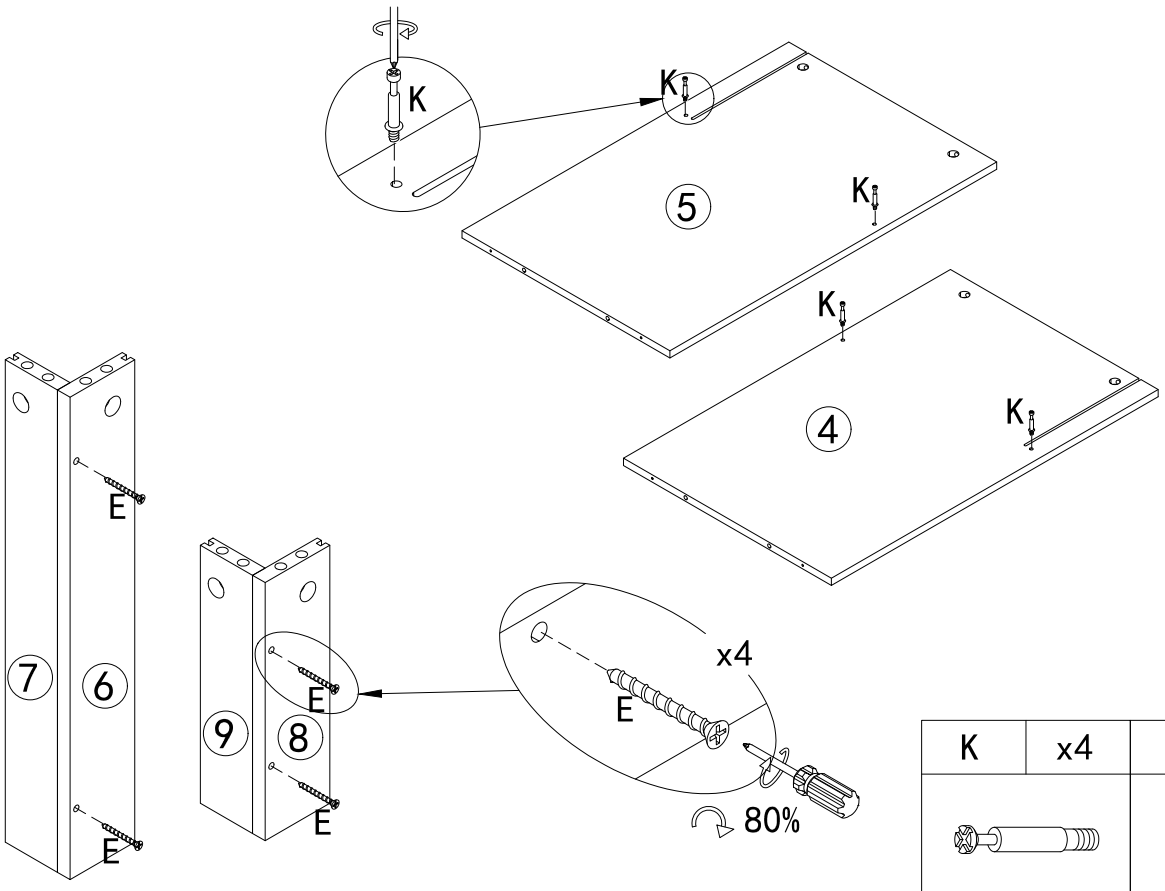

K	x4	E	x4
		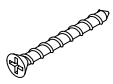	
M6*25mm		∅4*35mm	

INSTALLATION

3.

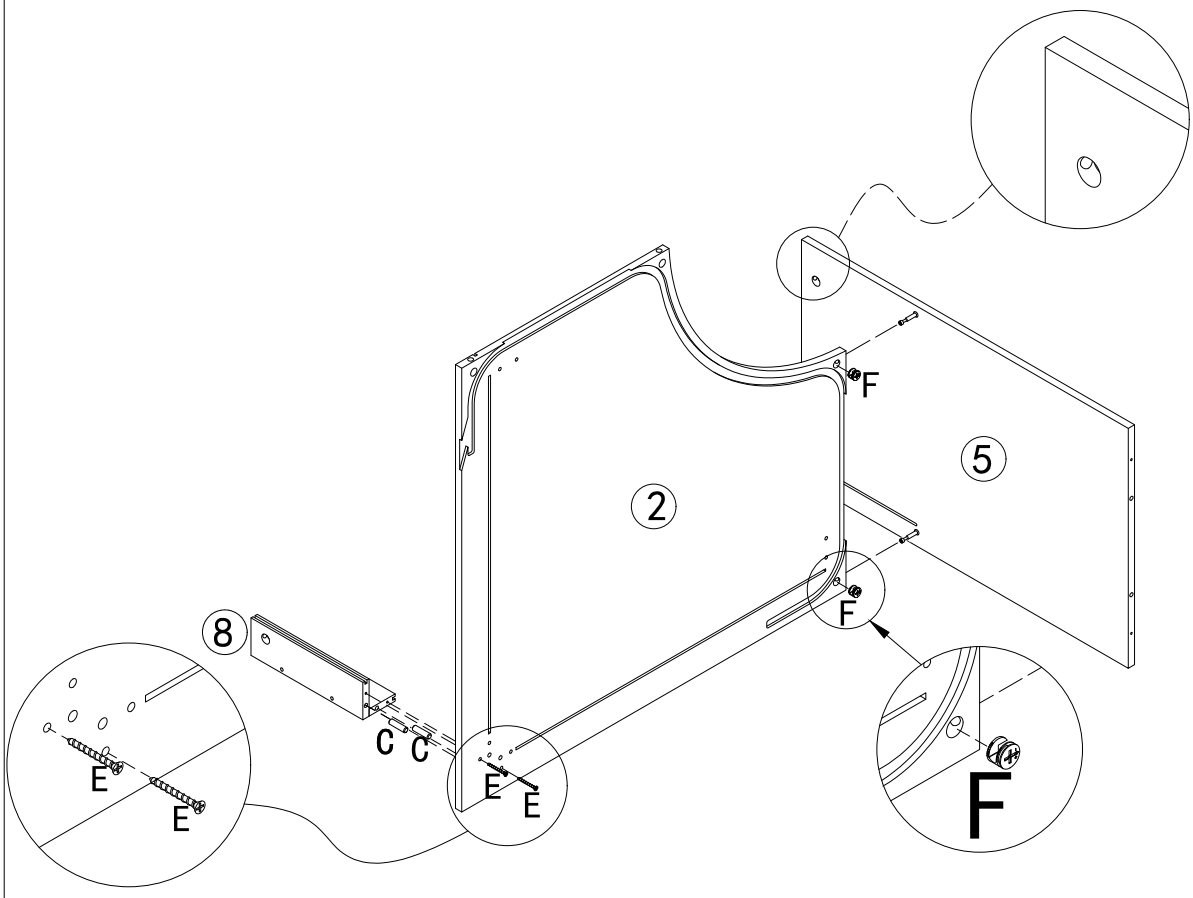

C	x2
∅6*30mm	
E	x2
∅4*35mm	
F	x2
∅12mm	

4.

This step requires two people for installation.

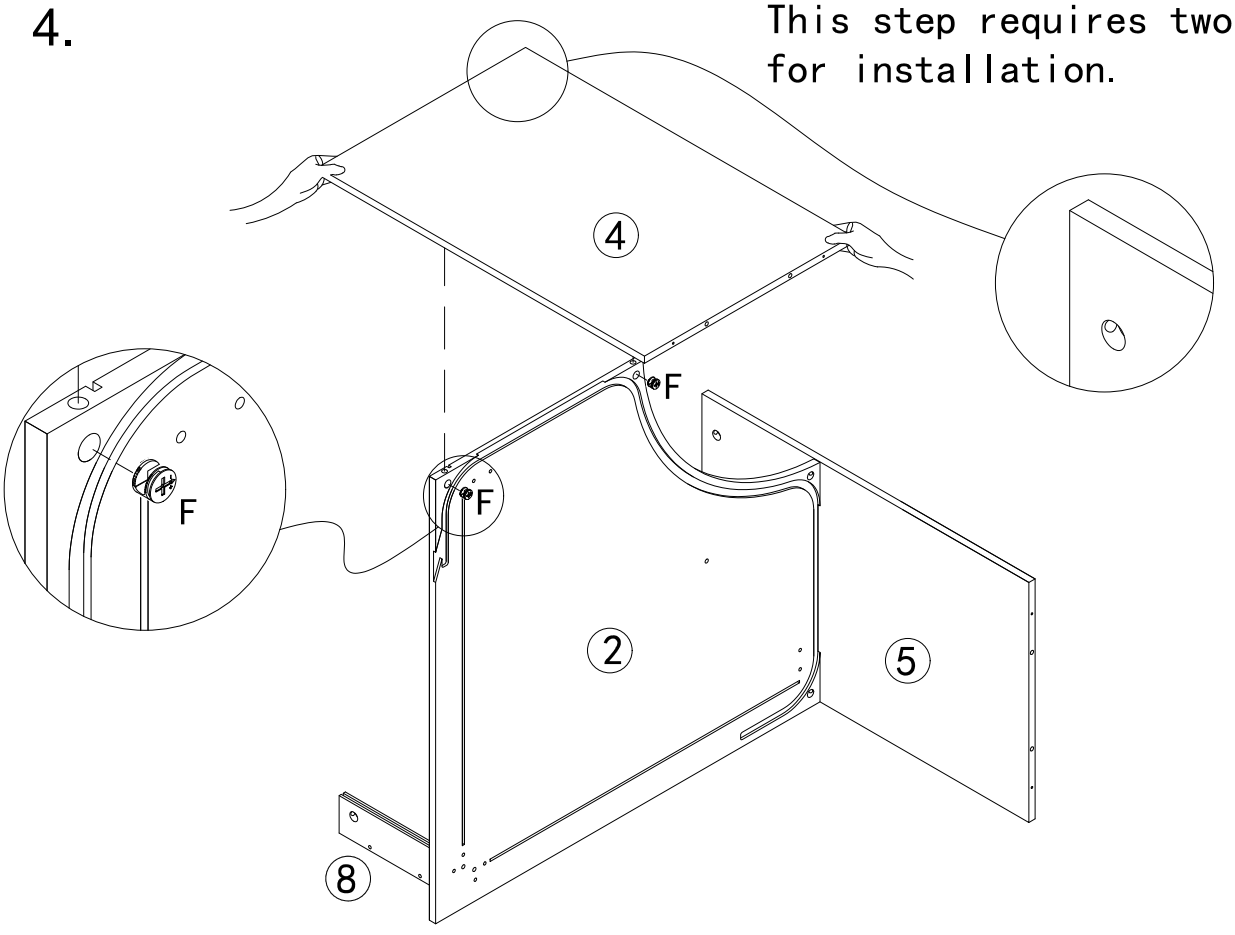

F	x2
∅12mm	

5.

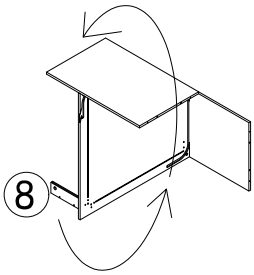

When flipping the cabinet, be careful not to bump or scratch Panel No.8.

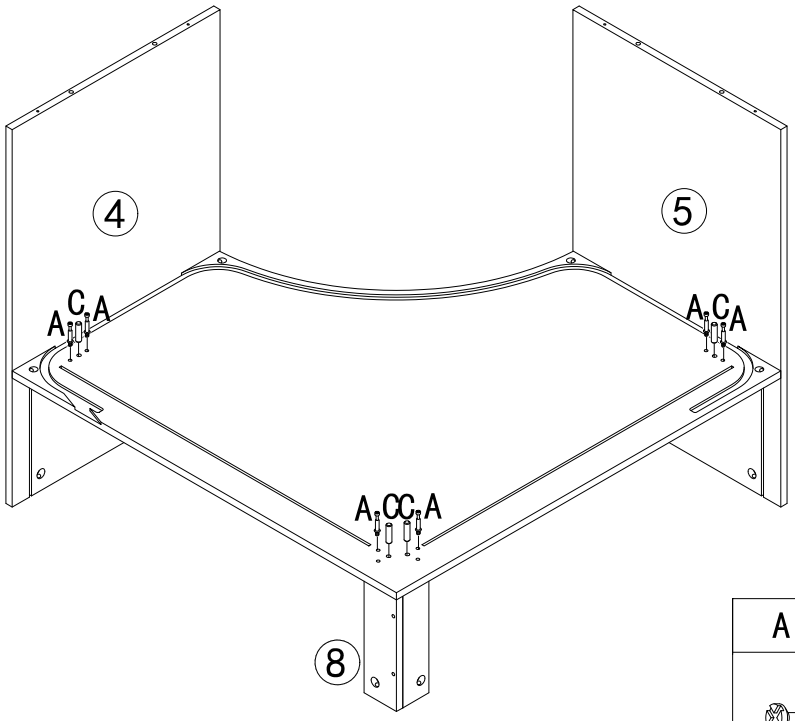

A	x6	C	x4
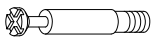			
M6*35mm		∅6*30mm	

6.

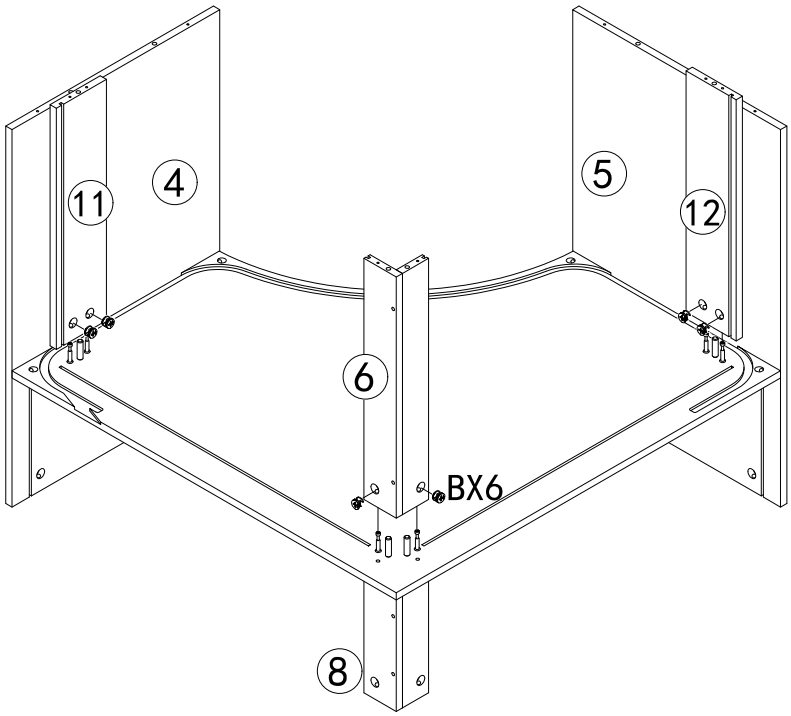

B	x6
	
∅15mm	

7.

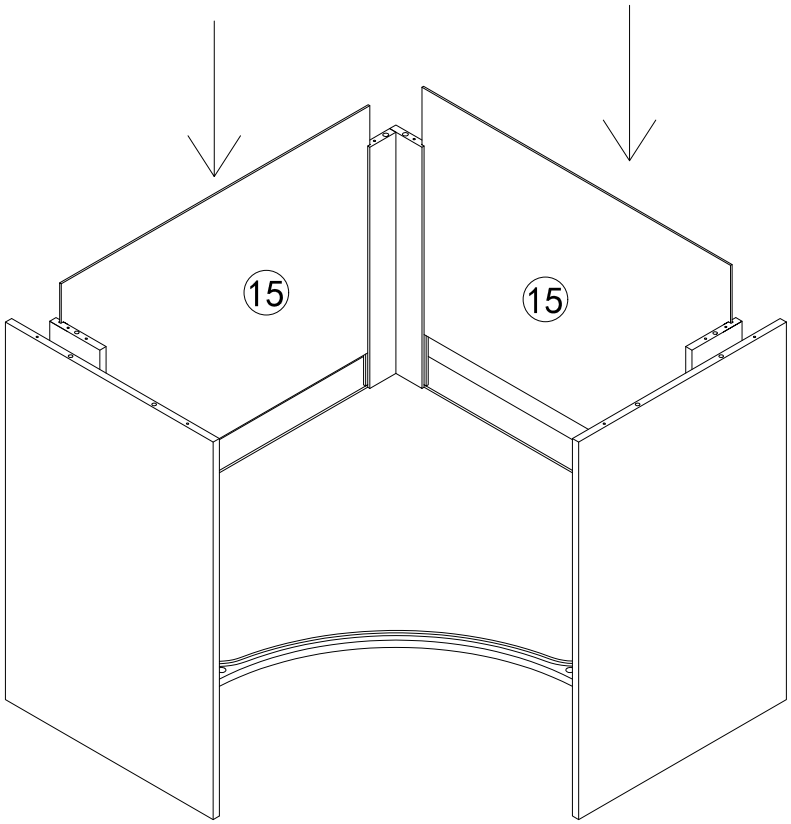

8.

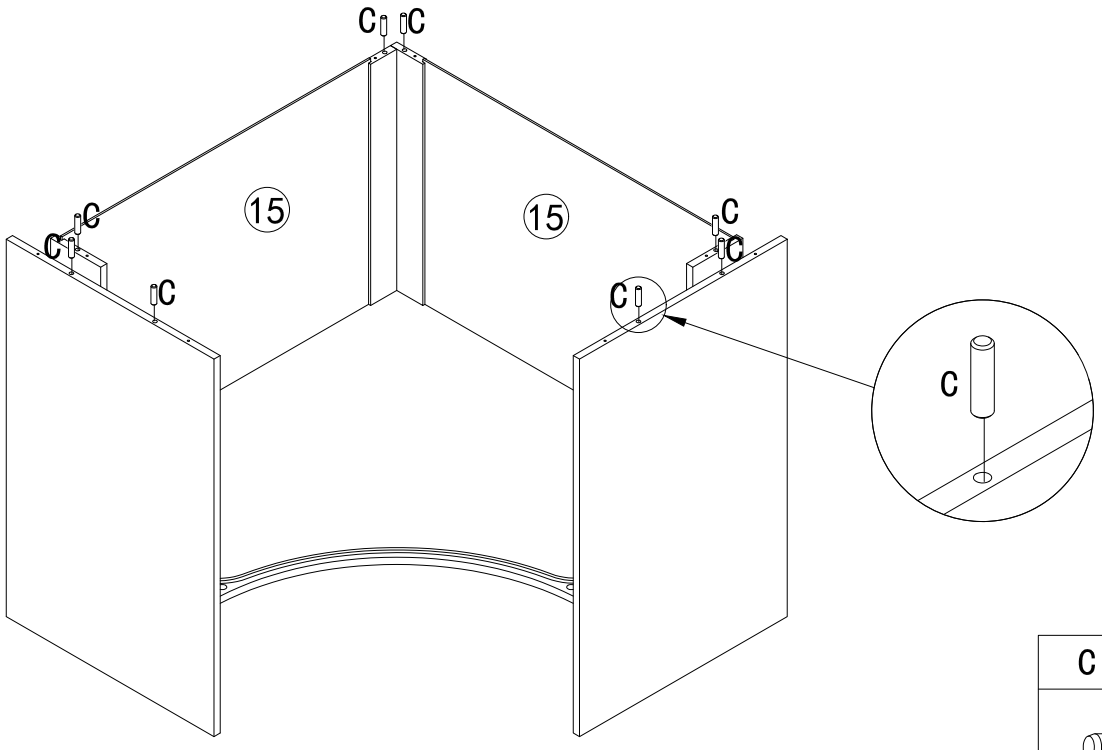

C	x8
∅ 6*30mm	

INSTALLATION

9.

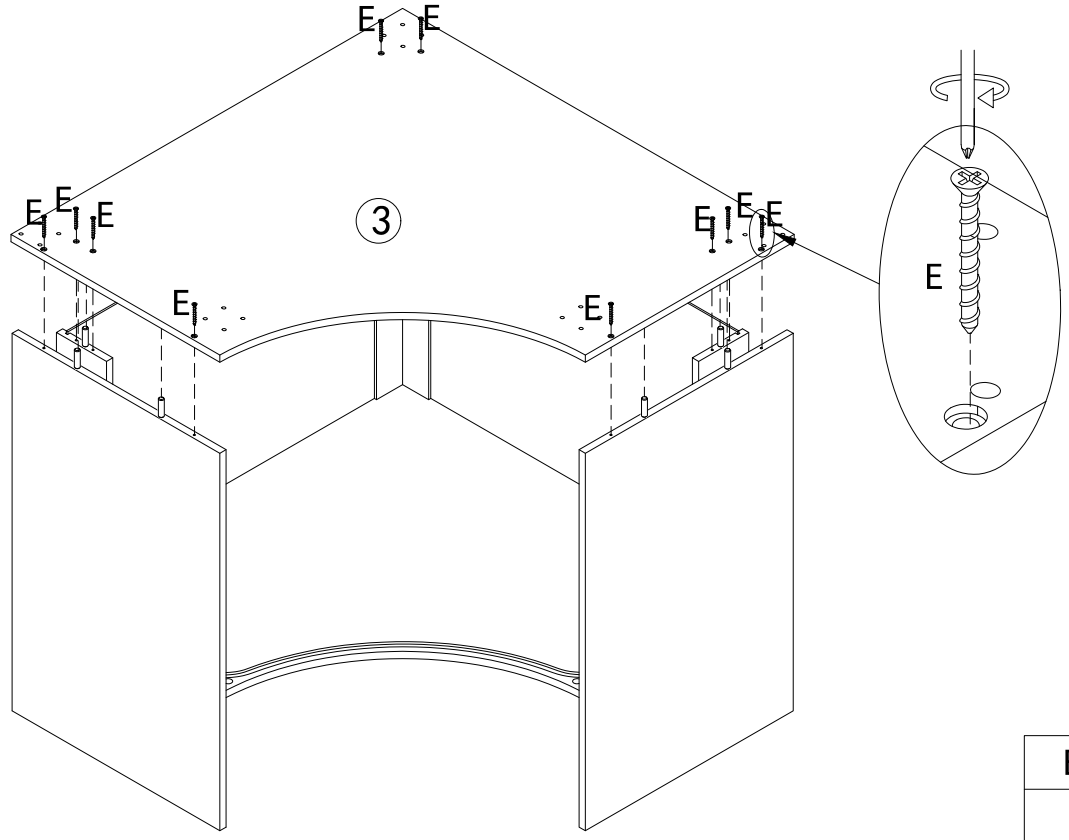

E	x10
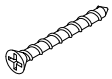	
∅4*35mm	

10.

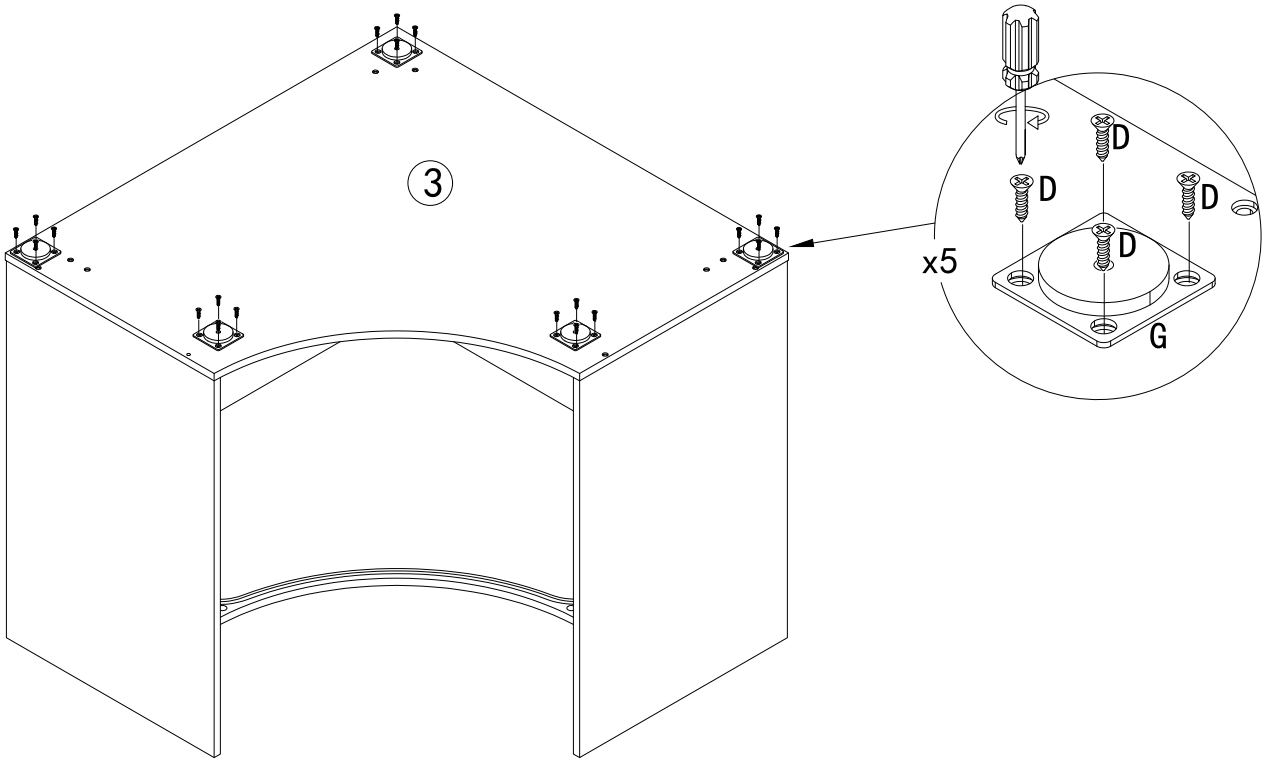

G	x5	D	x20
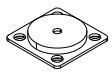			
		∅3.5*12mm	

11.

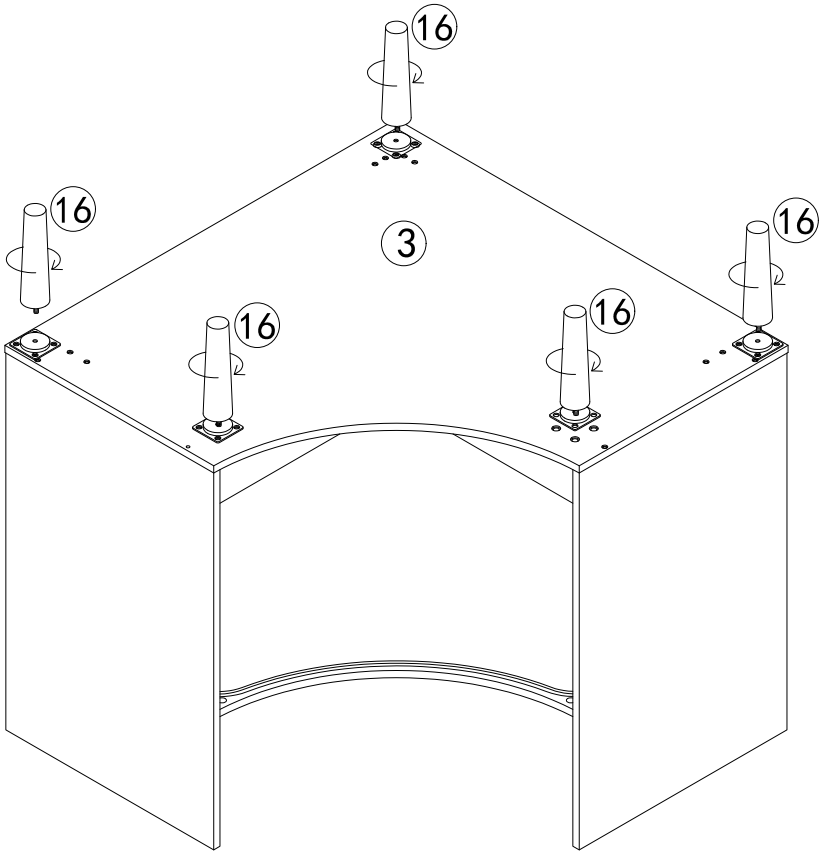

12.

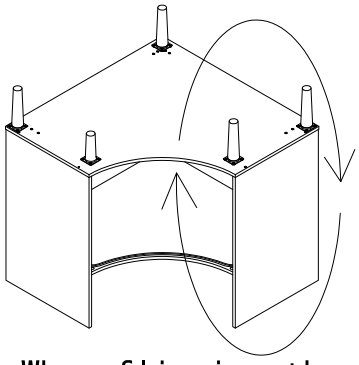

When flipping the cabinet, be careful not to bump its legs.

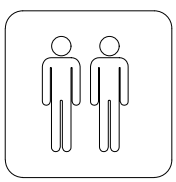

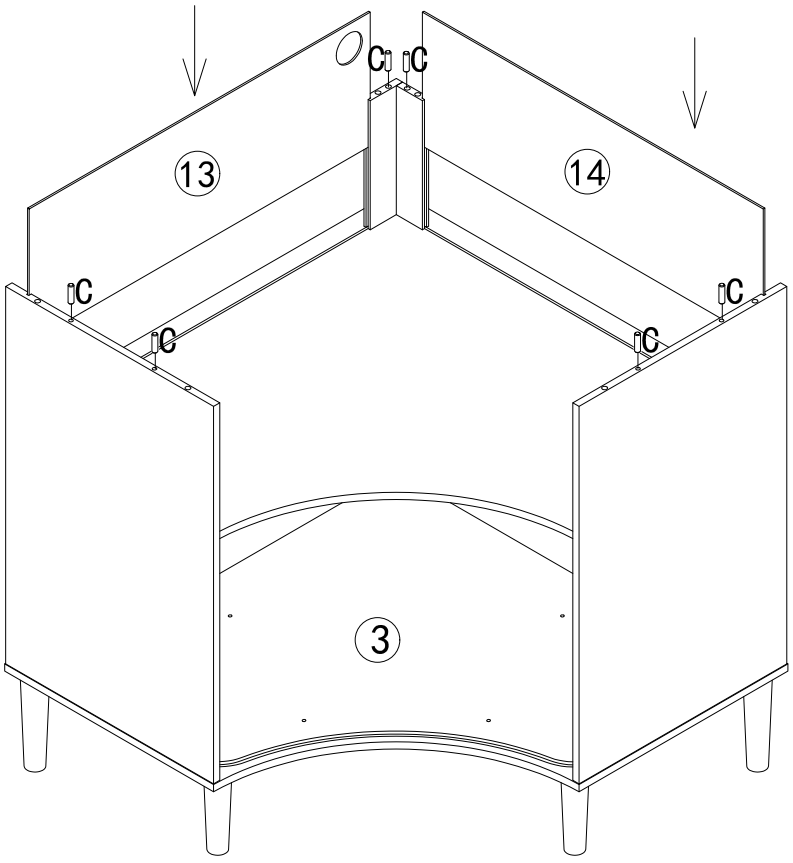

C	x6
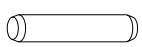	
∅6*30mm	

INSTALLATION

13.

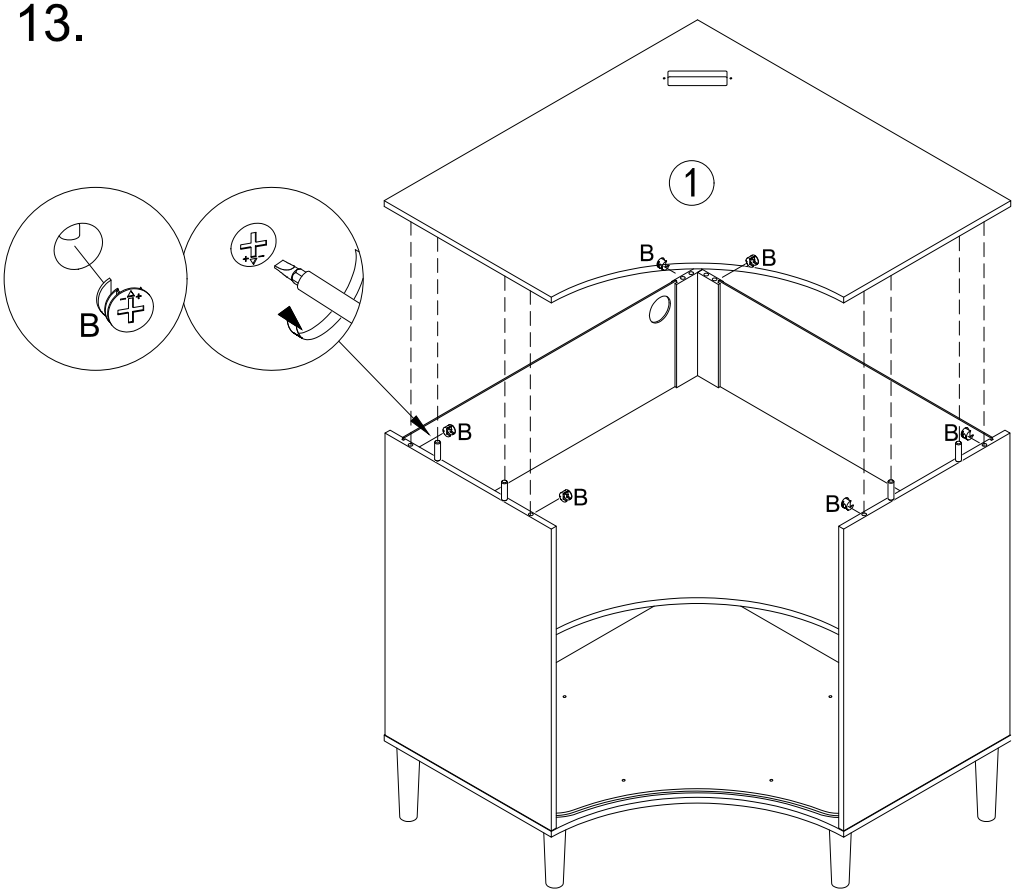

B	x6
	
∅15mm	

14.

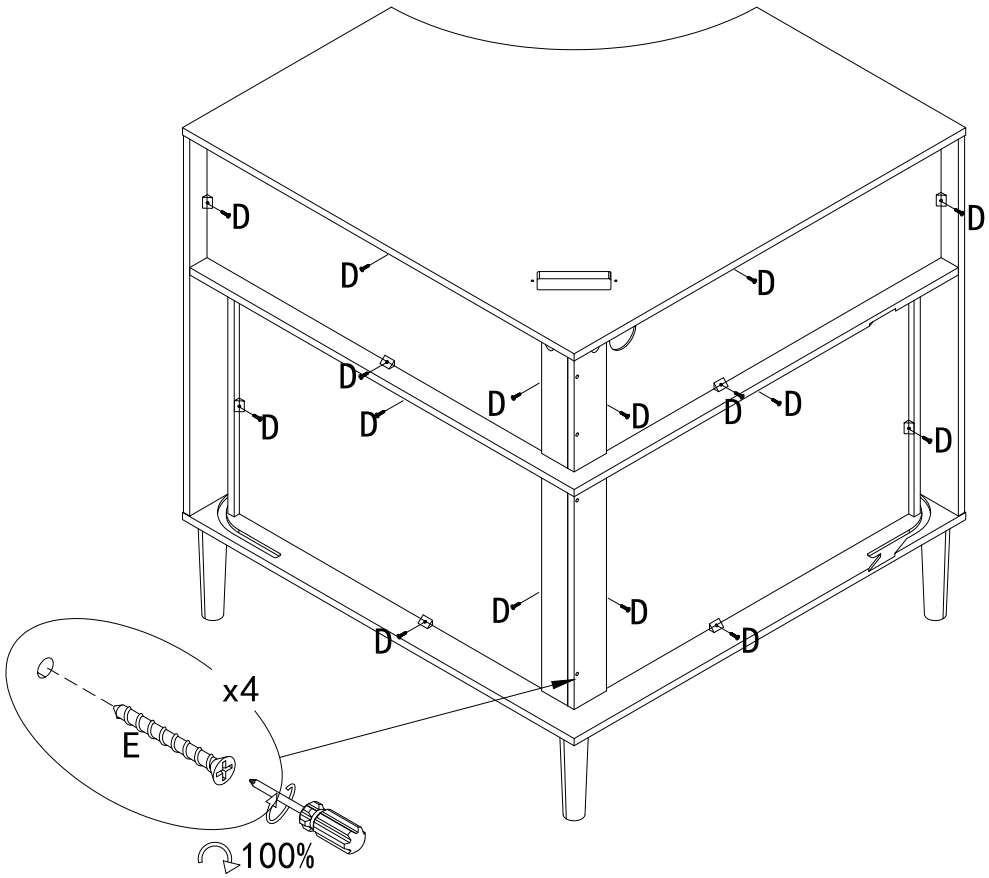

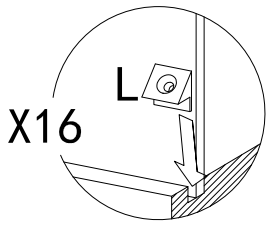

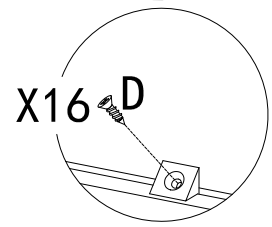

D	x16	L	x16
			
∅3.5*12mm			

15.

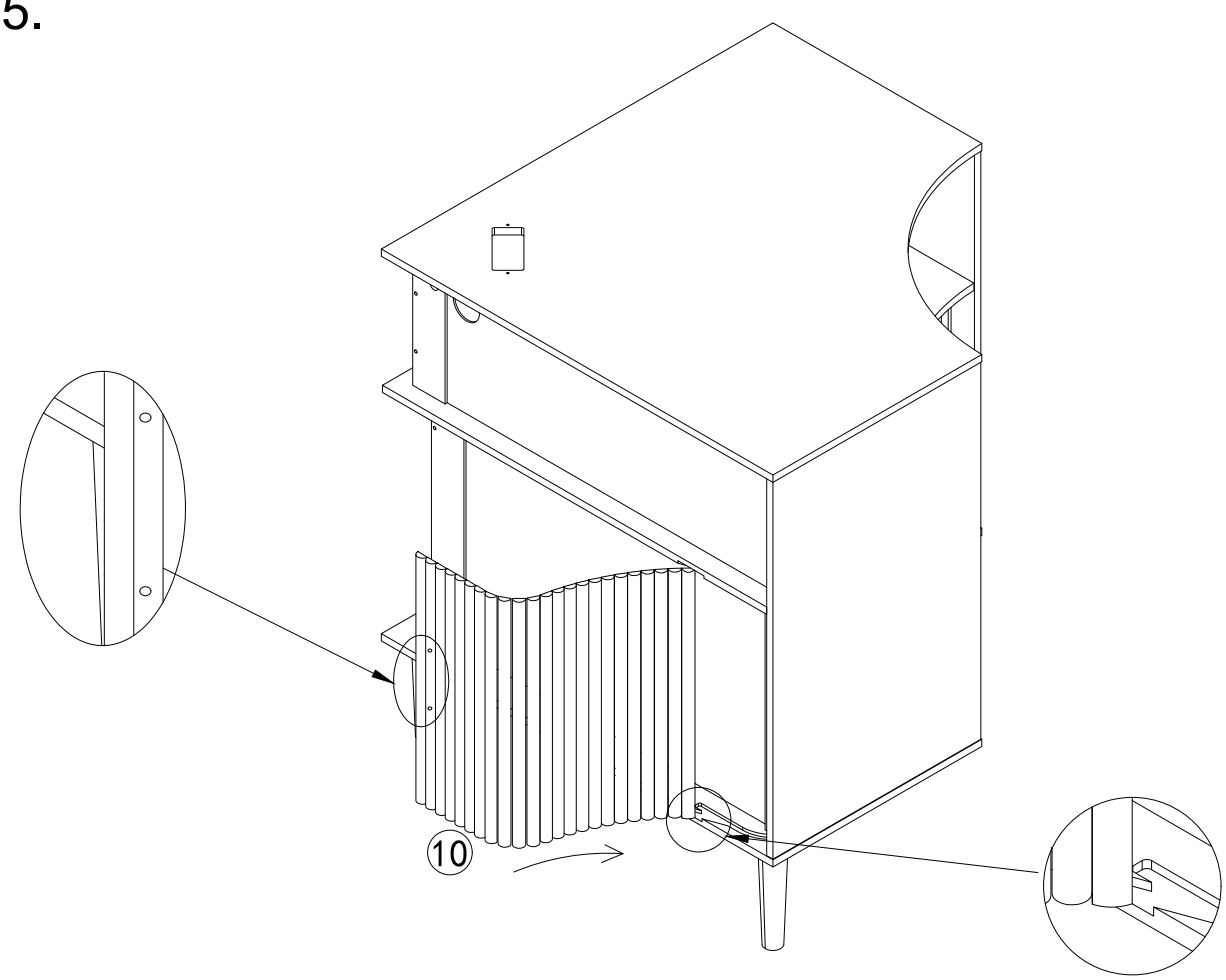

16.

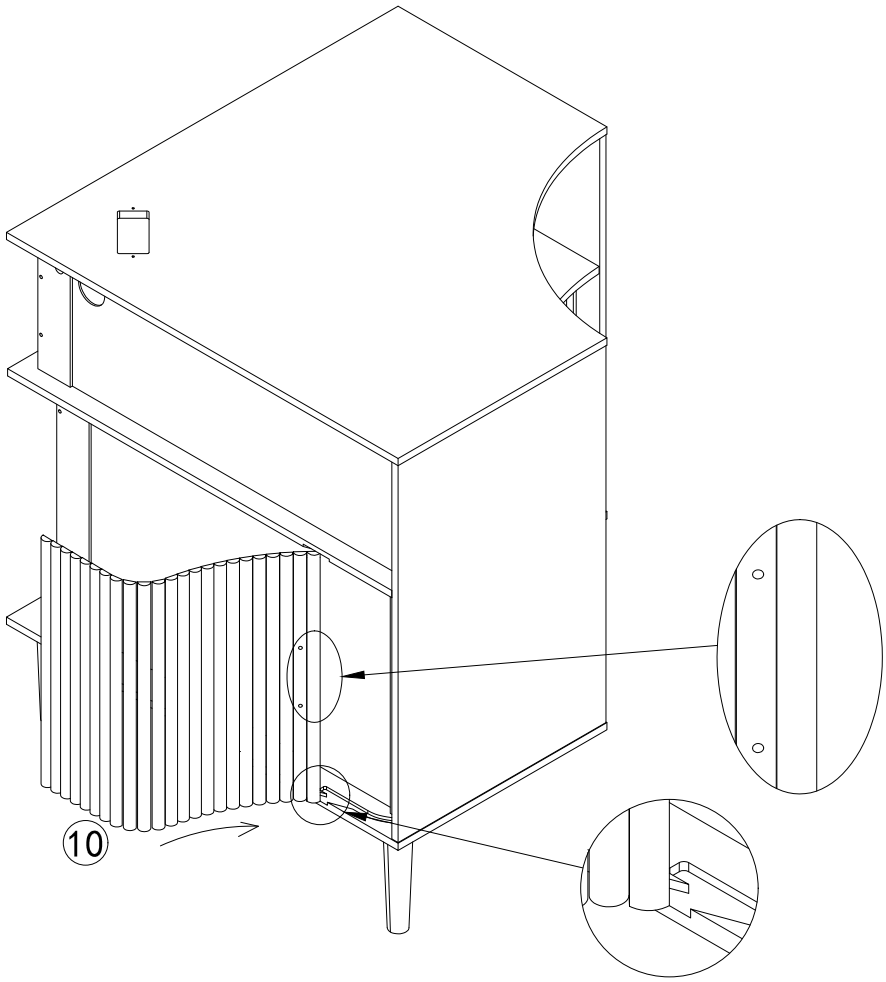

INSTALLATION

17.

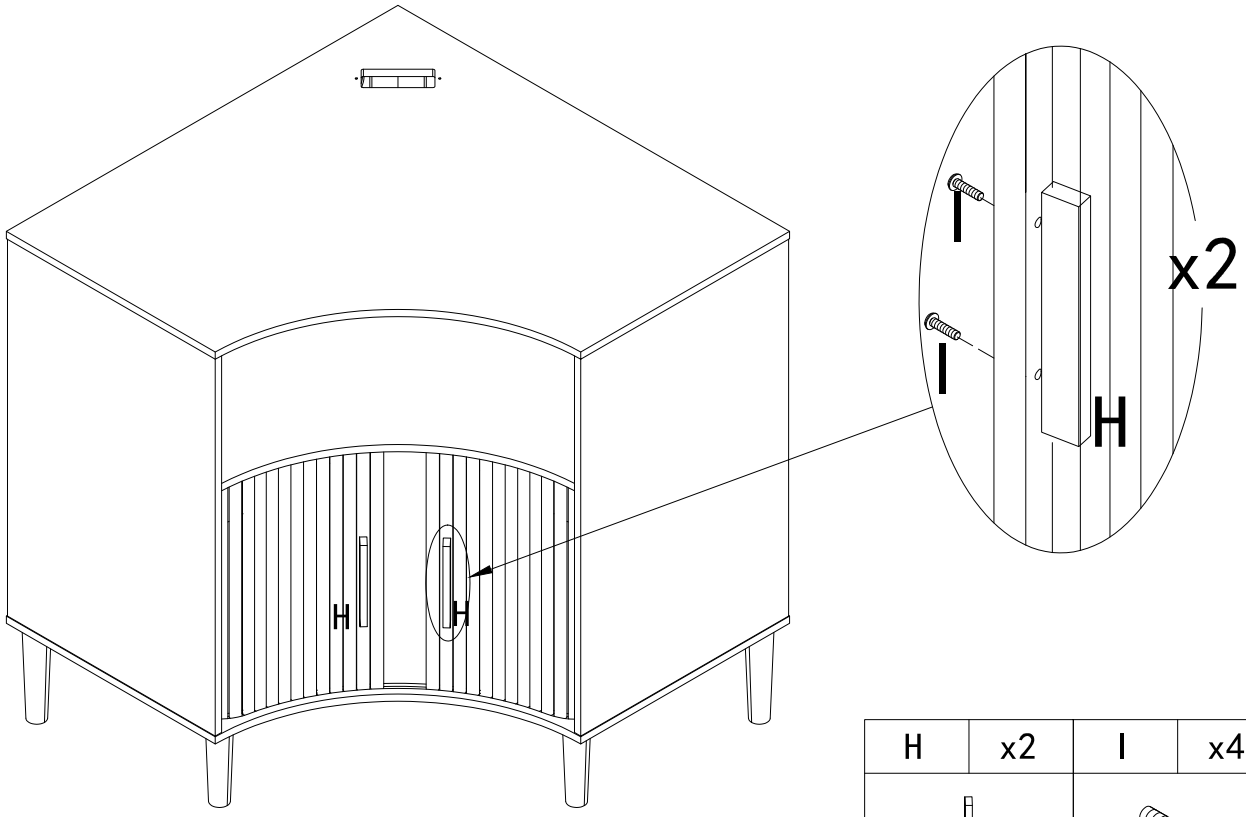

H	x2	I	x4
			M4*12mm

18.

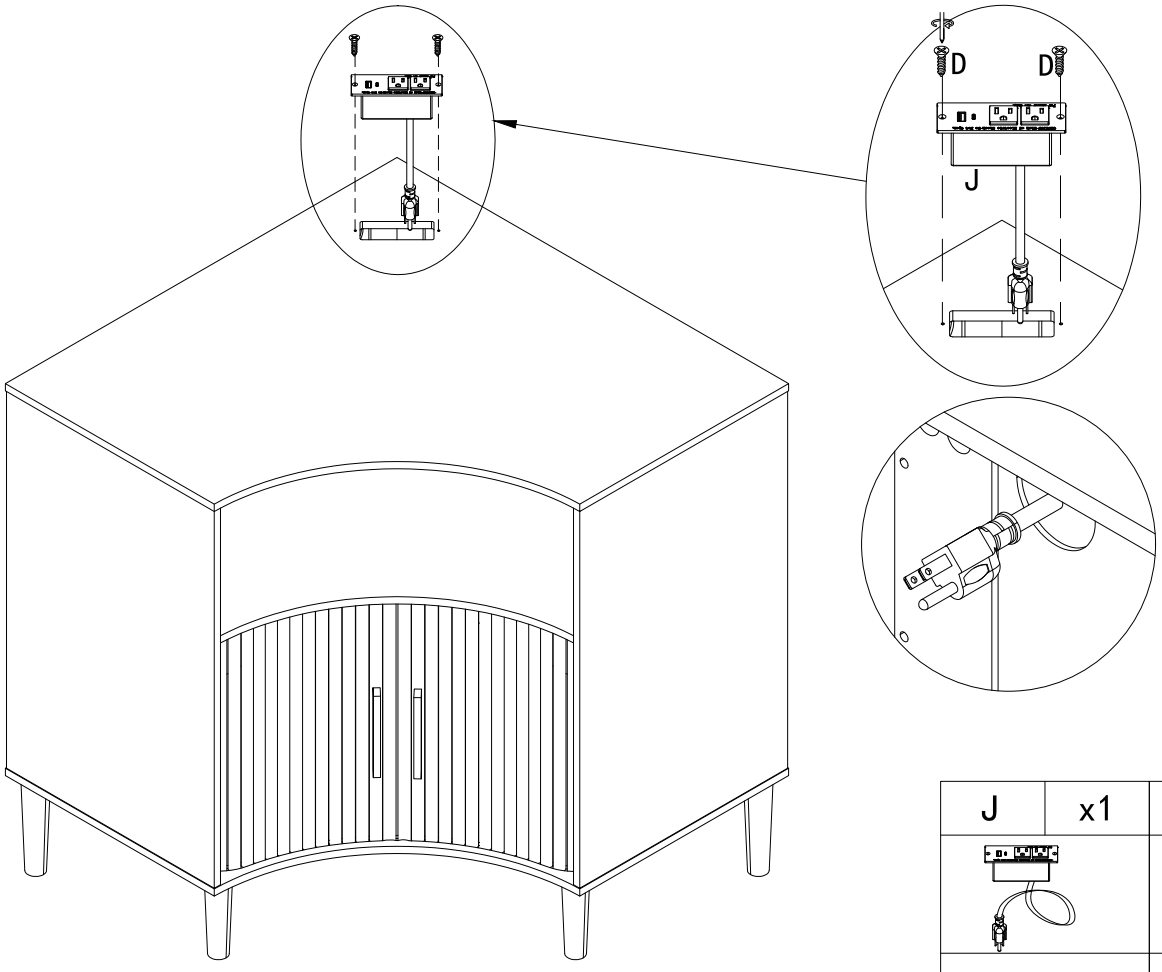

J	x1	D	x2
			∅3.5*12mm

19.

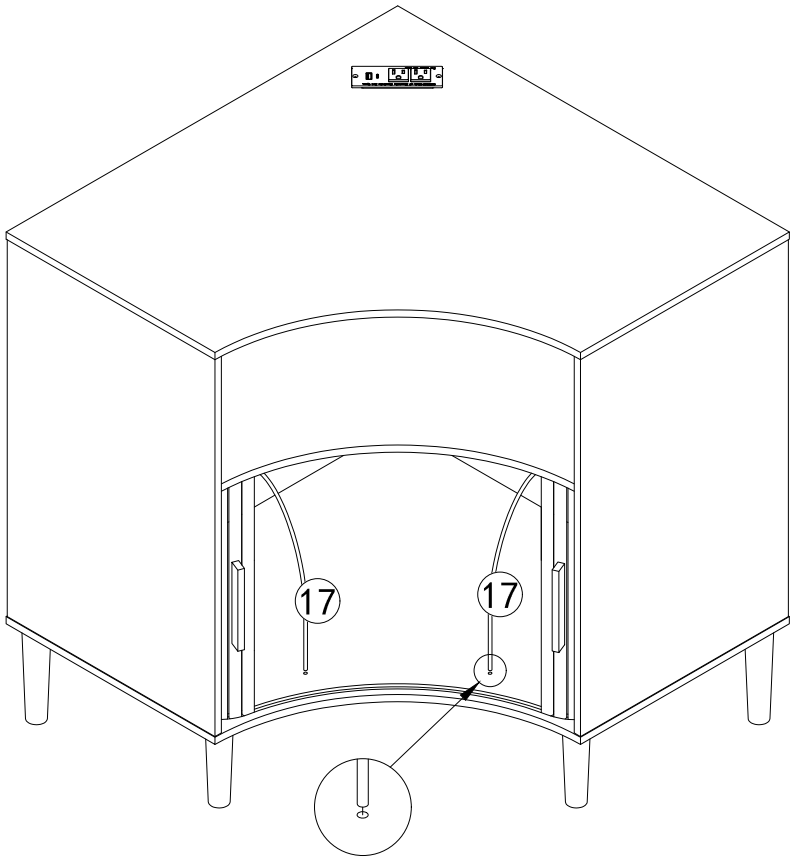

20.

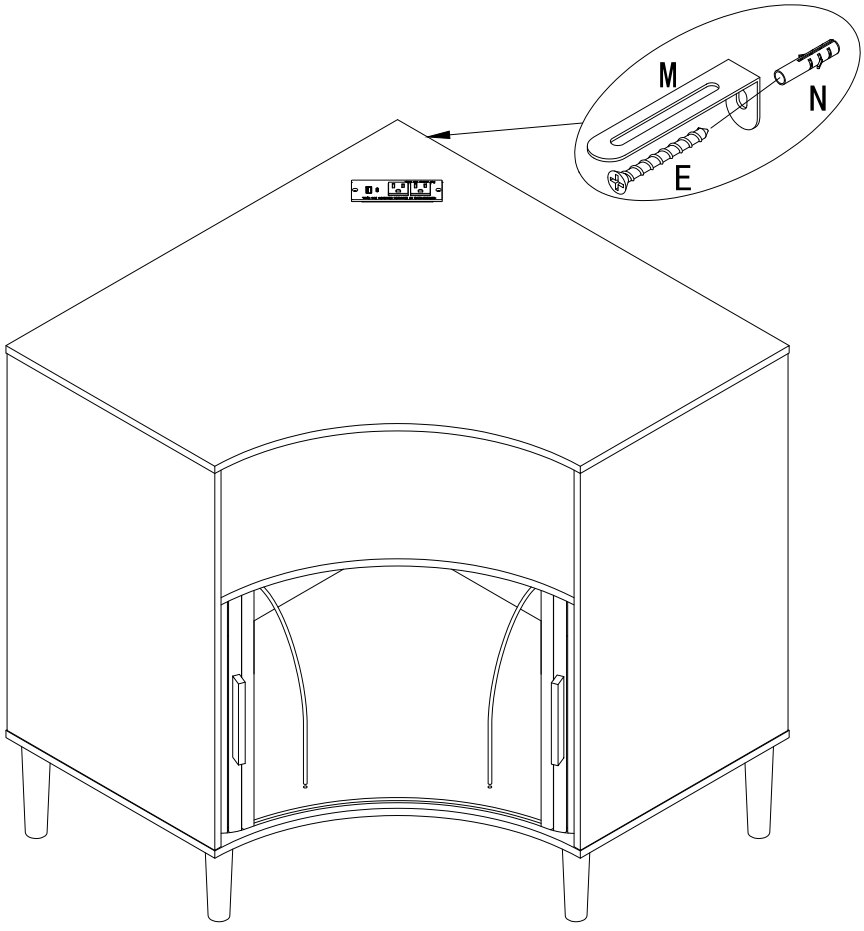

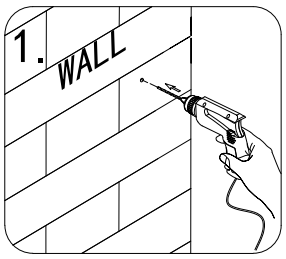

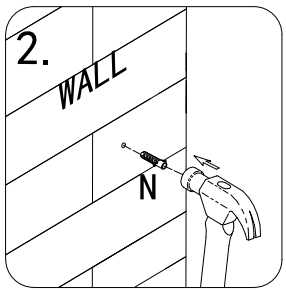

N	x1	E	x1
		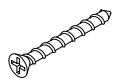	
		∅4*35mm	