# Pre-hung Door Installation Guide

## What's included

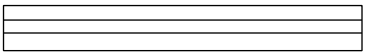

Ⓒ x1

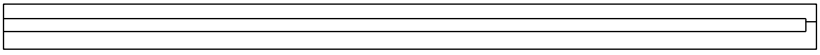

Ⓑ x1

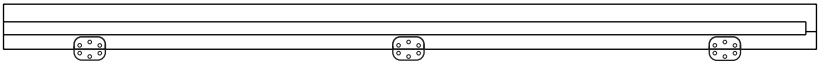

Ⓐ x1

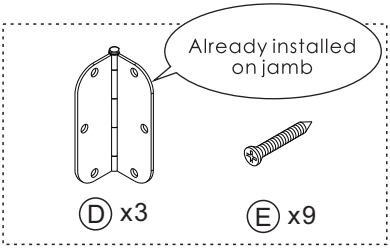


Ⓓ x3 Ⓔ x9

## Tools Required

| Speed Square | Phillips Screwdriver | Tape Measure | Pencil | Nail Gun |
|---|---|---|---|---|
|  |  | 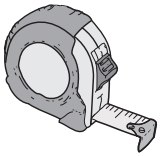 |  | 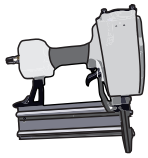 |

## Step ① Attach Door to Jamb

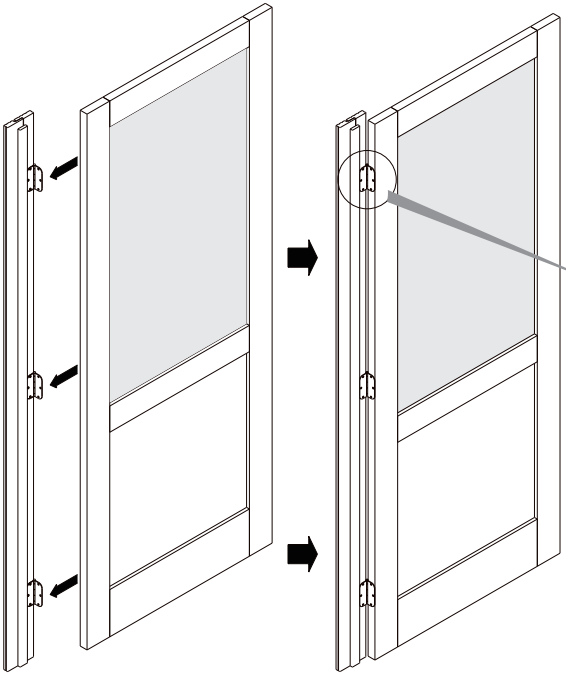

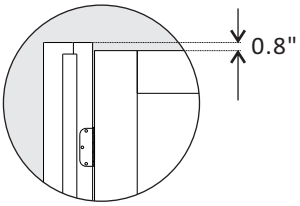


Pro tip: Leave a 0.8" space from the top of the jamb to the top of the door. This space is for the upper jamb.

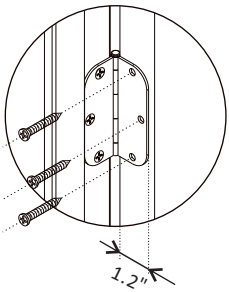


Pro tip: The edge of the hinge should be 1.2 inches from the edge of the door. This will leave enough room for the door to swing. There's no need to groove on the door as we have already taken into consideration the thickness of the hinge.

## Step ② De-attach Door and Jamb

Pro tip: A solid door is heavy, so we advise you to install the door jamb first and then attach the door for safety. It's easier to re-attach the door when half of the hinge has already been installed on the door.

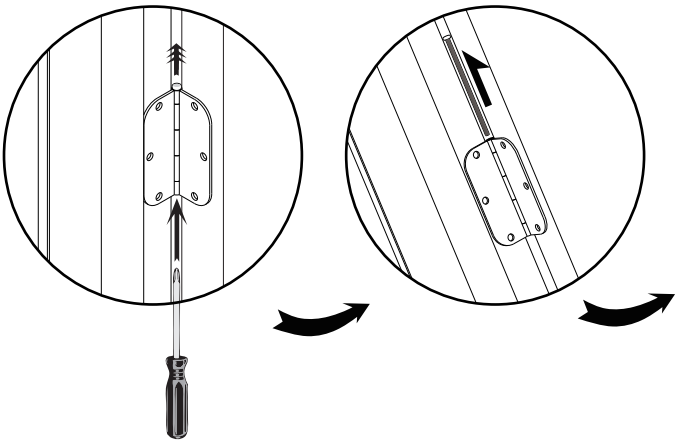

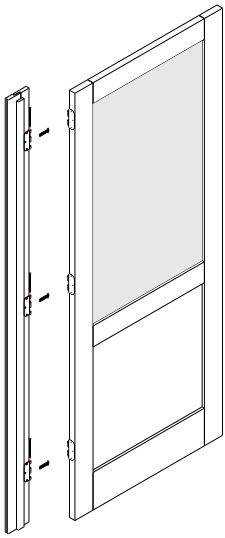

## Step ③ Assemble Jamb Kit

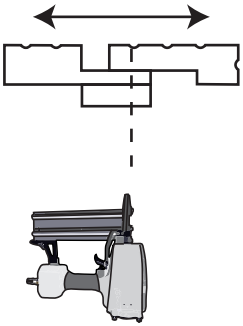

Our door frame is adjustable in width to fit different wall thicknesses. Please adjust the frame to the desired width and secure it with a nail gun. Replicate this step for all 3 frames

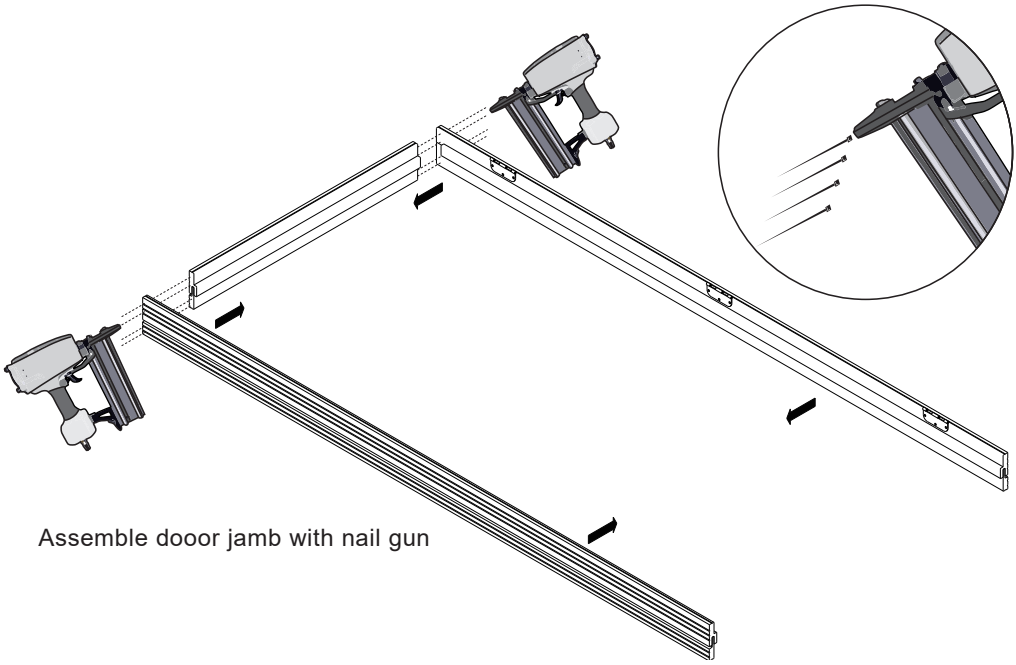

Assemble dooor jamb with nail gun

## Step ④ Install Jamb to the Opening, and Re-attach the Door

