ASSEMBLY INSTRUCTIONS

Scan the QR Code for faster installation

CX-80-8COL

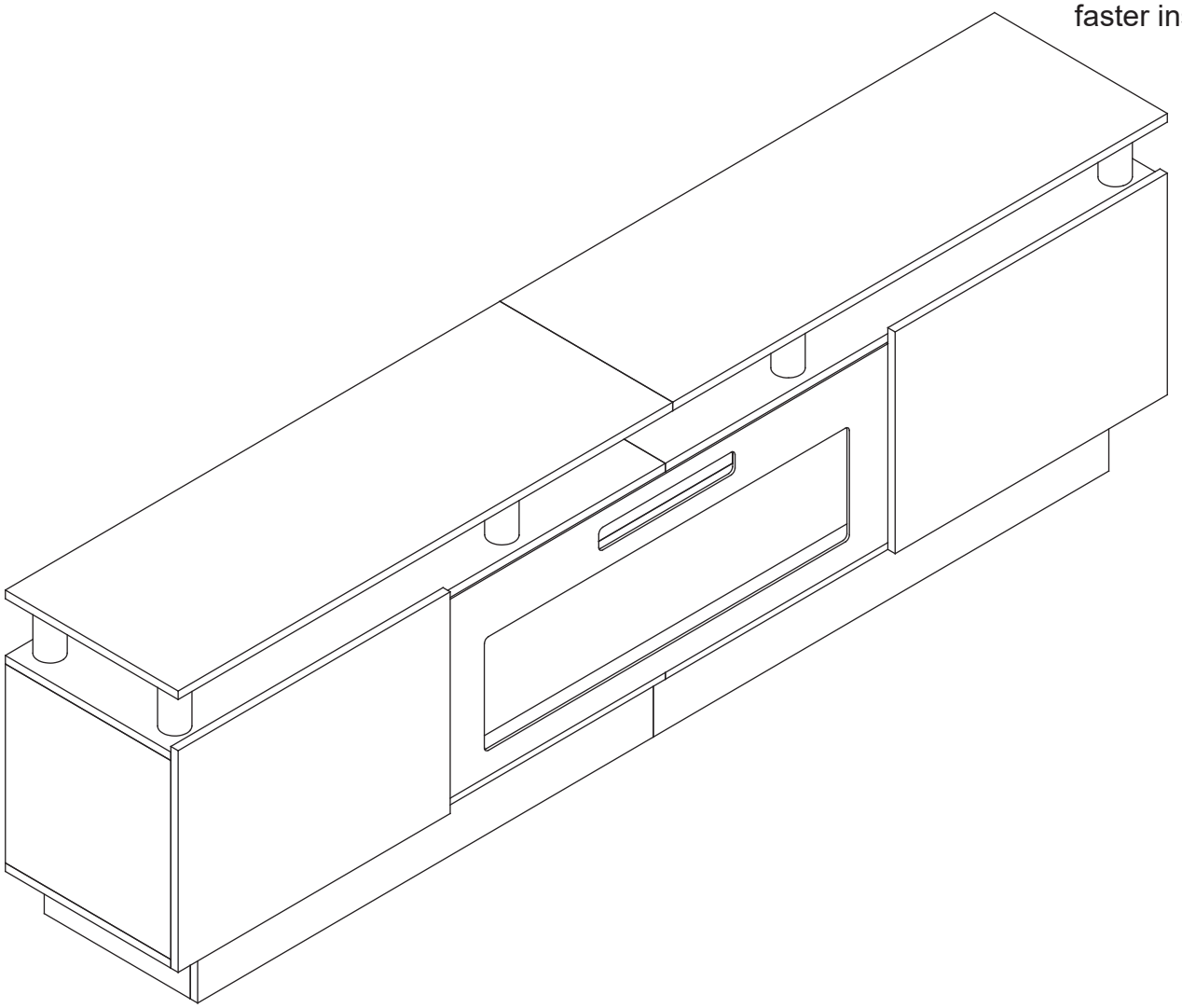

Attention: The Fireplace and TV stand come in **TWO PACKAGES**
Please don't be confused if only one package was received.

The light strip comes with fireplace. It should be installed after **TWO PACKAGES** received.

hellovitesse@gmail.com

+1(503) 928-7812

Parts list

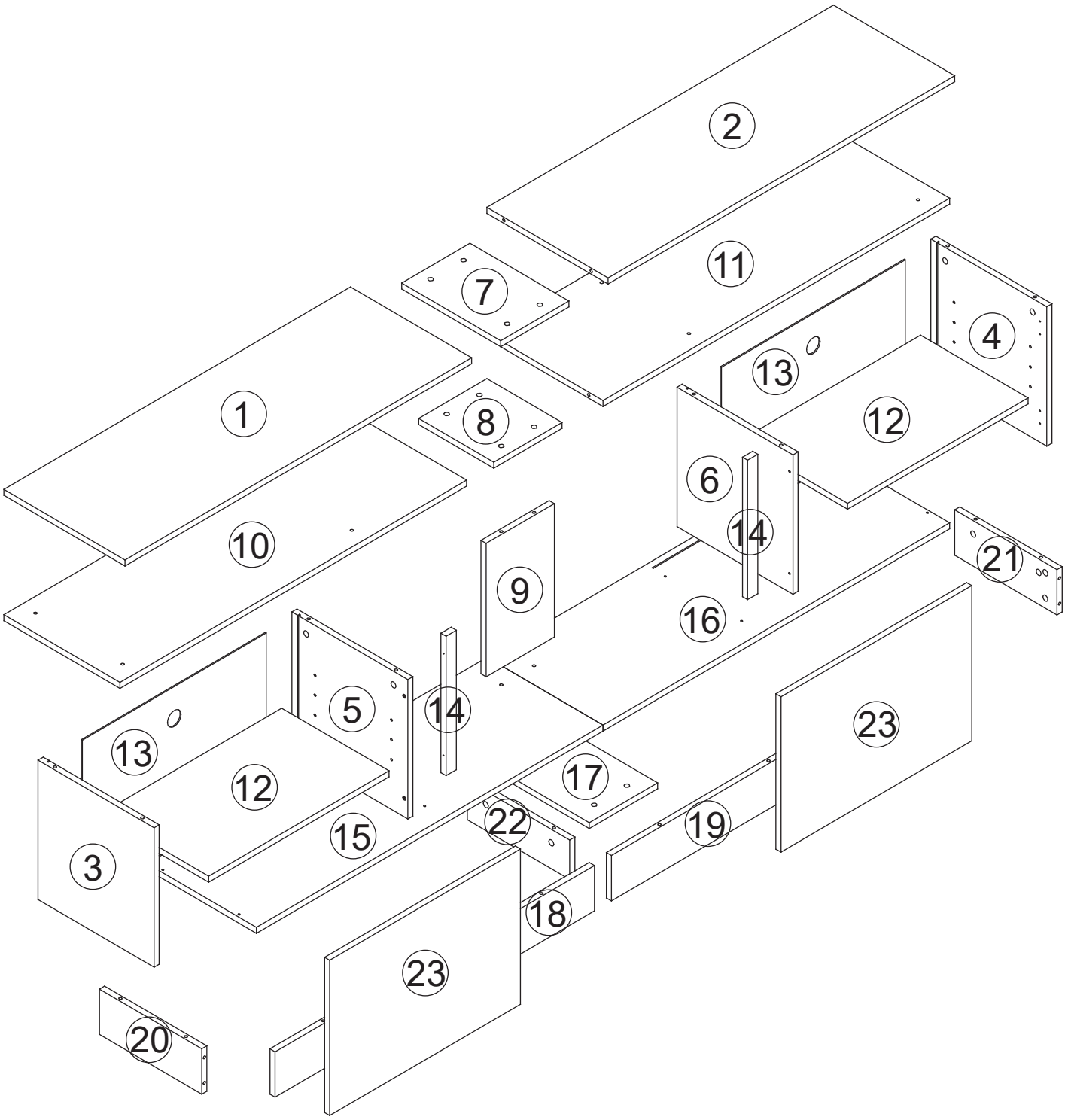
1
2
3
4
5
6
7
8
9
10
11
12
13
14
15
16
17
18
19
20
21
22
23

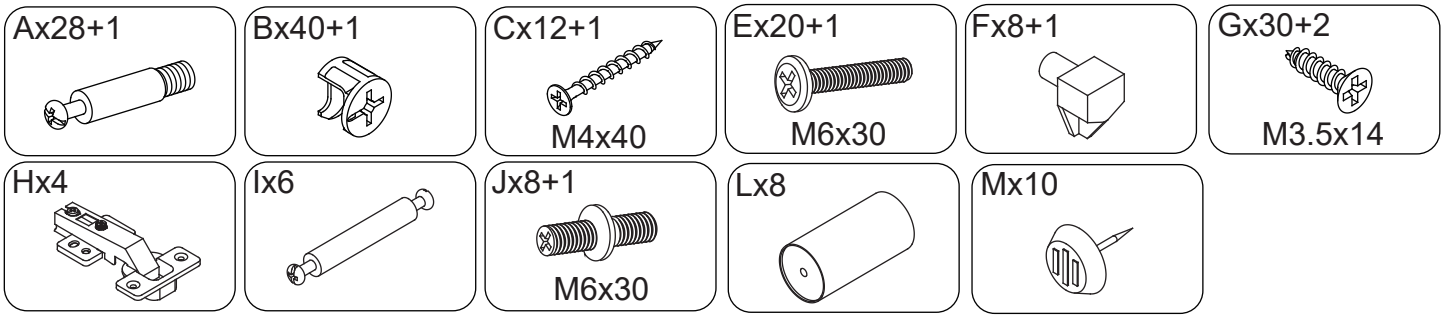
Ax28+1
Bx40+1
Cx12+1
M4x40
Ex20+1
M6x30
Fx8+1
Gx30+2
M3.5x14
Hx4
Ix6
Jx8+1
M6x30
Lx8
Mx10

Installation steps

STEP 1

Check the hole locations on Plate 20 and Plate 21 to identify the correct installation direction.

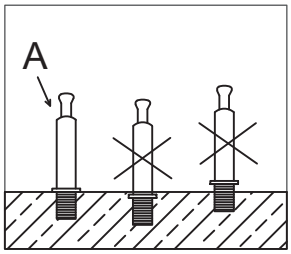

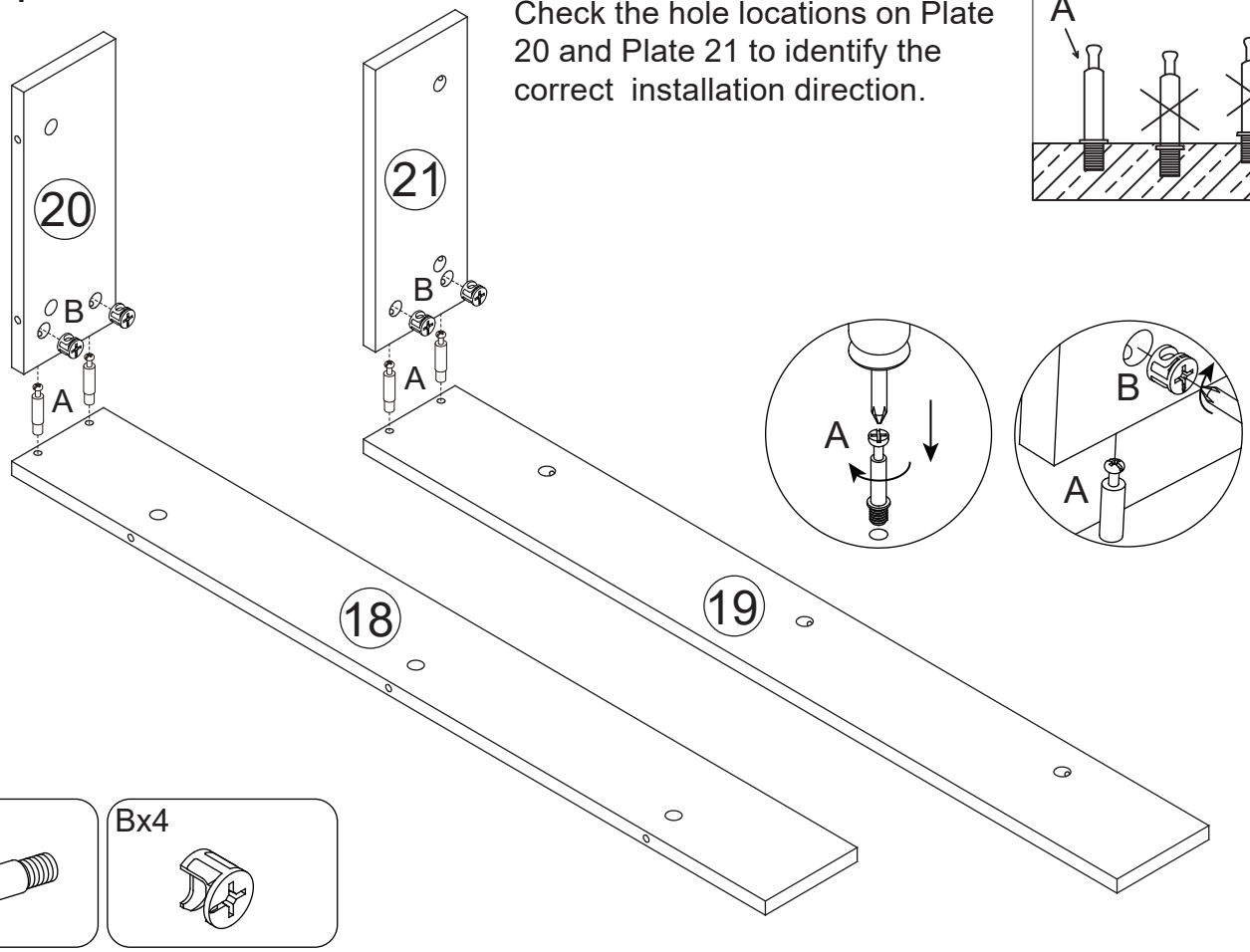

STEP 2

Please make sure tighten the B part.

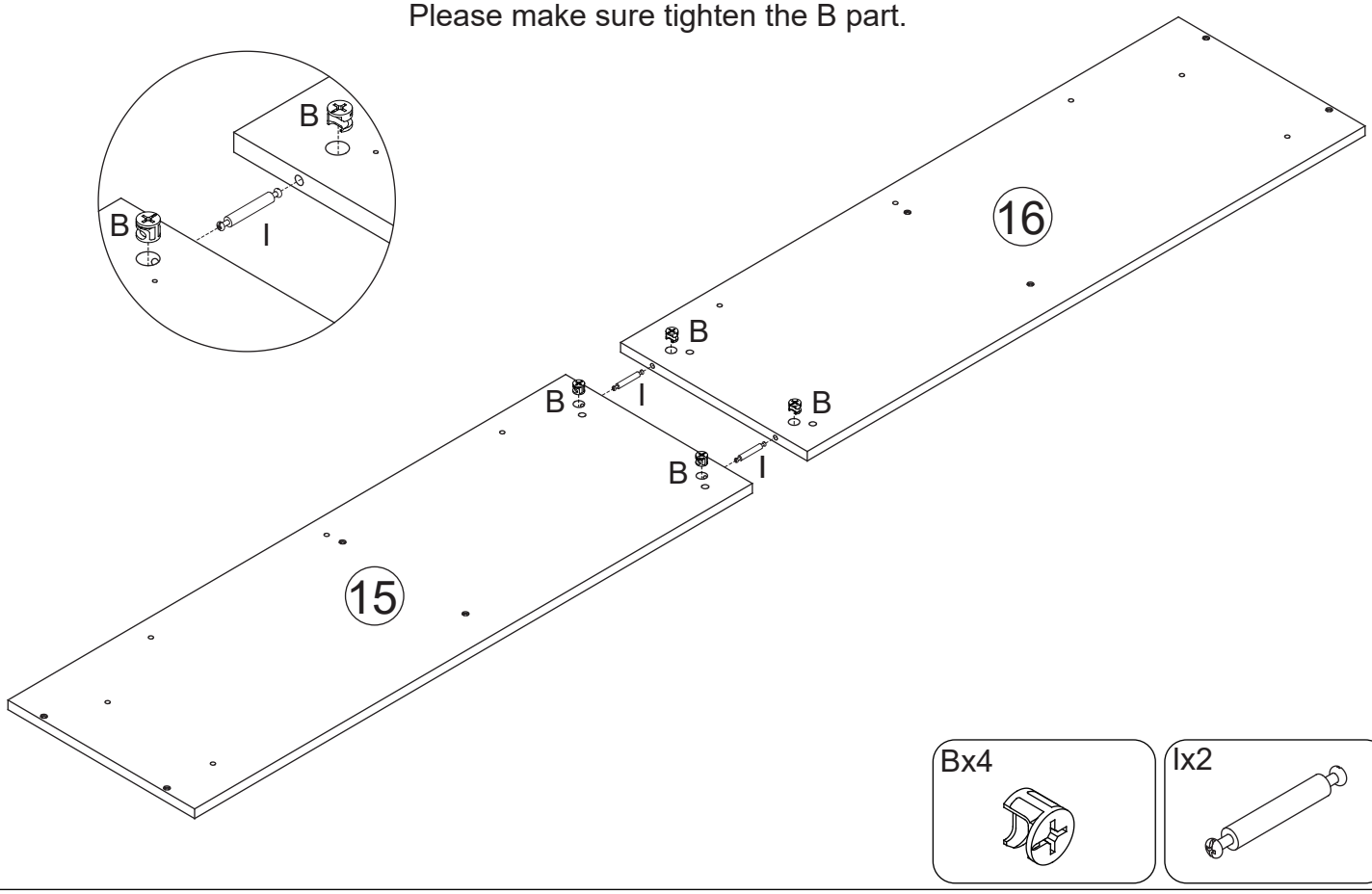

STEP 3

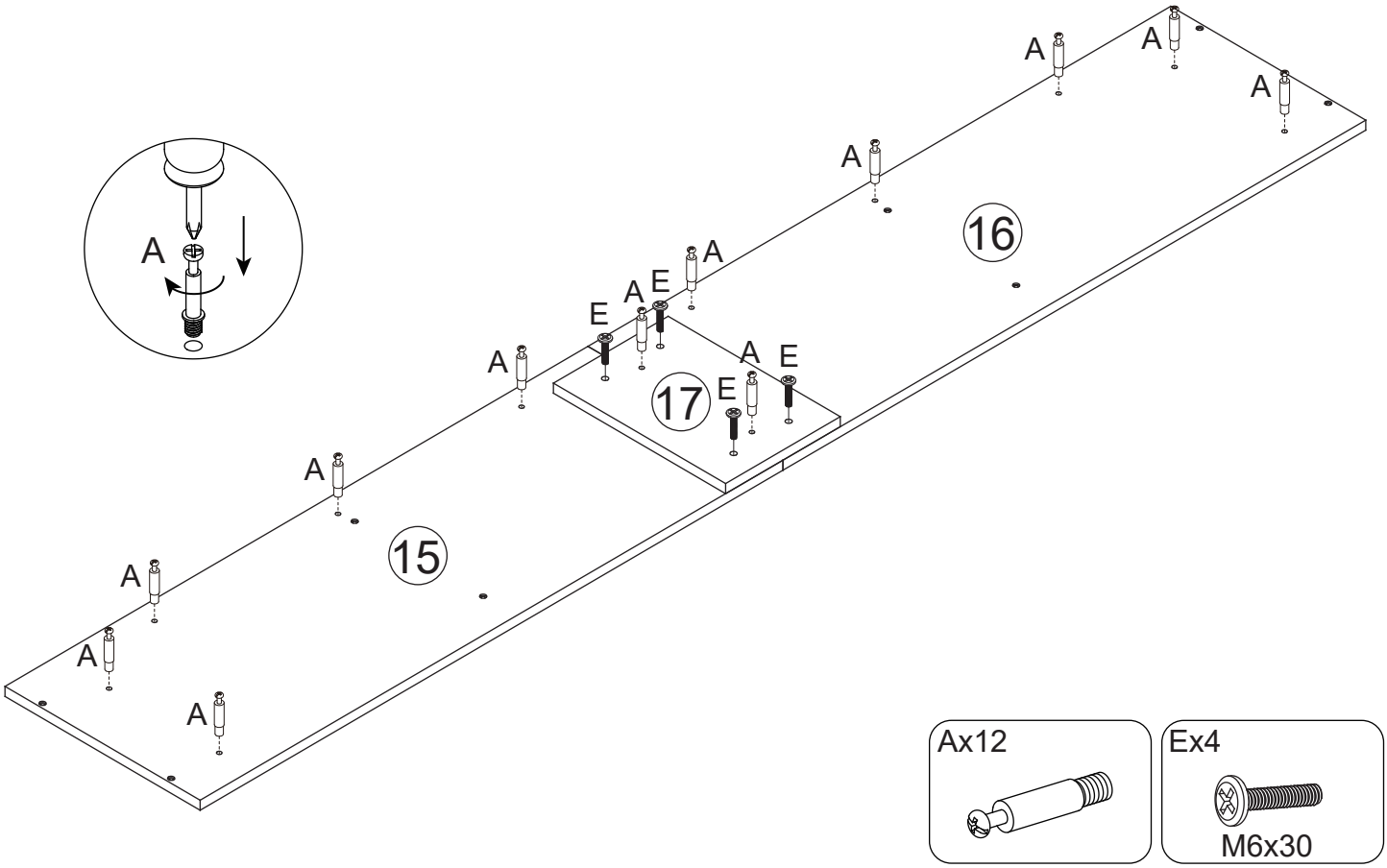

STEP 4

Install the pre-assembled parts from Step 1 onto Plate 15 and Plate 16, then attach Plate 22. Finally, gently tap according to the diagram to install the anti-slip washer M.

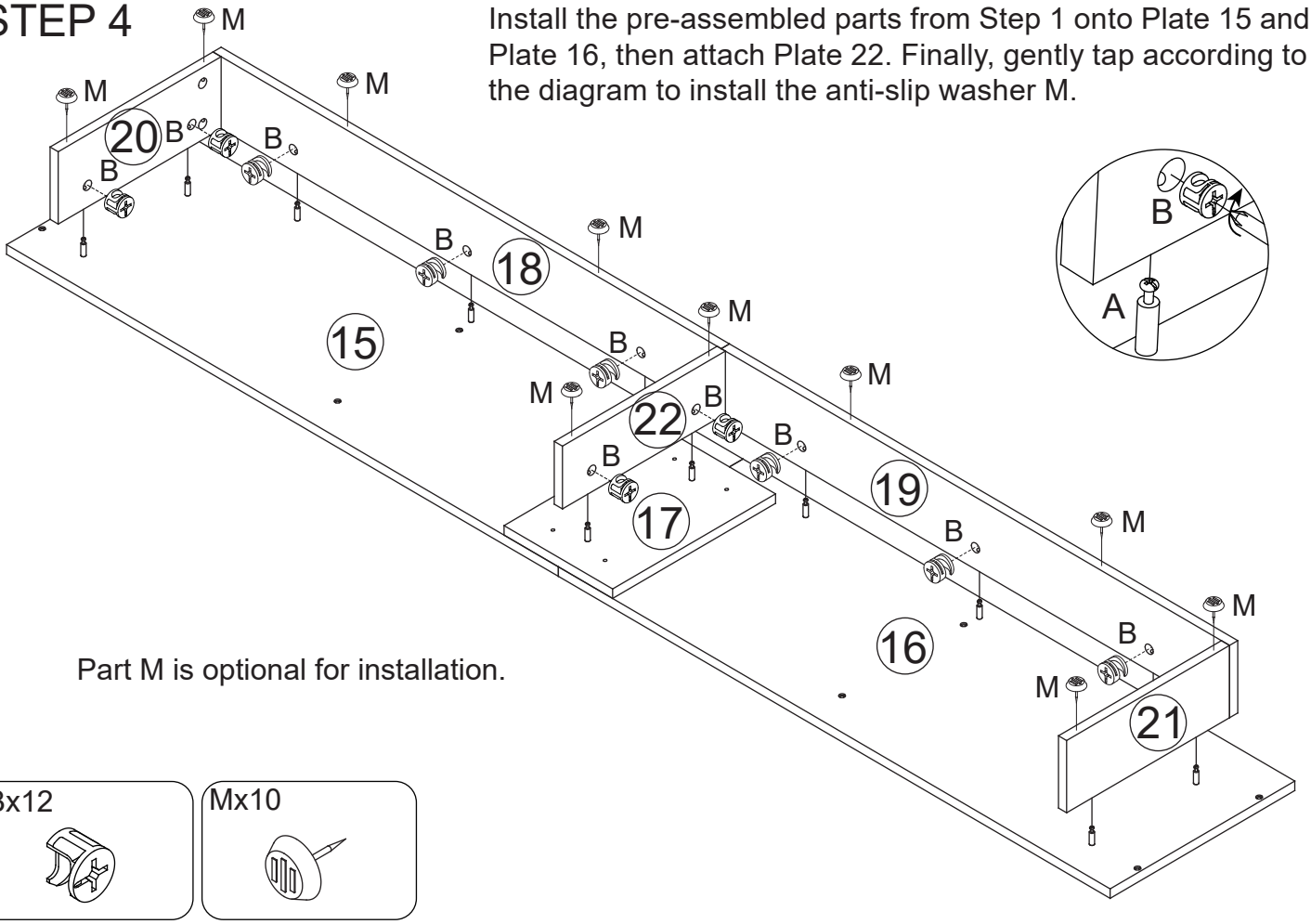

Part M is optional for installation.

STEP 5

When installing Plates 4 and 6, refer to the diagrams in the instructions to ensure proper alignment. The same goes for Plates No. 5 and No. 6.

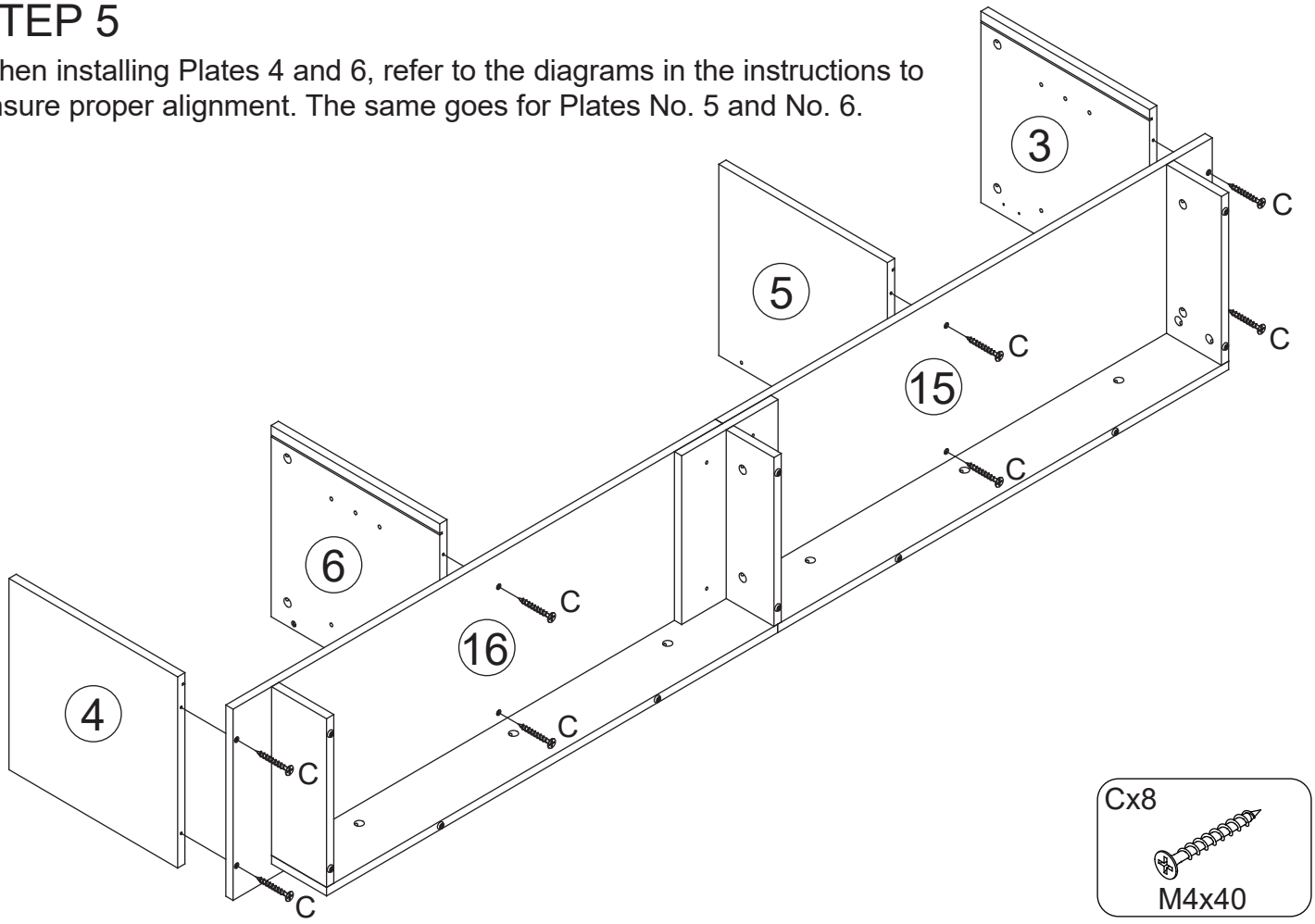

STEP 6

First mount plate 9, then slide plate 13 into the slot following the grooves totally.

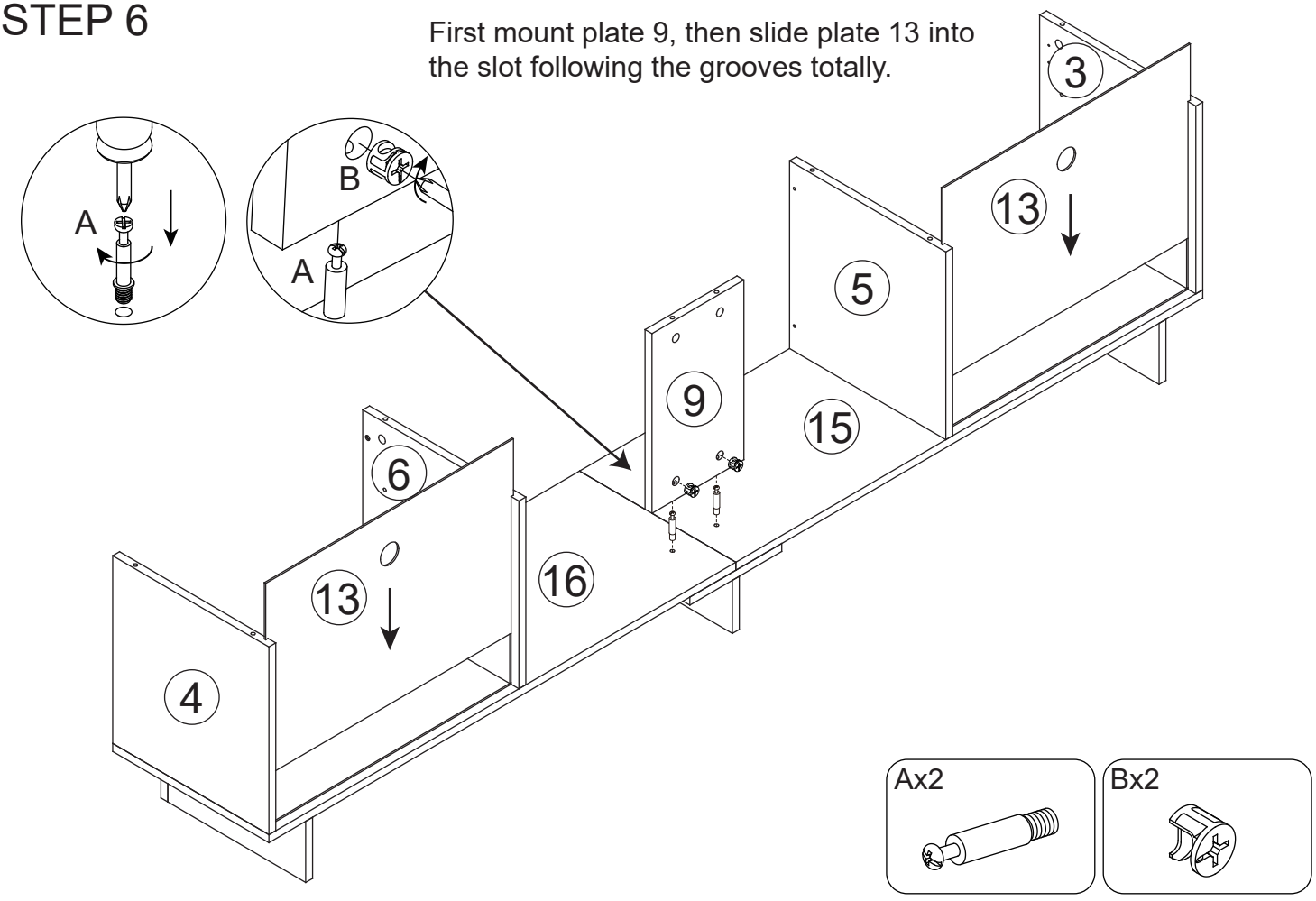

STEP 7

First, install each part C into the screw holes one by one, but do not tighten them immediately. Wait until all screws are in place before tightening them.

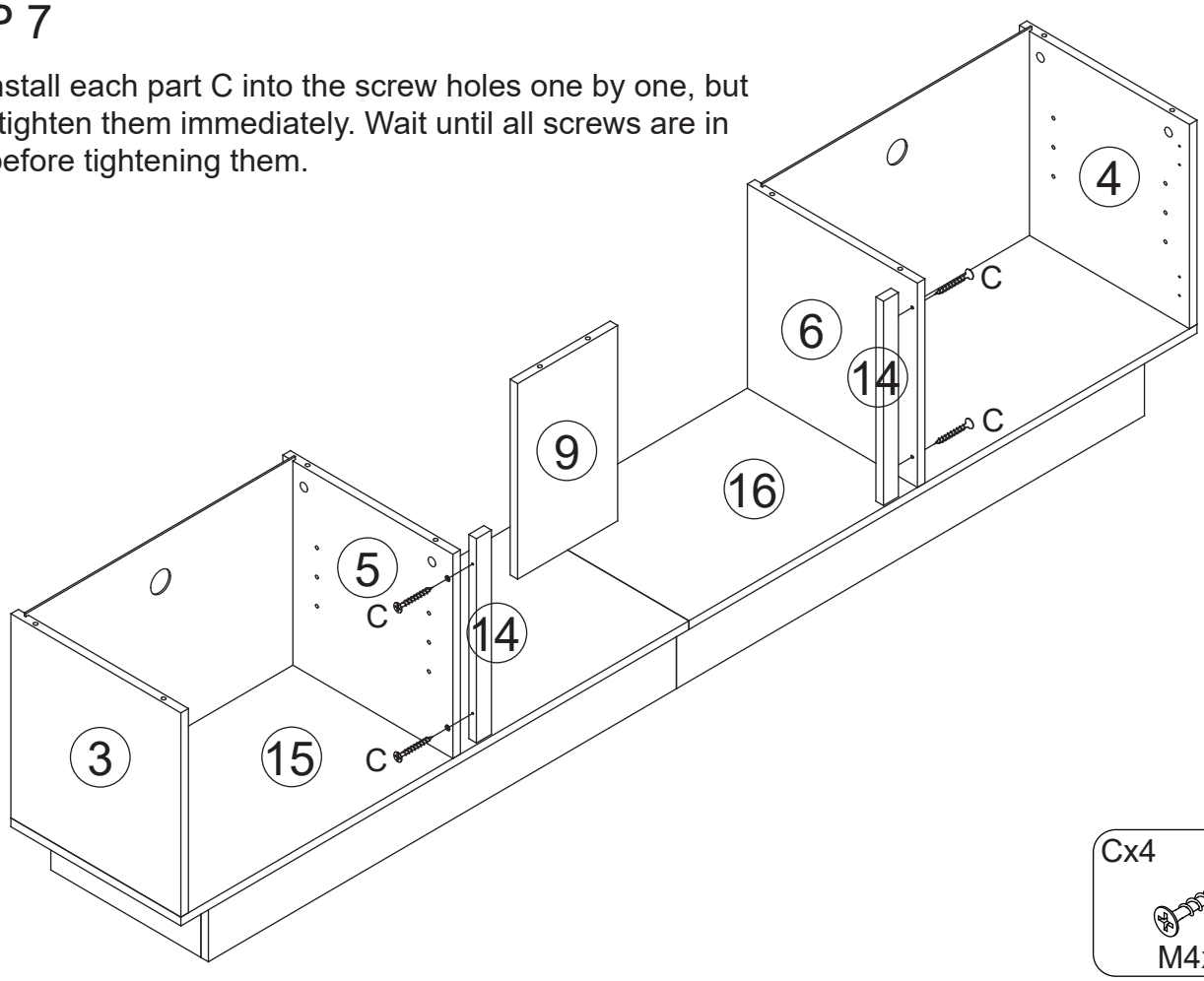

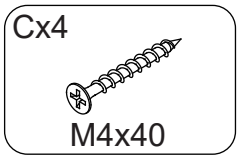

STEP 8

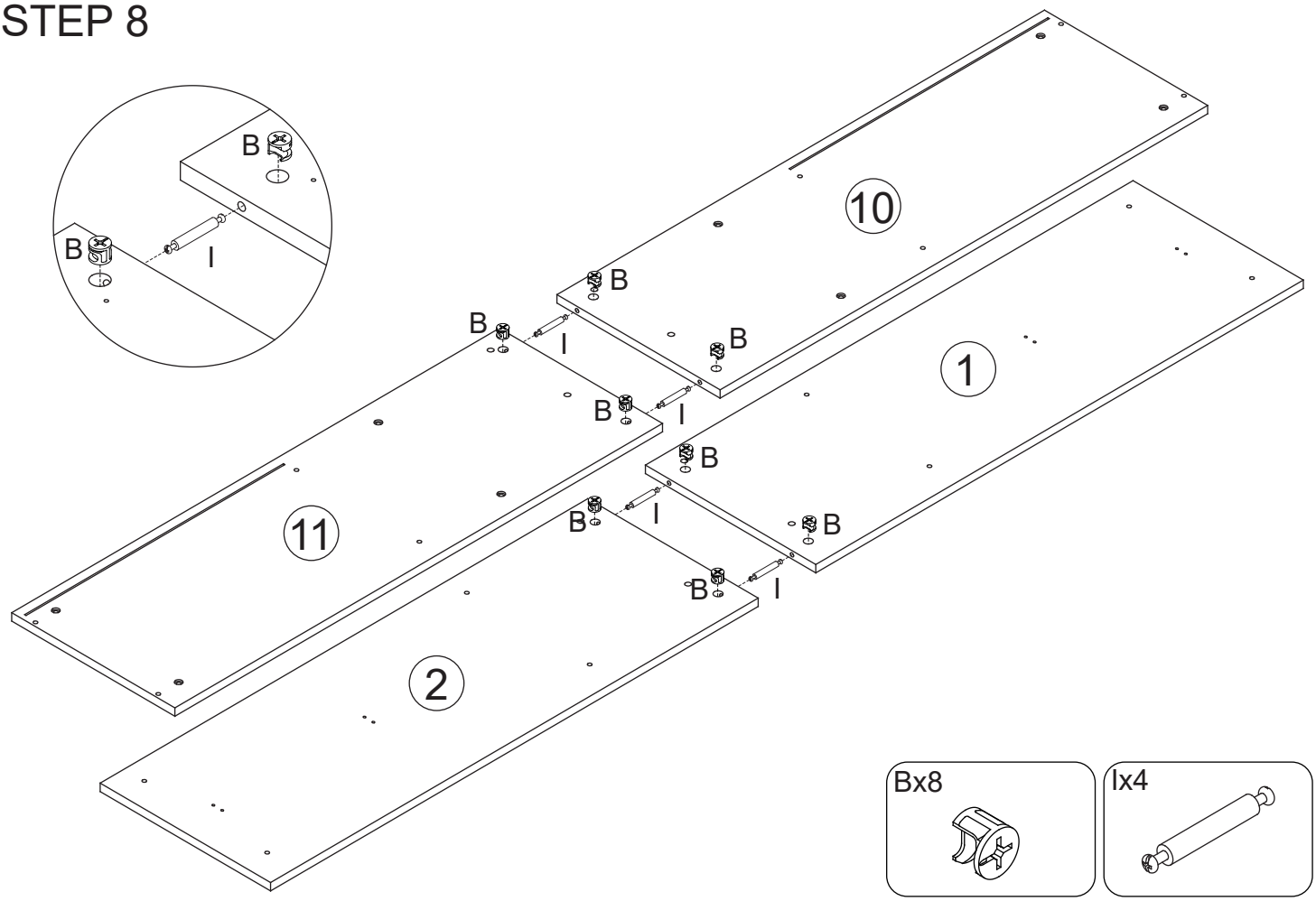

STEP 9

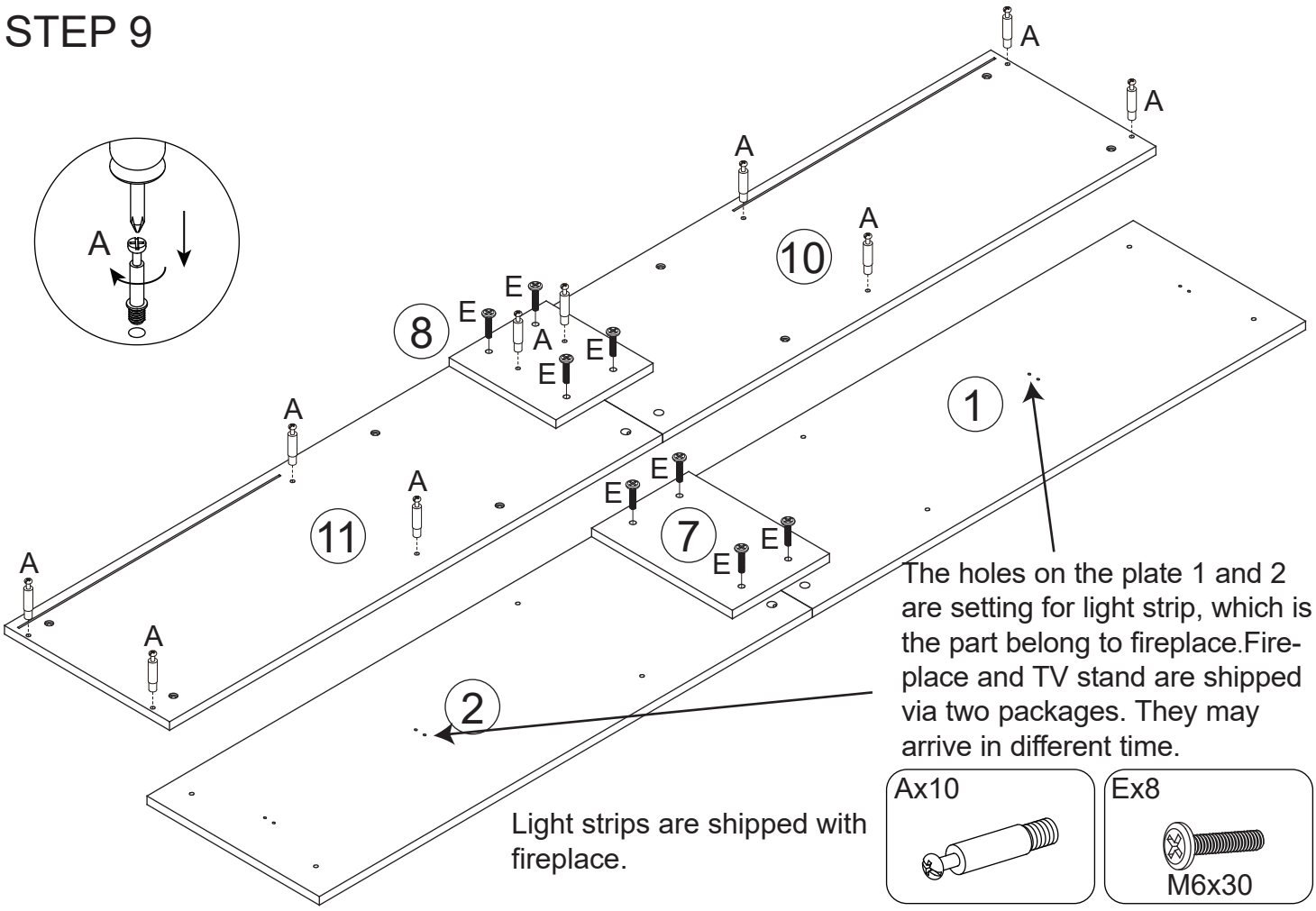

The holes on the plate 1 and 2 are setting for light strip, which is the part belong to fireplace.Fireplace and TV stand are shipped via two packages. They may arrive in different time.

Light strips are shipped with fireplace.

STEP 10

The rotating accessory L is connected to J. During the rotation process, avoid over-tightening—stop as soon as you feel slight resistance.

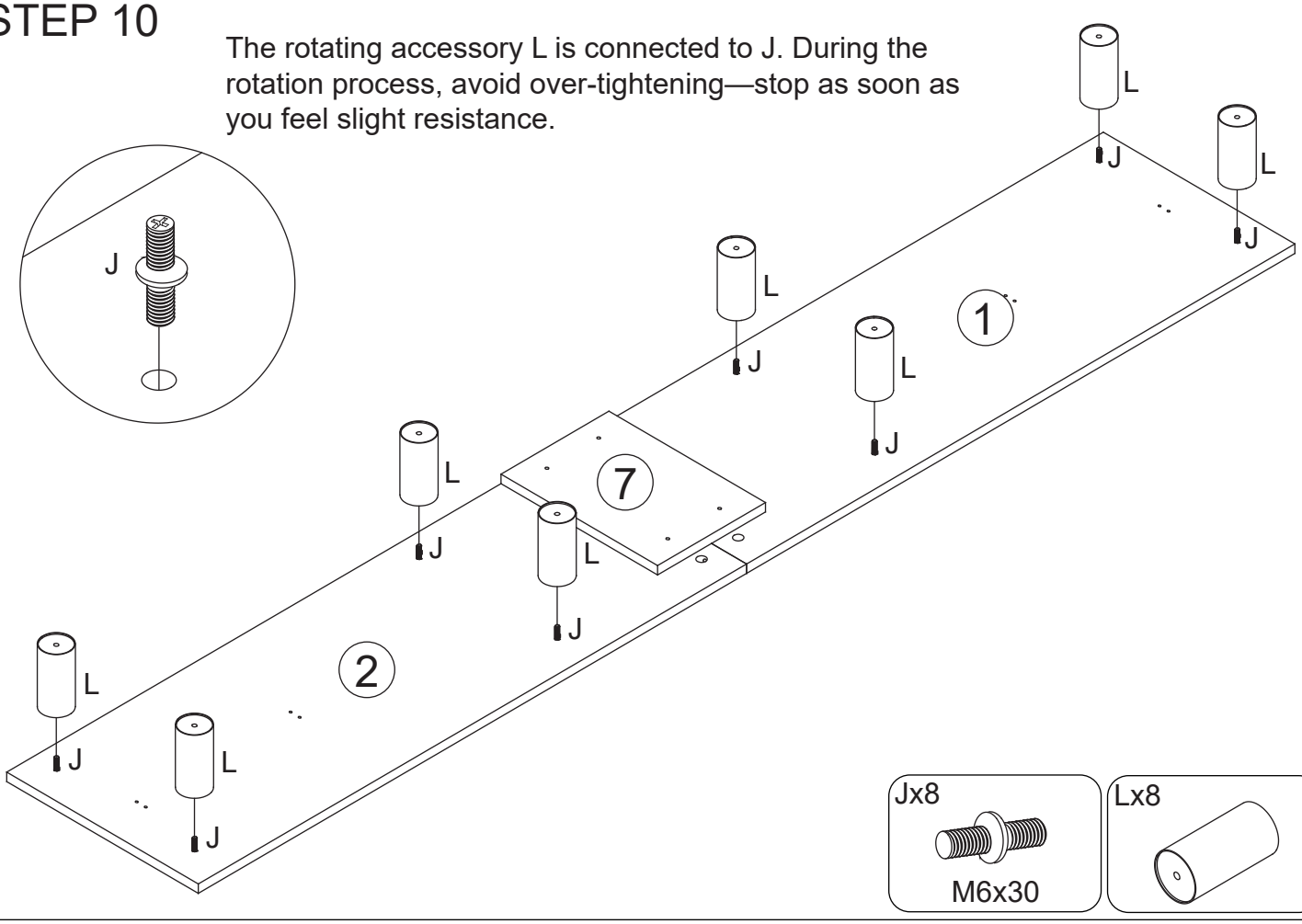

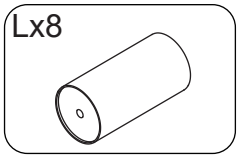

STEP 11

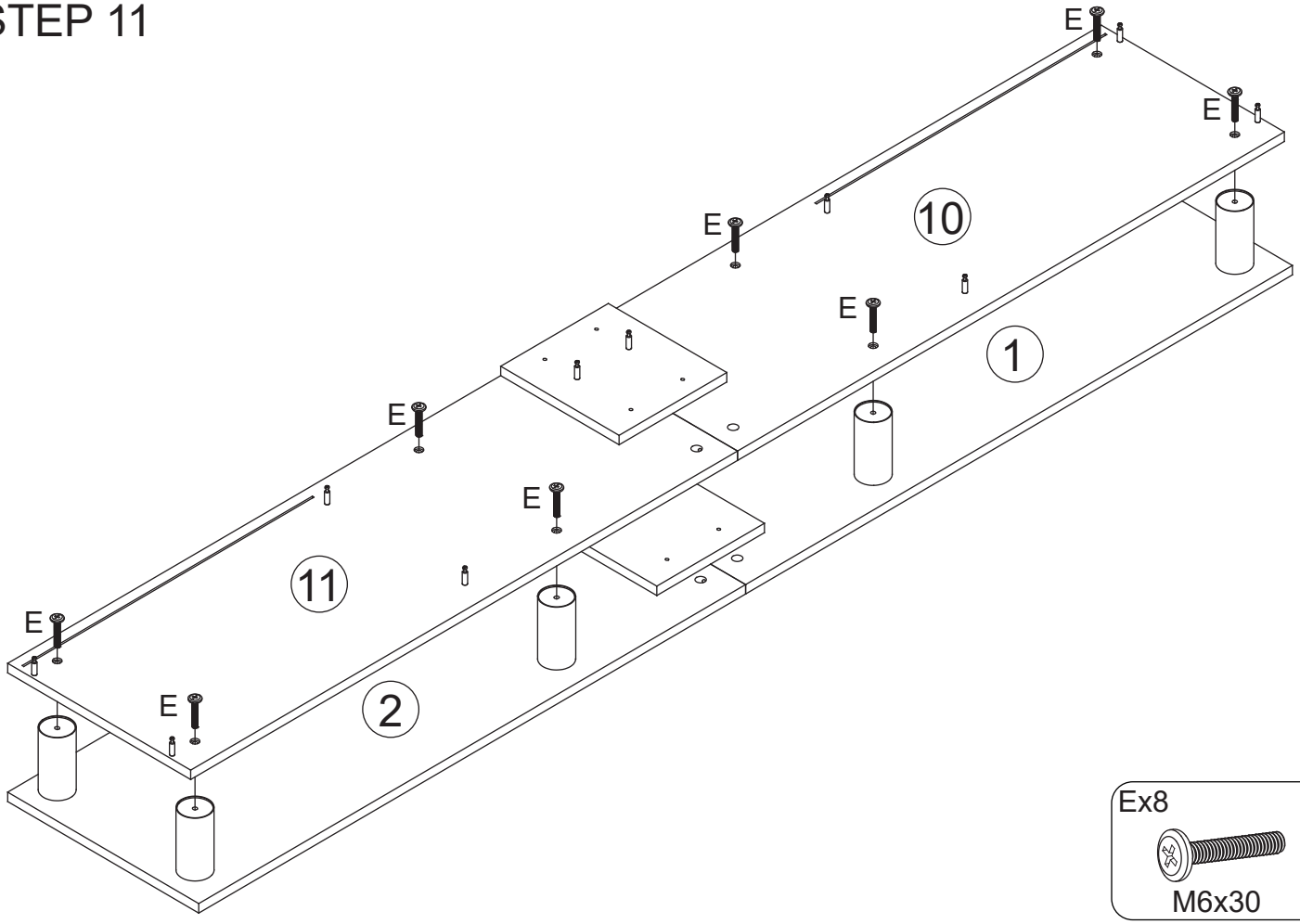

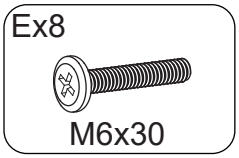

STEP 12

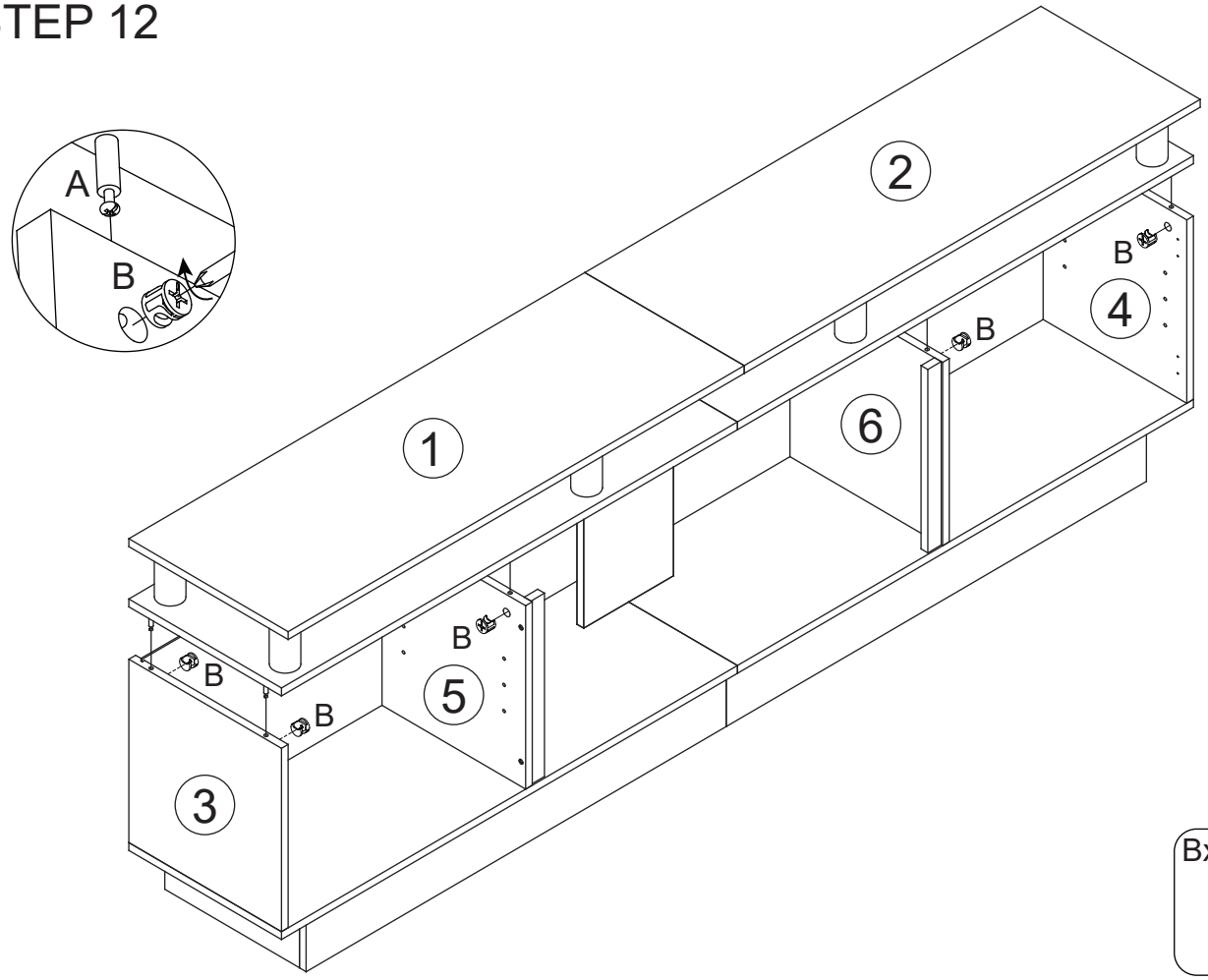

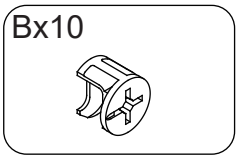

STEP 13

For the detail installation steps of fireplace.Please check the manual of the fireplace.

The fireplace glass need to be removed, then install the main body of fireplace. Drilling the screws to align fireplace with TV stand directly (pre-drill holes do not provide in order to prevent the damage during shipping.)

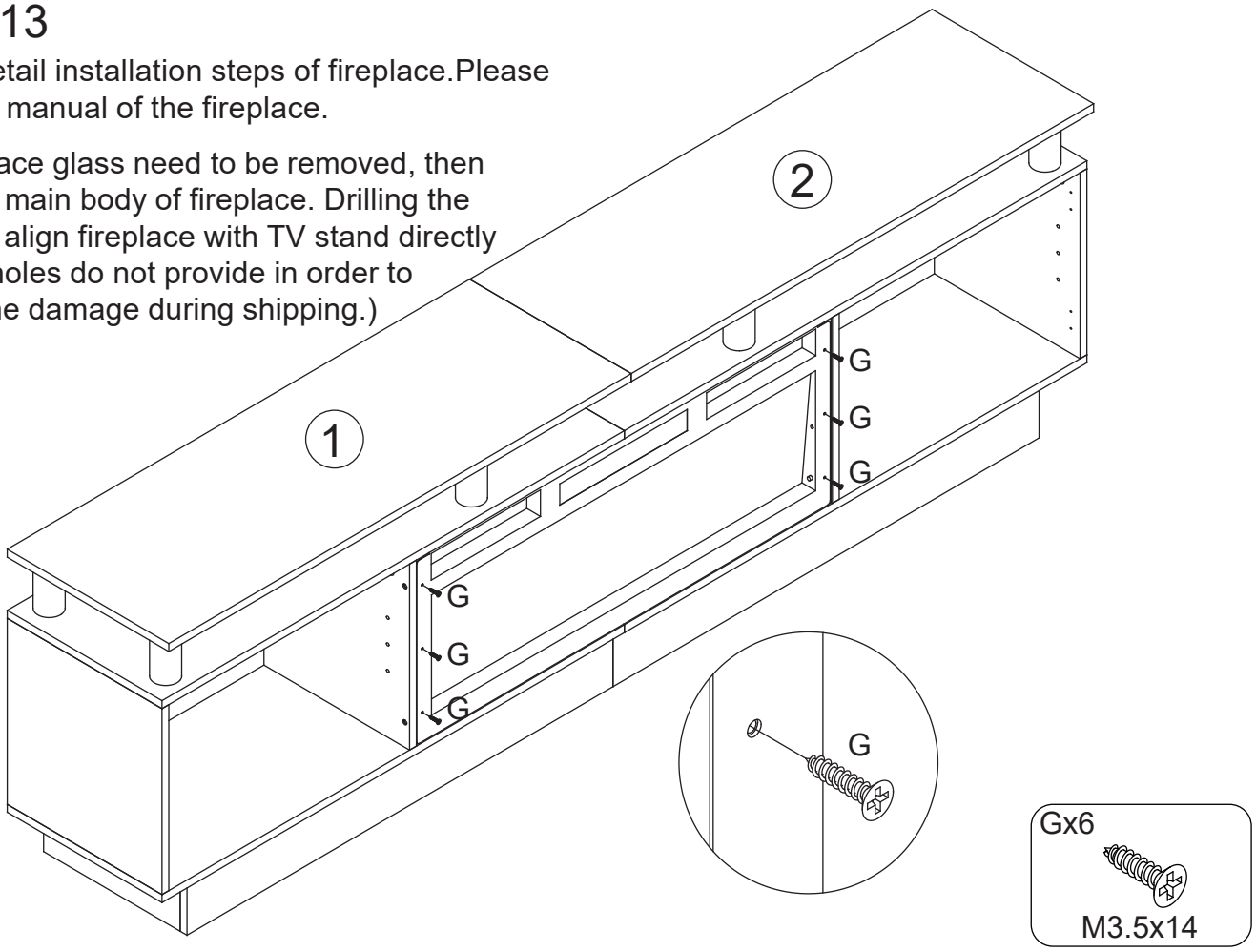

STEP 14

Finally install the glass back to fireplace.

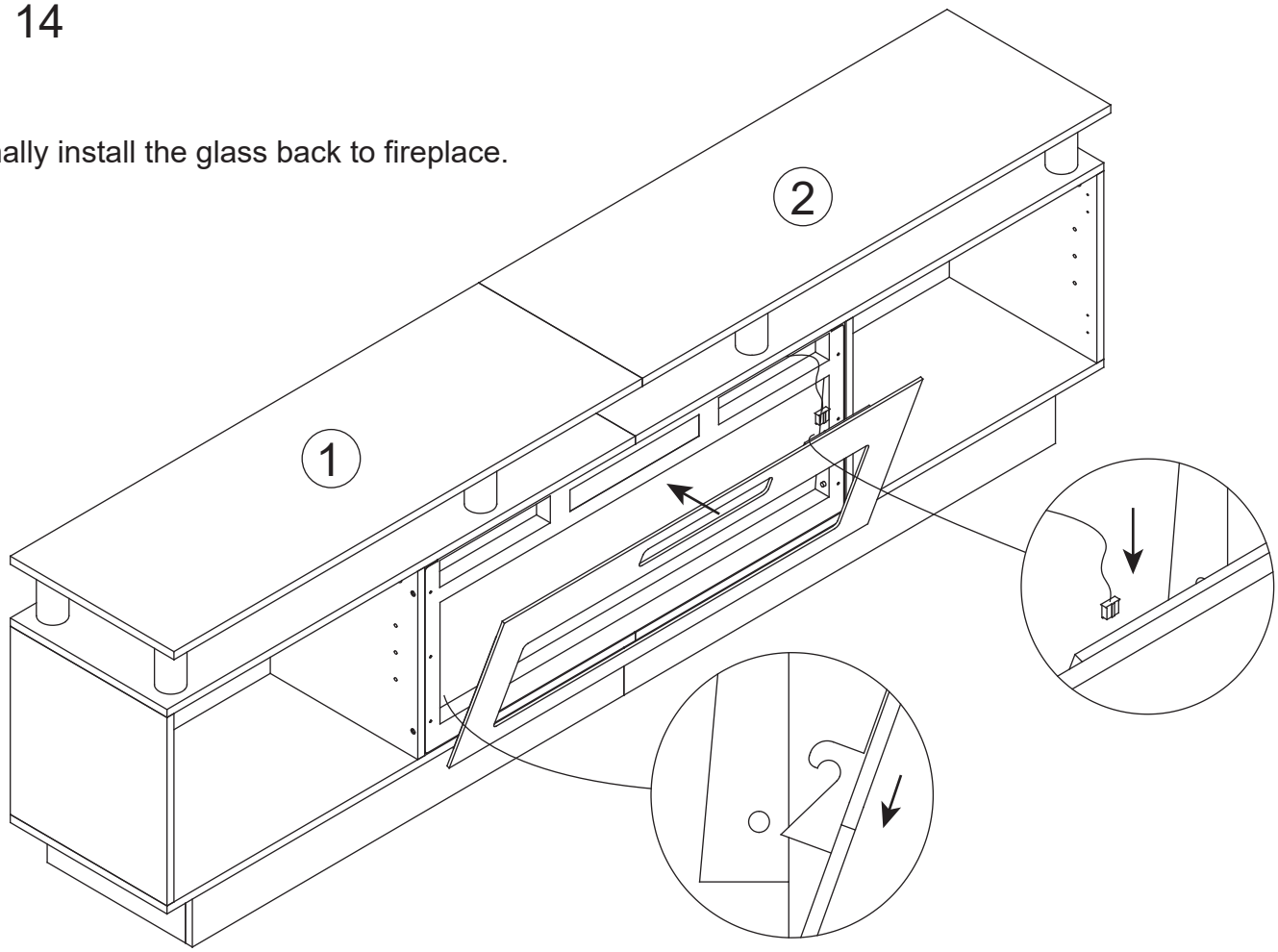

STEP 15

Insert the 4 part F into the holes,
than slide plate 12 into position.

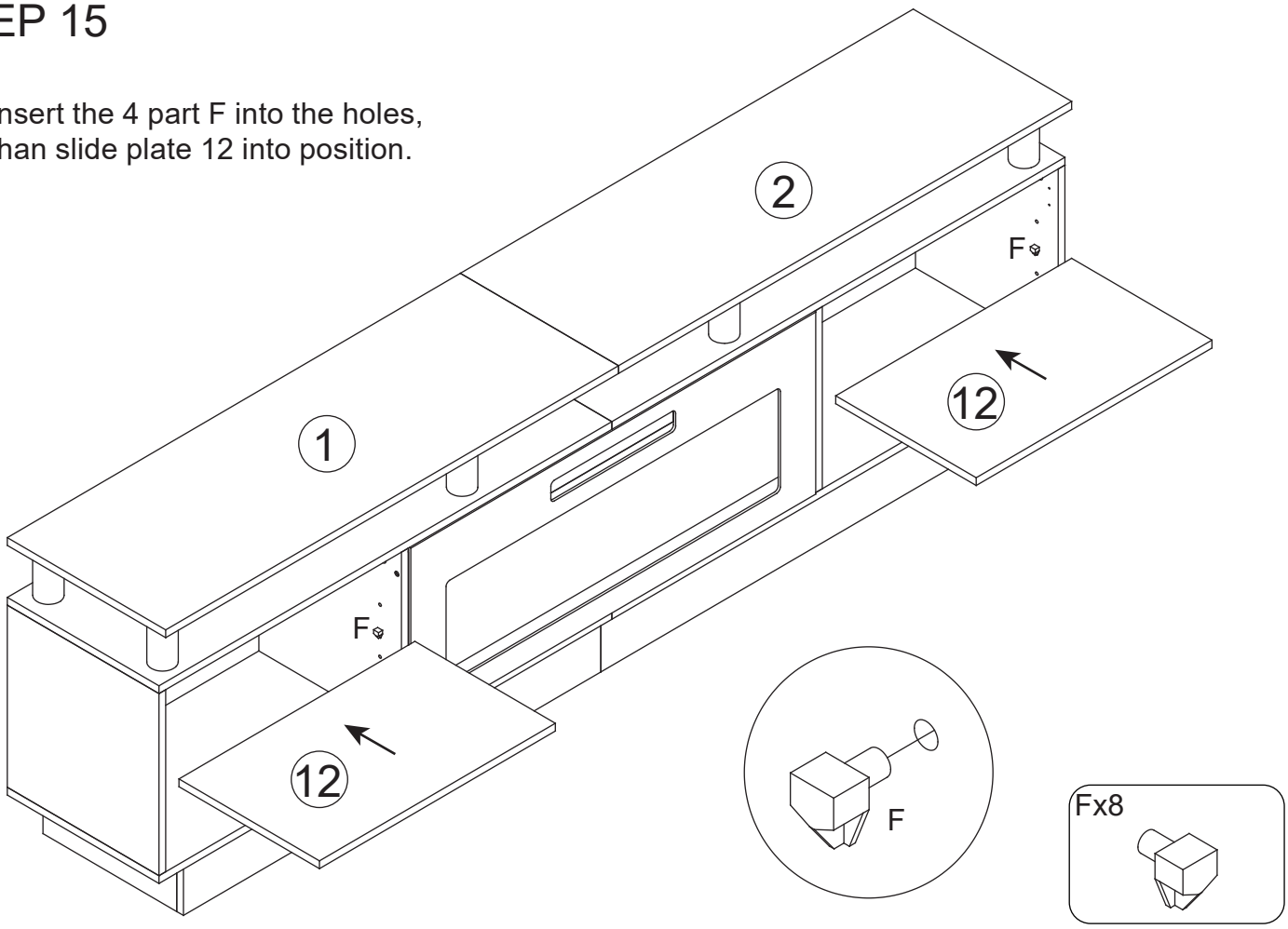

STEP 16

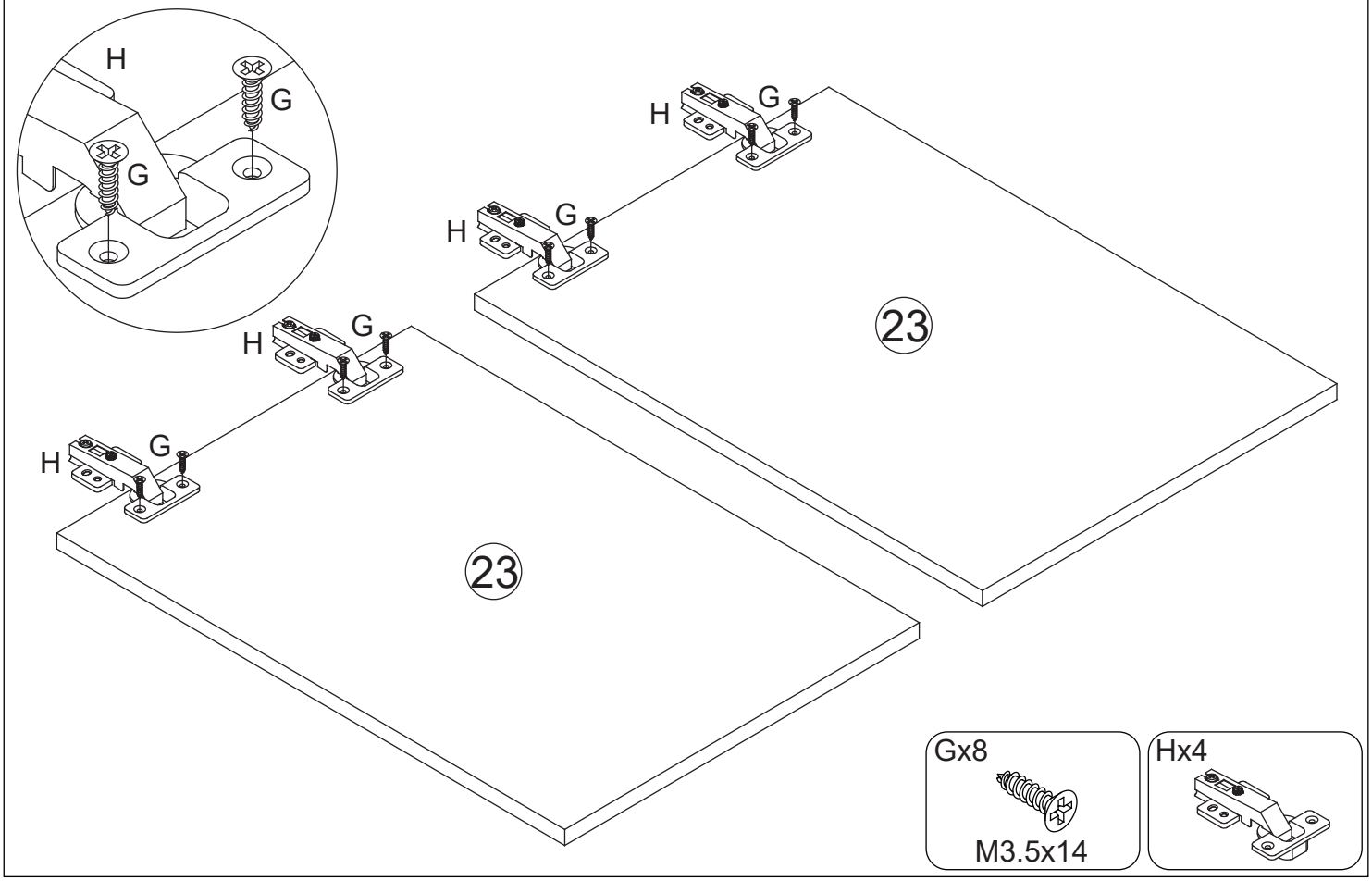

STEP 17

Adjust the screws at different positions to control the door's height, extension, and tightness (see diagram).If the door won't close, try screw adjustments first. If unresolved, contact customer support.

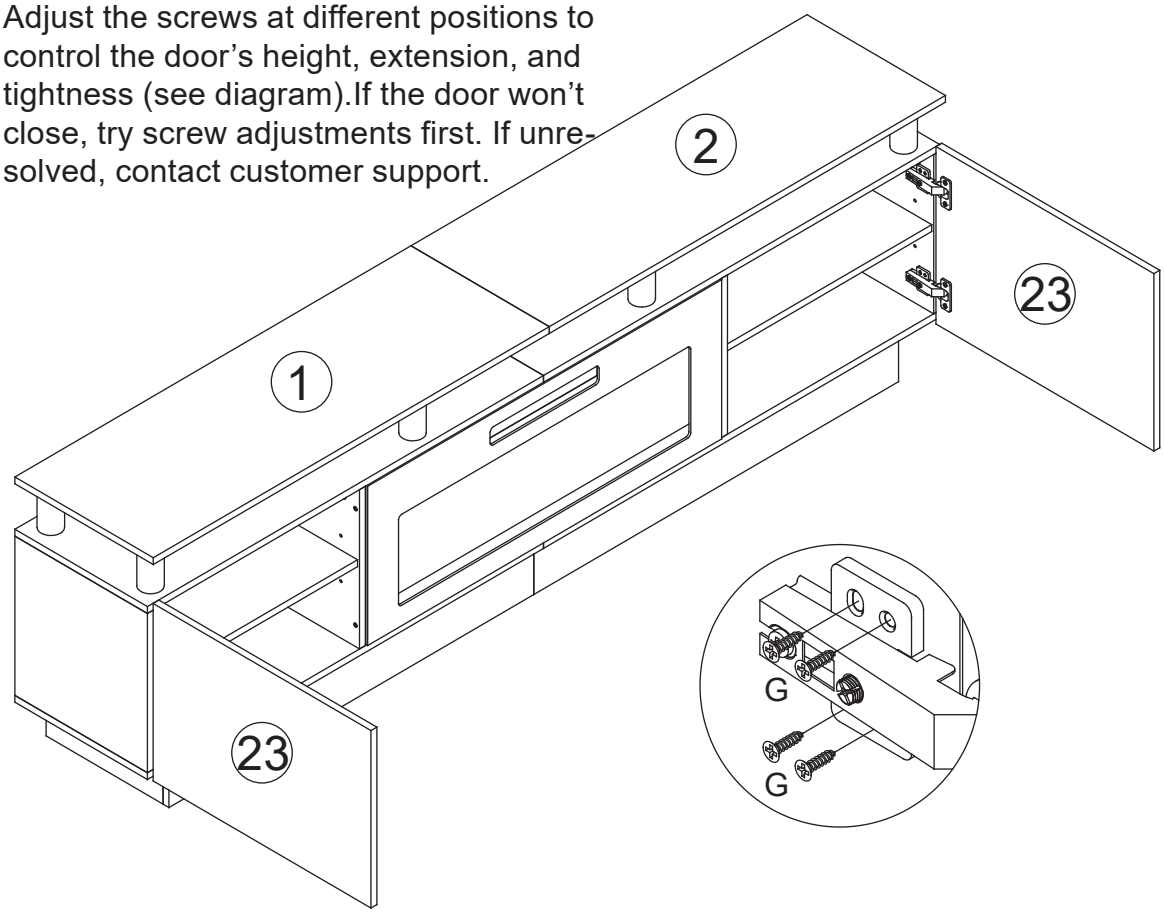

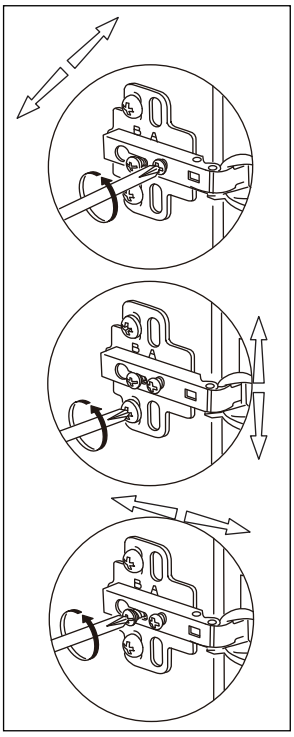

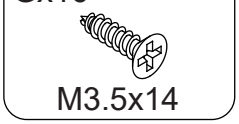

STEP 18

Peel off the cabinet door's protective film.

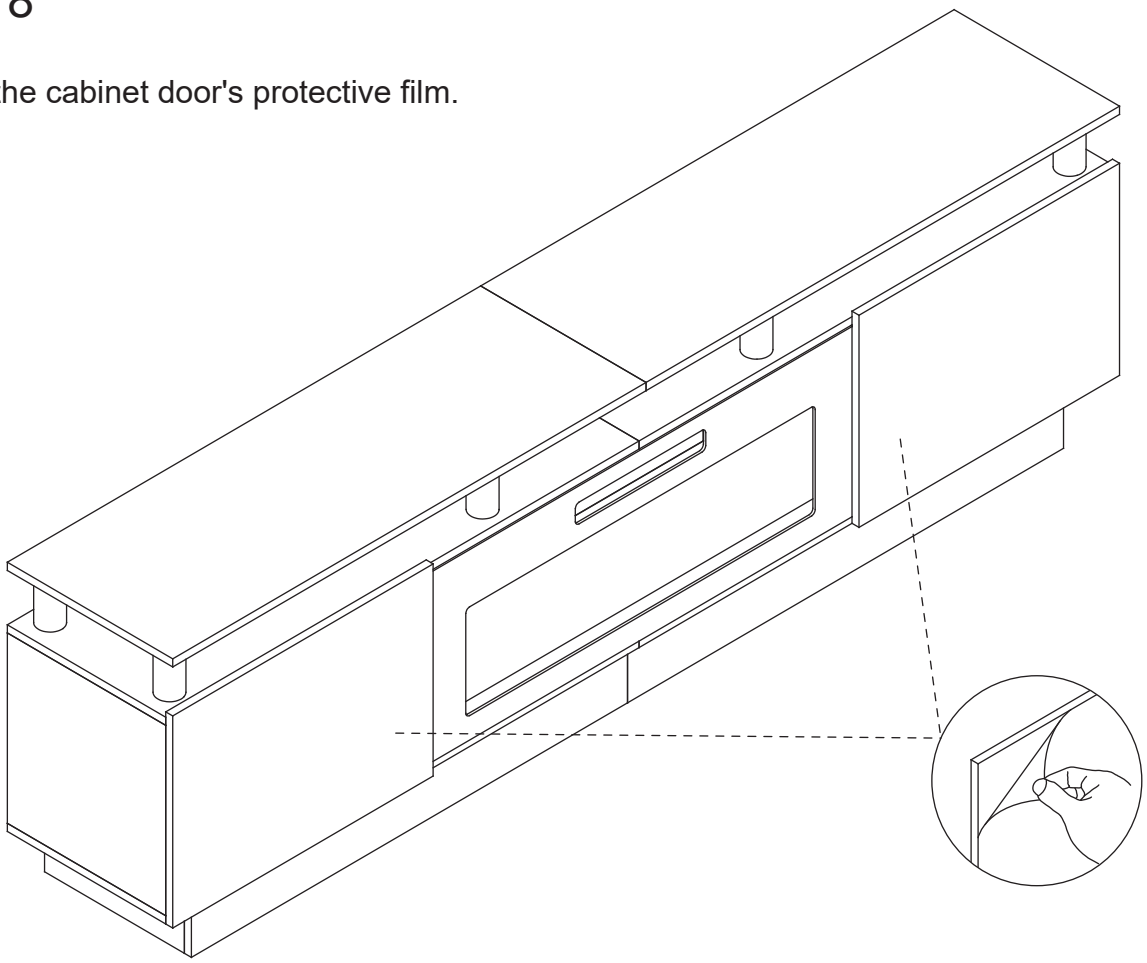

HELP CENTER

WE STAND BEHIND THE QUALITY OF OUR PRODUCT

1. If you have any other issues with your item(s), please feel free to contact us! We will always do our best to come up with a solution that you will be happy with.
2. Please get in touch with our customer service team before returning the item(s).
3. Please do not throw away the original box(es) if you have not finished assembling and confirmed no quality issues.

RETURN POLICY

Length of return period:

You can return the item(s) within 30 days of purchase.
In the meanwhile, everything you purchased from us comes with a one-year warranty.

Who is responsible for the return shipping fee:

We will cover the return shipping fees if:
1. Your item has a manufacturing defect in materials or workmanship. For example, material cracking or screw hole misalignment. We will send you a prepaid shipping label after you send us photos or videos of the defects.
2. Your item has been damaged in transit. For example, metal part is broken or product is damaged. We will send you a prepaid shipping label after you send us photos of the damage.
3. You receive the wrong box(es) due to a warehouse error, We will send you a prepaid shipping label after you send us photos of the item(s), shipping label(s) and words(SKU) on the outer box(es).

* However, we still hope to work with you for a better solution instead of a return. Please don't hesitate to contact our customer service team.

Customer will cover the return shipping fees if:
1. You don't like the item(s) after receiving the box(es).
2. You no longer need the item(s) but have received the box(es).
3. You buy the item(s) by mistake but have received the box(es).
4. Order/shipment cancellation failed, and you have received the box(es).

Return Request

In order to get a full refund as described in this return policy, all items must be:
1. In a brand new/unused condition. Please provide photos before and after packaging.
2. All accessories and parts must be firmly packed in all original packaging before returning. If your return does not meet these requirements, you may not receive a full refund.

When can I receive a refund?

After you return it using the prepaid shipping label we provided and inform us, the refund will be issued once the package(s) have been returned to our warehouse.

What if the product is damaged/defective outside of the valid return period?

We want you to be a happy customer. Please reach out to us via email or text, and we will work on a solution to ensure your satisfaction.

Question about your product? Please do not hesitate to email or text us. We will reply to you within 24-48 hours.

+1(503) 928-7812
hellovitesse@gmail.com
Instagram: vitessegaming
YouTube : vitessegaming

SAVE THESE INSTRUCTIONS