User Manual with Installation

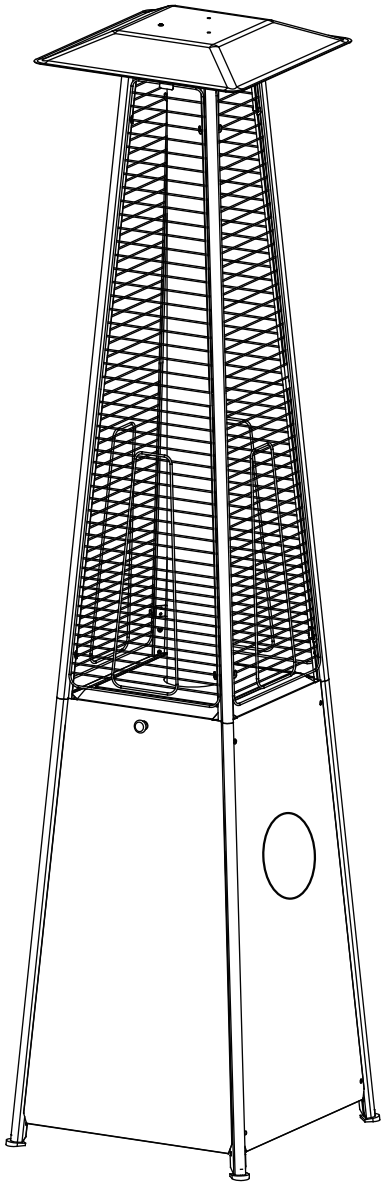

C ETL LISTED US
Intertek
3177588

FOR OUTDOOR USE ONLY.
KEEP THESE INSTRUCTIONS FOR FUTURE REFERENCE.

INSISTS ON THE HIGHEST STANDARD OF QUALITY IN MANUFACTURING.
IN CASE OF ANY ISSUES DO NOT RETURN .
If instructions or parts are missing, contact online wayfair support team.

PACKAGE CONTENTS

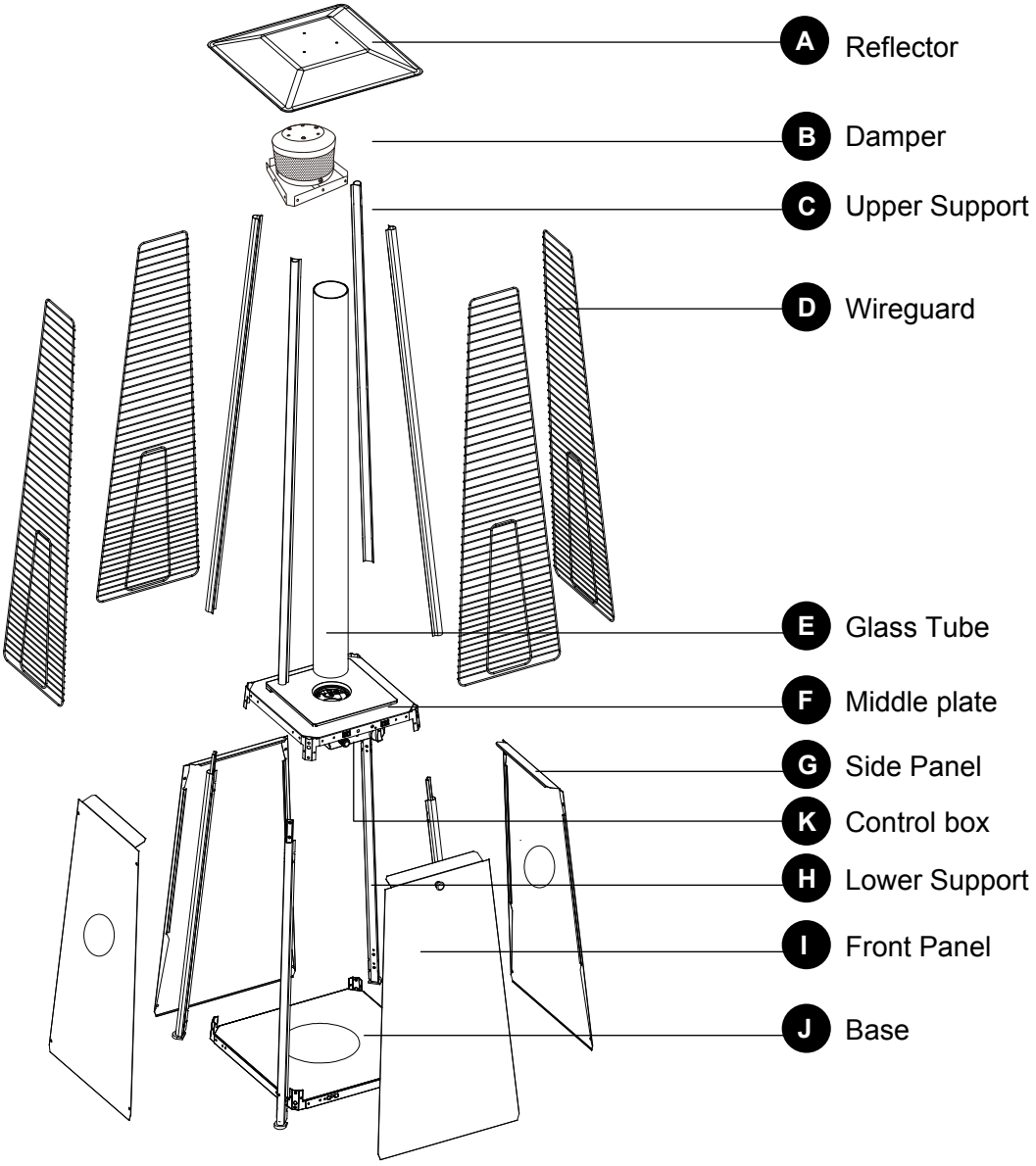

PART	DESCRIPTION	QUANTITY
A	Reflector	1
B	Damper	1
C	Upper Support	4
D	Wireguard	4
E	Glass Tube	1
F	Middle plate	1
G	Side Panel	3
H	Lower Support	4
I	Front Panel	1
J	Base	1
K	Control box	1

HARDWARE CONTENTS (shown actual size)

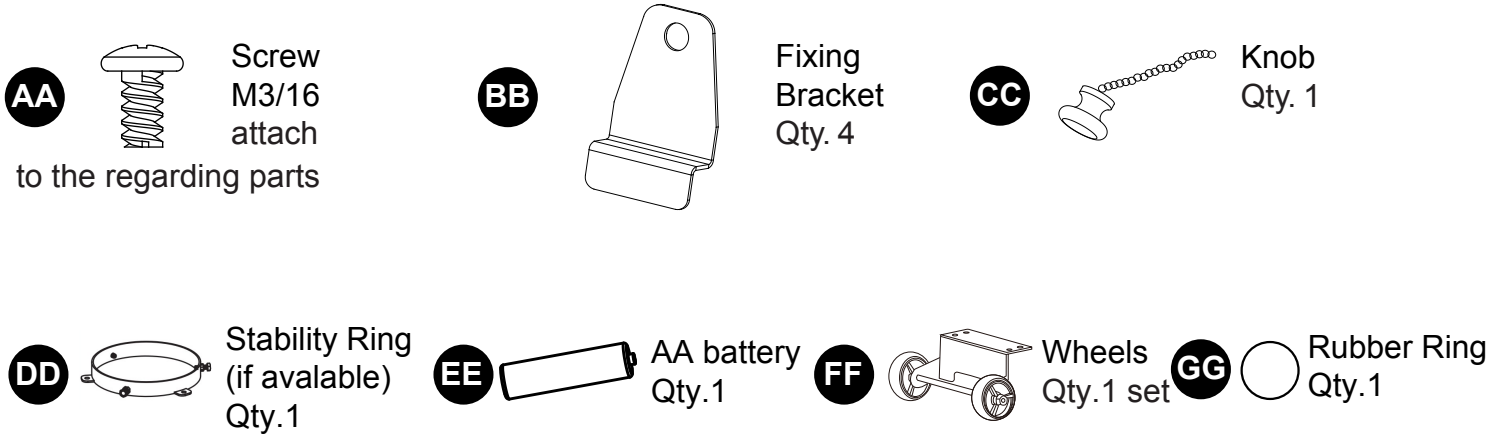

SAFETY INFORMATION

This manual contains important information about the assembly, operation and maintenance of this patio heater. General safety information is presented in these first few pages and is also located throughout the manual. Keep this manual for future reference and to educate new users of this product. This manual should be read in conjunction with the labeling on the product. Safety precautions are essential when any mechanical or propane fueled equipment is involved. These precautions are necessary when using, storing, and servicing. Using this equipment with the respect and caution demanded will reduce the possibilities of personal injury or property damage. The following symbols shown below are used extensively throughout this manual. Always heed these precautions, as they are essential when using any mechanical or fueled equipment.

⚠ DANGER

DANGER indicates an imminently hazardous situation which, if not avoided, will result in death or serious injury.

⚠ DANGER

Failure to comply with the precautions and instructions provided with this heater can result in death, serious bodily injury and property loss or damage from hazards of fire, explosion, burn, asphyxiation, and/or carbon monoxide poisoning. Only persons who can understand and follow the instructions should use or service this heater.

⚠ DANGER

FOR YOUR SAFETY
If you smell gas:
1. Shut off gas to the appliance.
2. Extinguish any open flame.
3. If odor continues, keep away from the appliance and immediately call you gas supplier or fire department.

SAFETY INFORMATION

DANGER

• EXPLOSION - FIRE HAZARD
• Keep solid combustibles, such as building materials, paper or cardboard, a safe distance away from the heater as recommended by the instructions.
• Provide adequate clearances around air openings into the combustion chamber.
• Never use the heater in spaces which do or may contain volatile or airborne combustibles, or products such as gasoline, solvents, paint thinner, dust particles or unknown chemicals.
• During operation, this product can be a source of ignition. Keep heater area clear and free from combustible materials, gasoline, paint thinner, cleaning solvents and other flammable vapors and liquids. Do not use heater in areas with high dust content.
Minimum heater clearances from combustible materials: three (3) feet from the sides & two (2) feet from the top.

DANGER

• EXPLOSION - FIRE HAZARD
• Never store propane near high heat, open flames, pilot lights, direct sunlight, other ignition sources or where temperatures exceed 120 degrees F (49°C).
• Propane vapors are heavier than air and can accumulate in low places. If you smell gas, leave the area immediately.
• Never install or remove propane cylinder while heater is lighted, near flame, pilot lights, other ignition sources or while heater is hot to touch.
• This heater is red hot during use and can ignite flammables too close to the burner. Keep flammables at least 3 feet from sides & 2 feet from top. Keep gasoline and other flammable liquids and vapors well away from heater.
• Store the propane cylinder outdoors in a well ventilated space out of reach of children. Never store the propane cylinder in an enclosed area (house, garage, etc.). If heater is to be stored indoors, disconnect the propane cylinder for outdoor storage.

WARNING

We cannot foresee every use which may be made of our heaters.
Check with your local fire safety authority if you have questions about heater use.
Other standards govern the use of fuel gases and heat producing products for specific uses. Your local authorities can advise you about these.
If no local codes exist, follow National Fuel Gas Code, ANSI Z223.1. In Canada, installation must conform to local codes. If no local codes exist, follow the current National standards of CANADA CAN/CGA-B 149.2.

DANGER

• CARBON MONOXIDE HAZARD
• This heater is a combustion appliance. All combustion appliances produce carbon monoxide (CO) during the combustion process. This product is designed to produce extremely minute, non-hazardous amounts of CO if used and maintained in accordance with all warnings and instructions. Do not block air flow into or out of the heater.
• Carbon Monoxide (CO) poisoning produces flu-like symptoms, watery eyes, headaches, dizziness, fatigue and possibly death. You can't see it and you can't smell it. It's an invisible killer. If these symptoms are present during operation of this product get fresh air immediately!
• For outdoor use only.
• Never use inside house, or other unventilated or enclosed areas.
• This heater consumes air (oxygen). Do not use in unventilated or enclosed areas to avoid endangering your life.

WARNING

WARNING indicates an imminently hazardous situation which, if not avoided, will result in death or serious injury.

WARNING

Do not store or use gasoline or other flammable vapors and liquids in the vicinity of this or any other appliance. An LP-cylinder not connected for use shall not be stored in the vicinity of this or any other appliance.

WARNING: For Outdoor Use Only

DANGER

CARBON MONOXIDE HAZARD
This appliance can produce carbon monoxide which has no odor. Using it in an enclosed space can kill you. Never use this appliance in an enclosed space such as a camper, tent or home.

WARNING

Improper installation, adjustment, alteration, service or maintenance can cause property damage, injury or death. Read the installation, operation and maintenance instructions thoroughly before installing or servicing this equipment.

SAFETY INFORMATION

⚠ WARNING

California Proposition 65
Combustion by-products produced when using this product contain chemicals known to the State of California to cause cancer, birth defects, and other reproductive harm.

⚠ WARNING

BURN HAZARD
- Never leave heater unattended when hot or in use.
- Keep out of reach of children.

⚠ WARNING

Certain materials or items, when stored under the heater, will be subjected to radiant heat and could be seriously damaged.

⚠ CAUTION

SERVICE SAFETY
- Keep all connections and fittings clean. Make sure propane cylinder valve outlet is clean.
- During set up, check all connections and fittings for leaks using soapy water. Never use a flame.
- Use as a heating appliance only. Never alter in any way or use with any device.

⚠ CAUTION

CAUTION indicates an imminently hazardous situation which, if not avoided, may result in minor or moderate personal injury, or property damage.

⚠ WARNING

- This product is fueled by propane gas. Propane gas is invisible, odorless, and flammable. An odorant is normally added to help detect leaks and can be described as a “rotten egg” smell. The odorant can fade over time so leaking gas is not always detectable by smell alone.
- Propane gas is heavier than air and leaking propane will sink to the lowest level possible. It can ignite by ignition sources including matches, lighters, sparks or open flames of any kind many feet away from the original leak. Use only propane gas set up for vapor withdrawal.
- Store or use propane gas in compliance with local ordinances and codes or with ANSI/NFPA 58. Turn off propane when not in use.

⚠ WARNING

- Alert children and adults to the hazards of high surface temperatures. Stay away from these surfaces to avoid burning skin or igniting clothing.
- Carefully supervise young children when in the vicinity of the heater.
- Do not hang clothing or any other flammable materials from the heater, or place on or near the heater.
- Replace any guard or protective device removed for servicing the appliance prior to placing back in service.
- Installation and repair should be done by a qualified service person. The heater should be inspected before use and annually by a qualified service person. More frequent cleaning may be required as necessary. It is imperative that the control compartment, burners, and circulating air passageway of the appliance be kept clean.

PREPARATION

Before beginning assembly of product, make sure all parts are present. Compare parts with package contents list and hardware contents above. If any part is missing or damaged, do not attempt to assemble the product. Contact customer service for replacement parts.

Estimated Assembly Time: 60 minutes

Tools Required for Assembly (not included):
Phillips screwdriver w/ medium blade. Leak Detection Solution.

ASSEMBLY INSTRUCTIONS

1. Attach 1 set wheels(FF) to the base(J), if needed.

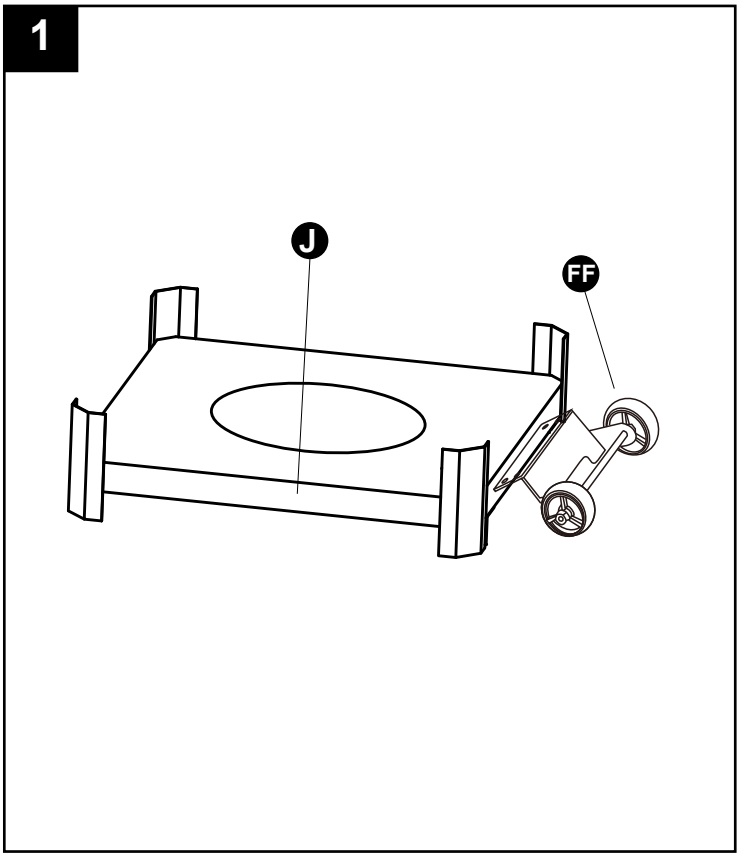

2. Attach the stability ring(DD) to the base (J),if avalable.

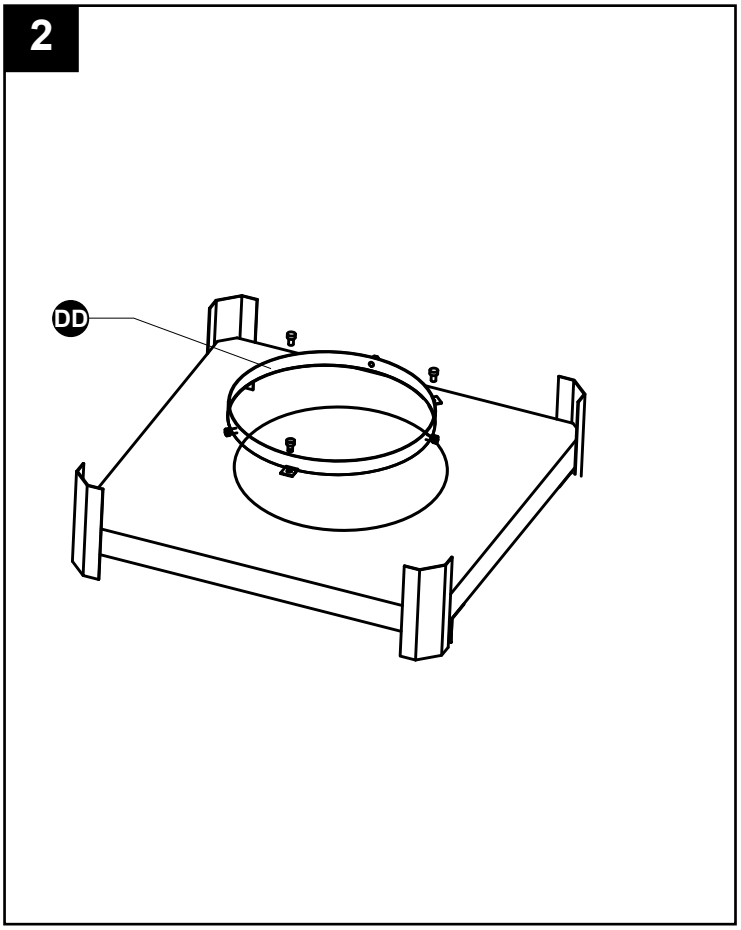

3. Unsrew any pre installed (M3/16) screws(AA) first. Assemble the four lower supports (H) to the base (J) and middle plate（F）using the (M3/16) screws (AA).

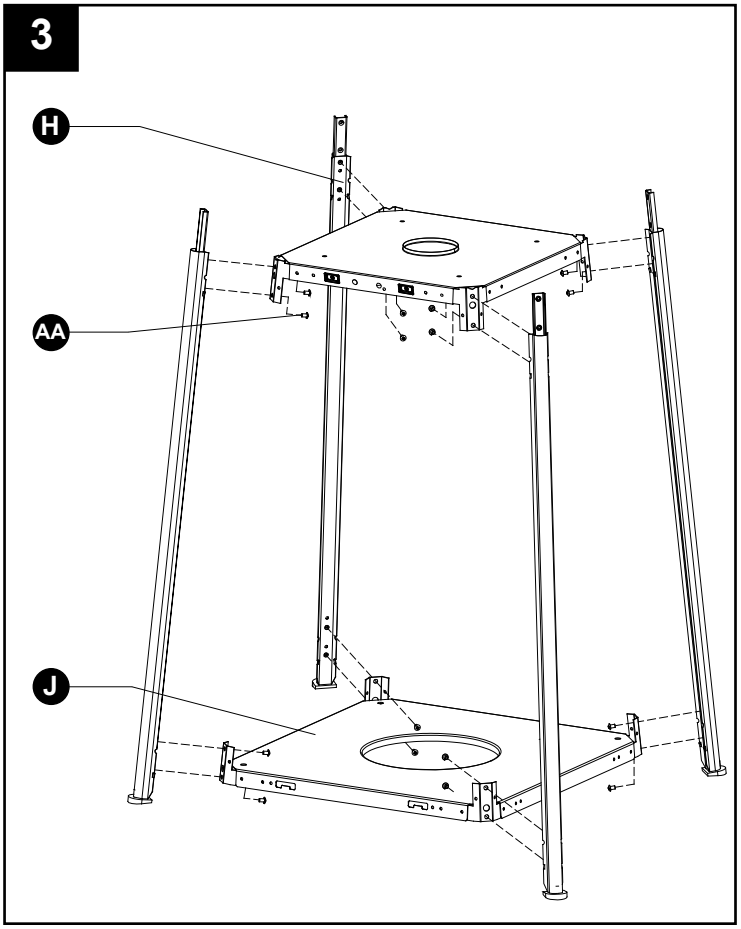

4. Unsrew any pre installed (M3/16) screws(AA) first. Assemble the four upper supports (C) to the lower supports (H) using the (M3/16) screws (AA).
The damper (B) is then assembled to the upper supports (C) using the (M3/16) screws (AA).

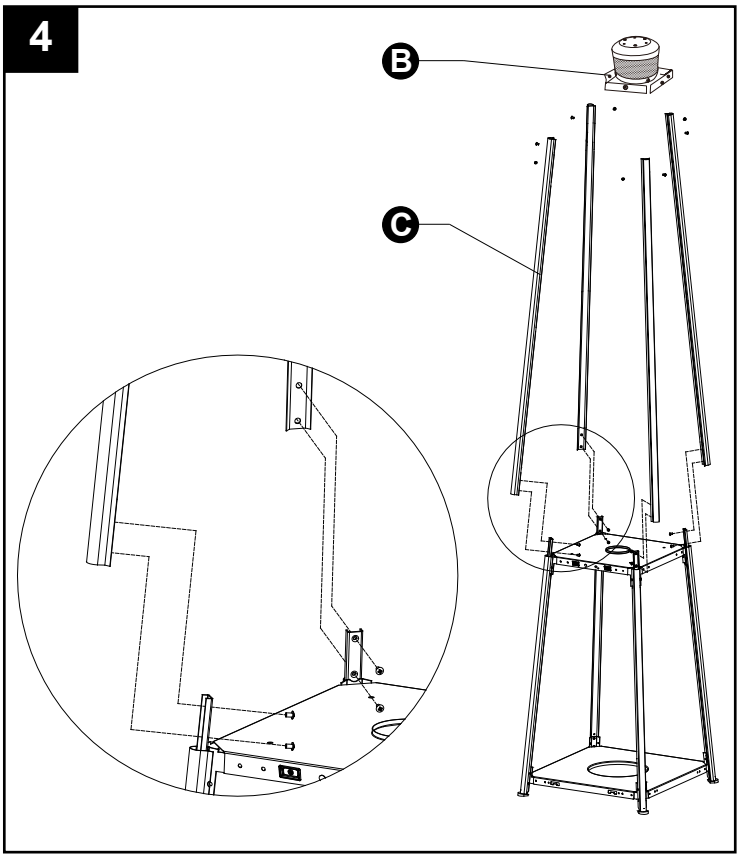

5. Unscrew（M3/16) 4pcs screws from the bottom of the middle plate(F). Install an AA battery(EE) into the control box. Assemble the control box(K) onto the bottom of middle plate using the (M3/16) screws. Note : The control knob is to face to the front of the heater where the magnet is installed in the middle plate.

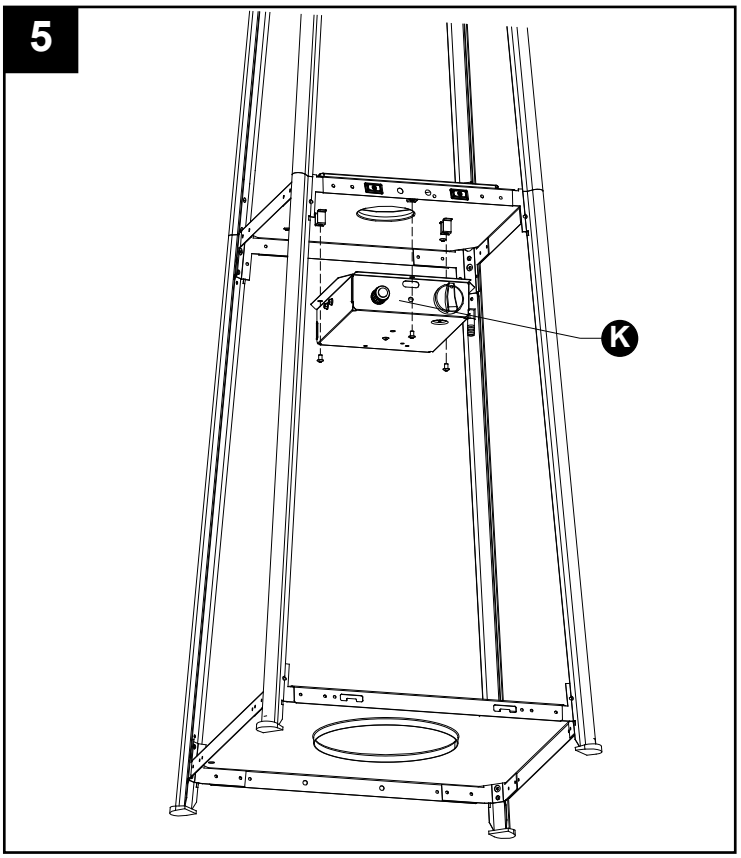

6. Screw the winning screws,washers and the winning nuts to assemble the reflector(A) into the damper(B).

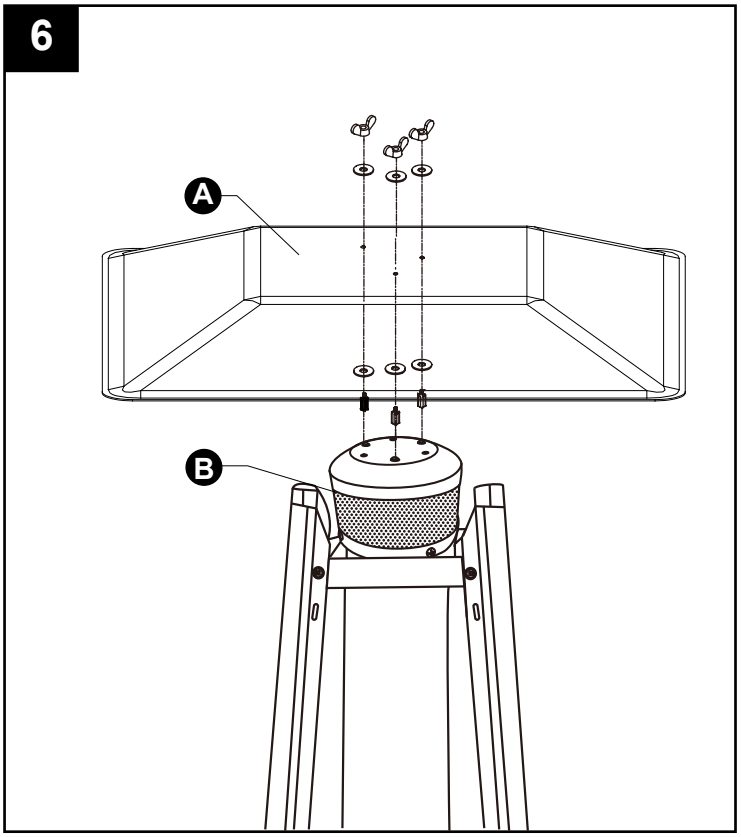

7. Carefully install the glass tube (E) by lifting up and inserting through the center hole in the upper plate. Ensure the rubber ring(GG) is attached to the lower edge of the glass tube as illustrated. Slide the glass tube through the hole of the lower plate cover and onto the middle plate. Check and ensure that the glass tube is positioned properly and is completely covering the center hole of the middle plate.

WARNING! The rubber ring must be in place prior to operating the heater.

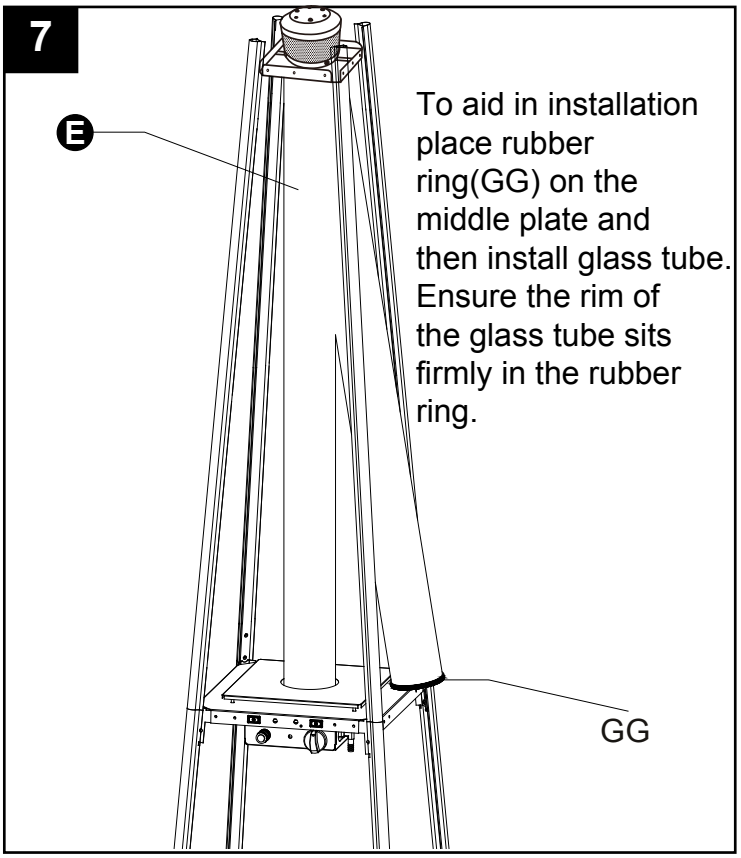

8. Attach the wire guards(D) onto the heater by inserting the hooks into the holes on the frame, (ensure that all of the hooks engage). Unscrew 4pcs screws from damper. Using the (M3/16) screws secure the guards in place by fastening the fixing brackets (BB) to the top of the upper plate and over top of the guards as illustrated. Repeat this procedure until all guards are installed.

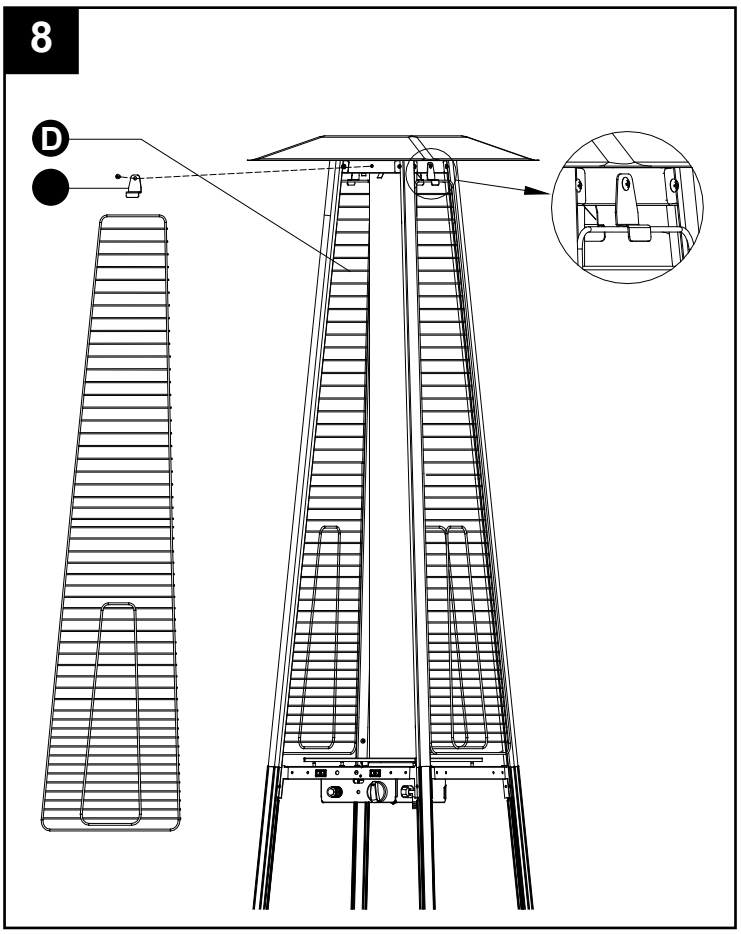

9. Attach the three side panels (G) to the heater using the (M3/16) screws (AA).
Note :
1. M3/16 screws from Step 3 unscrewed from lower supports.
2.Do not cover the front side where the control knob is.

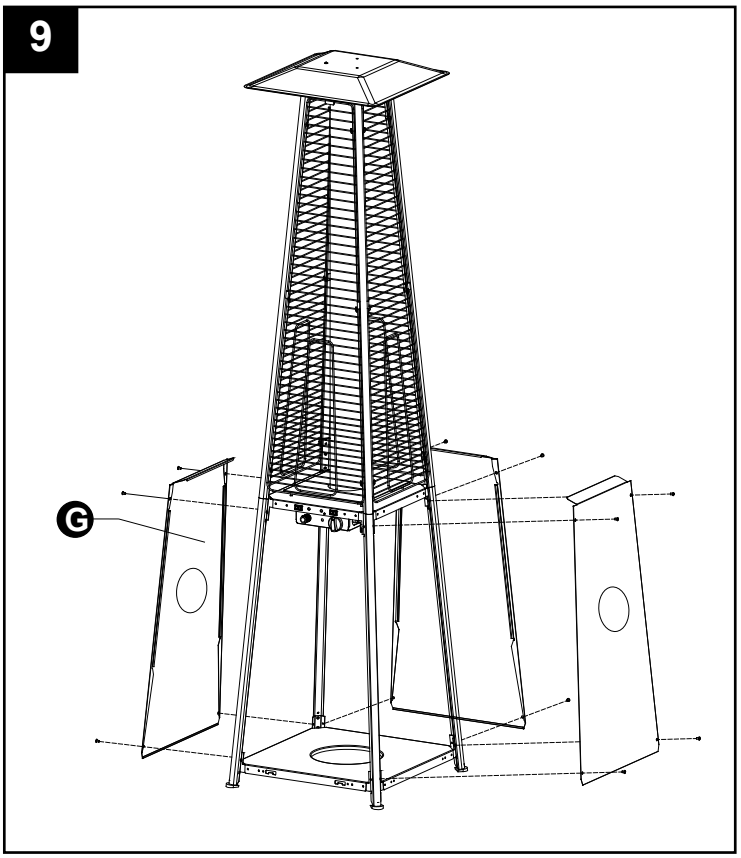

10. Screw the knob (CC) onto the front panel (I). Attach the panel to the heater by inserting the two tabs into the slots on the base (J). Hook the chain (which is preassembled onto the front panel) into the hole in the front of the control box. The chain will keep the panel from falling forward while lighting /operating your heater.

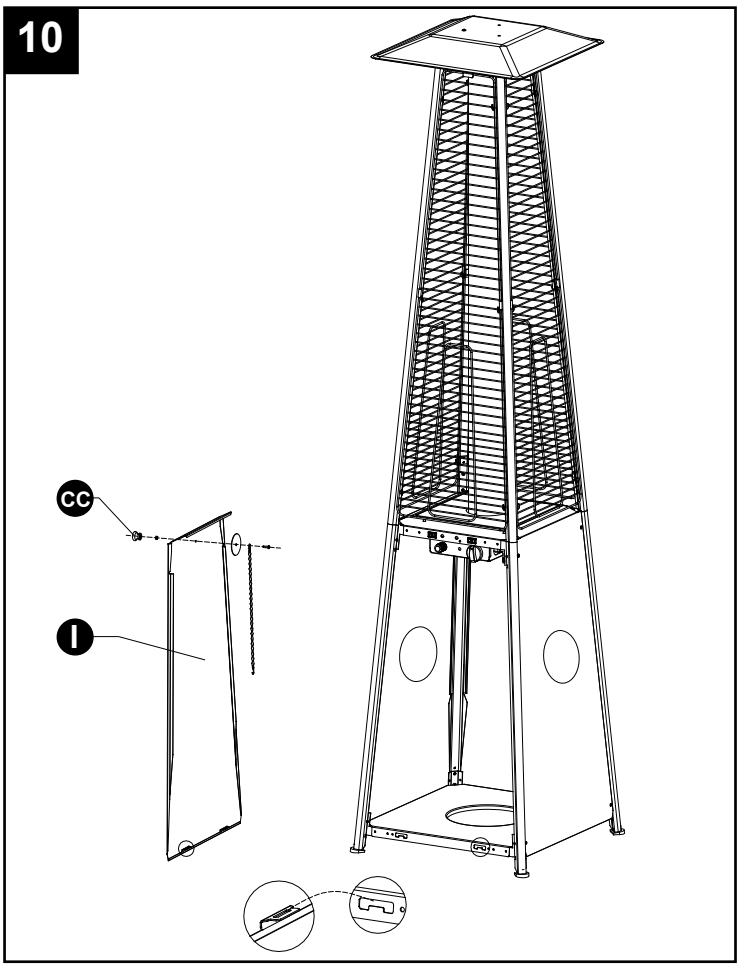

11. Propane Only-Proper Hose Connection.
Connect the hose to the hose connector in the control box.
WARNING! Ensure the hose does not contact any high temperature surfaces, or it may melt and leak causing a fire.
Always test the hose and connections for leak with soapy water at the end of all connections.

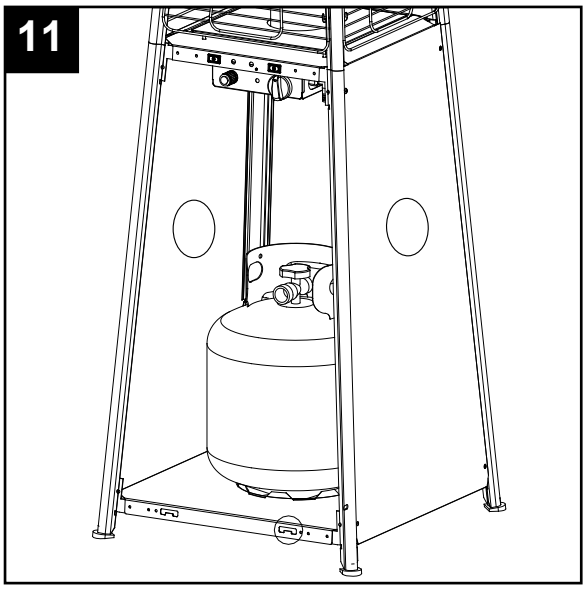

12. Connect hose and regulator to cylinder.
The propane gas and cylinder are sold separately.
Use a standard 20 lb. propane cylinder only.
Use this heater only with a propane vapor withdrawal supply system. See chapter 12 of the standard for storage and handling of liquefied petroleum gas, ANSI/NFPA 58. Your local library or fire department should have this book.
A minimum supply pressure of 0.4 p.s.i. is required for the purpose of input adjustment for propane gas. Storage of an appliance indoors is permissible only if the cylinder is disconnected and removed from the appliance. A cylinder must be stored outdoors in a well-ventilated area out of the reach of children. A disconnected cylinder must have dust caps tightly installed and must not be stored in a building, garage or any other enclosed area. The minimum permissible gas supply pressure of 10 W.C. is required for purpose of input adjustment. The minimum hourly of 17000 Btu is required input rating for a heater for automatic operation at ratings less than full input rating. The pressure regulator and hose assembly supplied with the appliance must be used. The installation must conform with local codes, or in the absence of local codes,with national fuel gas code, ANSI Z223.1 /NFPA54, natural gas and propane Installation Code, CSA B149.1, or propane storage and handling code, B149.2.

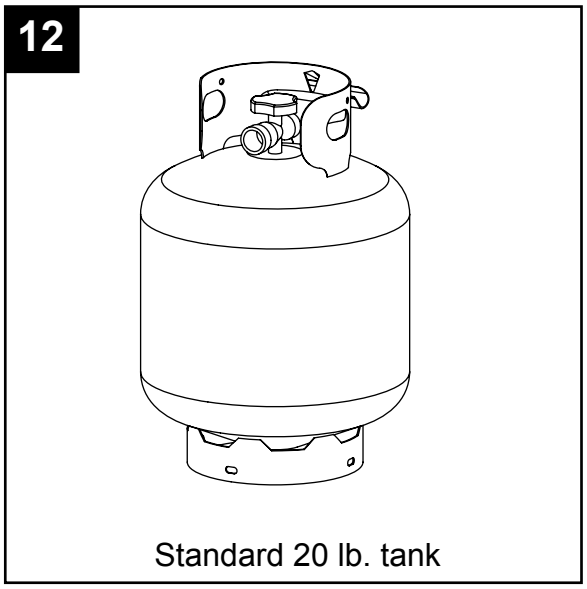

A dented, rusted or damaged propane cylinder may be hazardous and should be checked by your cylinder supplier. Never use a propane cylinder with a damaged valve connection.

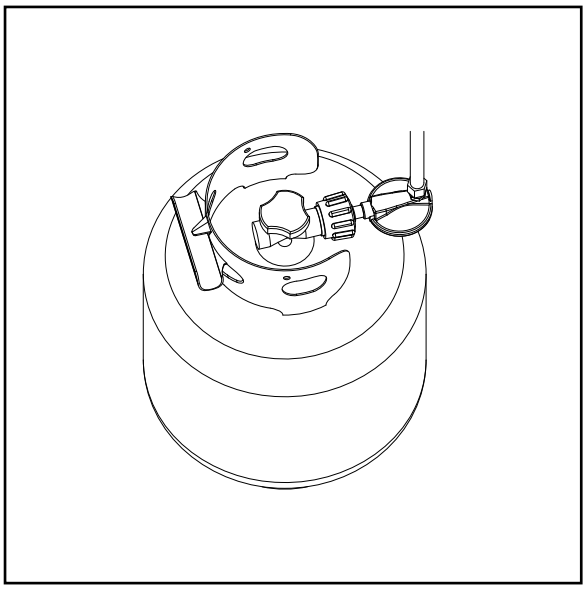

The propane cylinder must be constructed and marked in accordance with the specifications for LP gas cylinders of the U.S. Department of Transportation (DOT) or the standard for cylinders, spheres and tubes for transportation of dangerous goods and commission, CAN/CSA-B339.

The cylinder must have a listed overfilling prevention device.

The cylinder must have a connection device compatible with the connection for the appliance.

The cylinder used must include a collar to protect the cylinder valve.

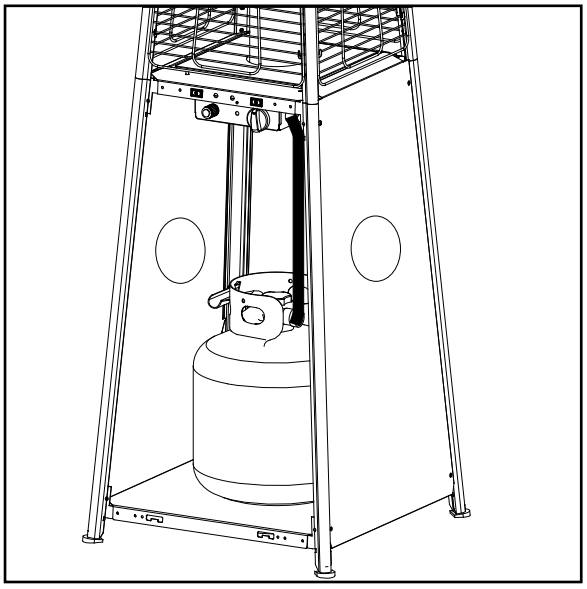

Never connect an unregulated propane cylinder to the heater.

Attach regulator to cylinder.Complete attachment.

Install cylinder.

- Do not store a spare LP-gas cylinder under or near this appliance;
- Never fill the cylinder beyond 80 percent full;
- “Place the dust cap on the cylinder valve outlet whenever the cylinder is not in use. Only install the type of dust cap on the cylinder valve that is provided with the cylinder valve. Other type of caps or plugs may result in leakage of propane.”

Leak Check

⚠ WARNING

- Perform all leak tests outdoors.
- Extinguish all open flames.
- NEVER leak test when smoking.
- Do not use the heater until all connections have been leak tested and do not leak.

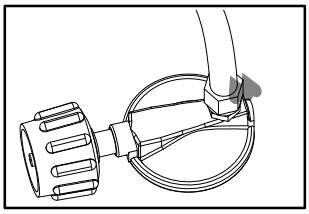

Hose / Regulator connection

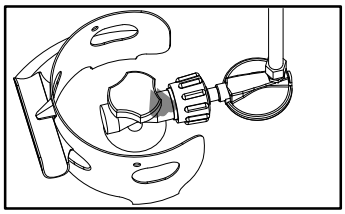

Regulator / Cylinder connection

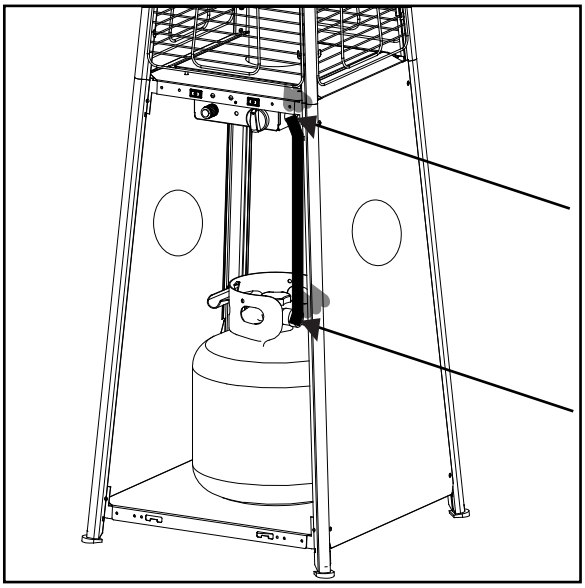

1. Make 2-3 oz. of leak check solution (one part liquid dishwashing detergent and three parts water).
2. Apply several drops of solution where hose attaches to regulator.
3. Apply several drops of solution where regulator connects to cylinder.
4. Make sure all patio heater and light valves are OFF.
5. Turn cylinder valve ON.

If bubbles appear at any connection, there is a leak.

1. Turn cylinder valve OFF.
2. If leak is at hose/regulator connection: tighten connection and perform another leak test. If bubbles continue appearing, the hose should be returned to the place of purchase.
3. If leak is at regulator/cylinder valve connection: disconnect, reconnect, and perform another leak check. If you continue to see bubbles after several attempts, cylinder valve is defective and should be returned to cylinder's place of purchase.

If NO bubbles appear at any connection, the connections are secure.

NOTE: *Whenever gas connections are loosened or removed, you must perform a complete leak test.*

4. Complete installation.

OPERATION INSTRUCTIONS

⚠ DANGER

- CARBON MONOXIDE HAZARD
- For outdoor use only. Never use inside house, or other unventilated or enclosed areas. This heater consumes air (oxygen). Do not use in unventilated or enclosed areas to avoid endangering your life.

Caution: *Do not attempt to operate until you have read and understand all General Safety Information in this manual and all assembly is complete and leak checks have been performed.*

Before Turning Gas Supply ON:
1. Your heater was designed and approved for outdoor use only. Do NOT use it inside a building, garage, or any other enclosed area.
2. Make sure surrounding areas are free of combustible materials, gasoline, and other flammable vapors or liquids.
3. Ensure that there is no obstruction to air ventilation. Be sure all gas connections are tight and there are no leaks.
4. Be sure the cylinder cover is clear of debris. Be sure any component removed during assembly or servicing is replaced and fastened prior to starting.

Before Lighting:
1. Heater should be thoroughly inspected before each use, and by a qualified service person at least annually. If relighting a hot heater, always wait at least 5 minutes.
2. Inspect the hose assembly for evidence of excessive abrasion, cuts, or wear. Suspected areas should be leak tested. If the hose leaks, it must be replaced prior to operation. Only use the replacement hose assembly specified by manufacturer.

LIGHTING INSTRUCTIONS
Check and ensure that an AA battery is inside the ignition chamber and has power.
Ensure the anode(+) faces outside.

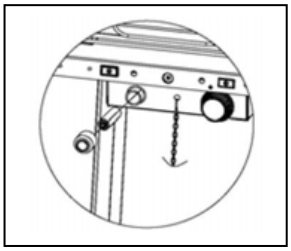

1.Ensure that the control knob is OFF. Slowly open the gas cylinder valve.
2.Press and turn the control knob to LIGHT position, push the igniter to generate spark while keeping control knob in pressed position

3.Check for pilot flame through glass tube. If pilot does not light, turn control knob to ‘OFF’ position wait two minutes minimum and try again from the start. Some attempts may be necessary.
4.If the pilot alight, keep control knob pressed for 15 seconds then turn the control knob to ‘LOW’.
5.For maximum heat turn control knob to ‘HIGH’.
6.To turn heater off, turn control knob to ‘OFF’.
7.Close the vlave of the gas cylinder or the regulator after use.

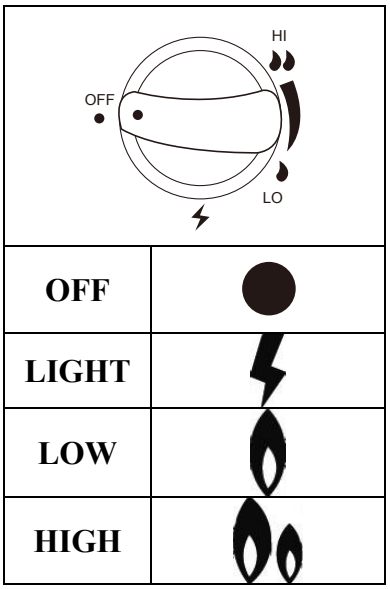

CLEANING AND MAINTENANCE:

To enjoy outstanding performance of your heater for years make sure to perform the following maintenance activities on a regular basis:
● Keep exterior surfaces clean.
-Use warm soapy water for cleaning. Never use flammable, corrosive or abrasive cleaners.
-While washing your unit, be sure to keep the area around the burner and pilot assembly dry at all time. If the gas control is exposed to water in any way, do NOT try to use it. It must be replaced.
● After a long break from operation, the unit should be inspected for spiders, spider webs or other insects.
● Air flow must be unobstructed. Keep controls. Burner and circulating air passageways clean.
Signs of possible blockage include:
-Gas odour with extreme yellow tipping of flame.
-Heater does NOT reach the desired temperature.
-Heater glow is excessively uneven.
-Heater makes popping noises.
● Spider and insects can nest in burner or orifices.
This dangerous condition can damage heater and render it unsafe for use. Clean burner holes by using a heavy-duty pipe cleaner.
Compressed air may help clear away smaller particles.
● Carbon deposits may create a fire hazard. Clean reflector and glass tube inside with soapy water if any carbon deposits develop. Always be careful when cleaning the glass tube.

STORAGE:
Between uses:
Turn the control knob to “OFF” position.
● Turn LPG cylinder to “OFF” position.
● Store heater upright in an area sheltered away from weather conditions (such as rain, sleet, hail, snow).
● If desired, cover heater to protect exterior surfaces and to help prevent dust and debris collecting in air passages.

During periods of extended inactivity or when transporting:
● Turn the control knob to “OFF” position.
● Disconnect LPG Cylinder and move to a secure, well-ventilated location outdoors.
DO NOT store in a location that will exceed 50 degrees C.
● Store heater upright in an area sheltered away from weather conditions (such as rain, sleet, hail, snow).
● If desired, cover heater to protect exterior surfaces and to help prevent dust and debris collecting in air passages.

⚠ WARNING

FOR YOUR SAFETY:
● DO NOT touch or move heater for at Least 45 minutes after use.
● Allow all burner elements to cool before Touching.

⚠ NOTE

In a salt-air environment (such as near an Ocean) corrosion occurs more quickly than normal.
● Frequently check for corroded areas and Repair them promptly.
● Wait until heater is cool before covering.

TROUBLESHOOTING

PROBLEM	POSSIBLE CAUSE	CORRECTIVE ACTION
Pilot won't light Note: Heater operates at reduced efficiency below 40ºF (5ºC)	Cylinder valve is closed	Open valve
	Blockage in orifice or pilot tube	Clean or replace orifice or pilot tube
	Air in gas line	Open gas line and bleed it (pressing control knob in) for not more than 1 - 2 minutes or until you smell gas
	Low gas pressure with cylinder valve fully open	Turn cylinder valve OFF and replace cylinder
	Igniter fails	Use match to light pilot; obtain new igniter and replace
Pilot won't stay lit	Dirt built up around pilot	Clean dirt from around pilot
	Connection between gas valve and pilot assembly is loose	Tighten connection and perform leak check
	Thermocouple is not operating correctly	Replace thermocouple
Burner won't light	Propane cylinder is frosted over	Wait until the propane cylinder warms up and becomes unfrosted
	Blockage in orifice	Clear blockage
	Control knob is not in ON position	Turn control knob to ON
Burner flame is low	Gas pressure is low	Turn cylinder valve OFF and replace cylinder
	Outdoor temperature is less than 40ºF and tank is less than 1/4 full	Use a full cylinder
	Control knob fully ON	Check burner and orifices for blockage
Carbon build-up Thick black smoke	Dirt or film on reflector and burner screen	Clean reflector and burner screen
	Blockage in burner	Remove blockage and clean burner inside and outside