outline drawing:

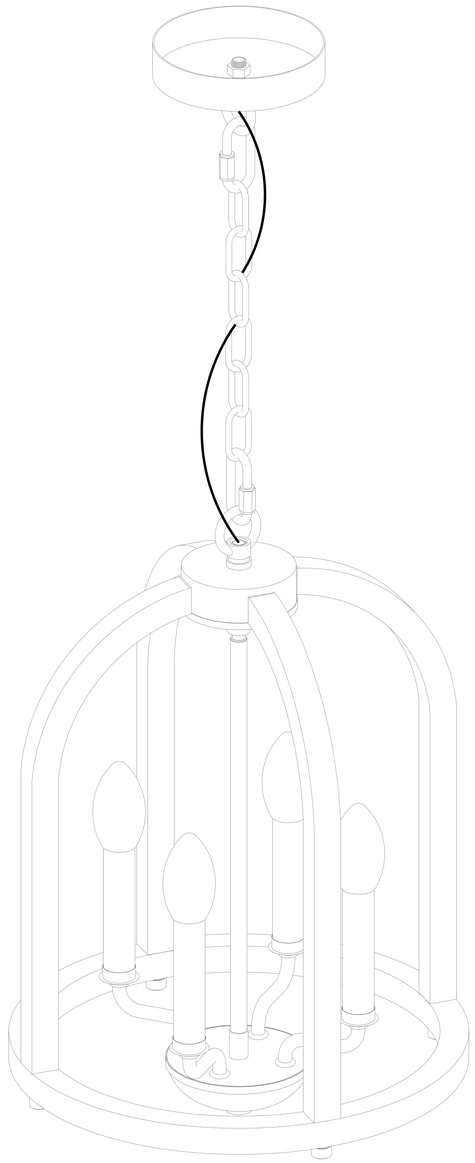

model:

Technical data: Power supply voltage 110-120V, bulb type E12Max40Wx4PCS (not included)

CAUTION

- Before installing the lighting fixtures, please check the insulation of the wires for any cuts, wear, or possible damage during transportation。If the wires are defective, do not attempt installation 。
- In some countries, electrical installation work can only be carried out by authorized electrical contractors。Please contact the local power department for advice。

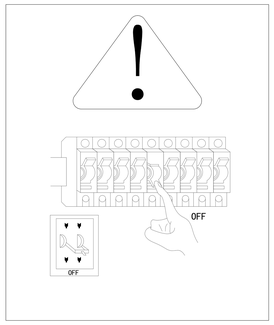

IMPORTANT Before starting the installation work, please make sure to cut off the power supply to the circuit。

IMPORTANT Keep children away from the installation process 。

Required tools (not included):

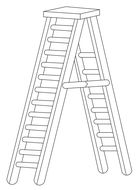

Ladder

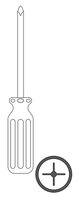

Phillips screwdriver

pincers

Required tools (including):

Hex Wrench

Socket Wrench

glove

The hardware kit provides:

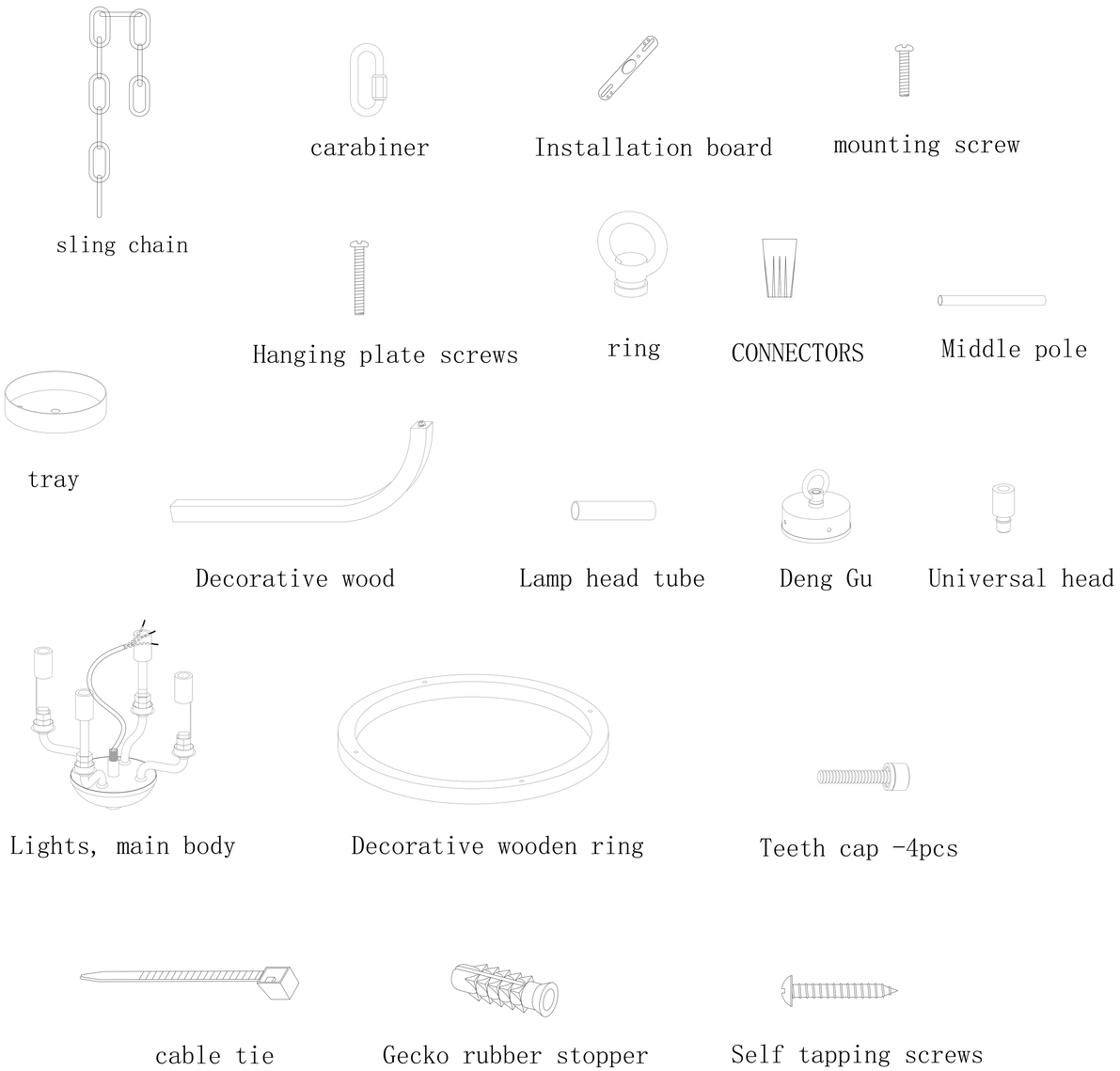

• The components displayed on each lamp may vary slightly

step 1

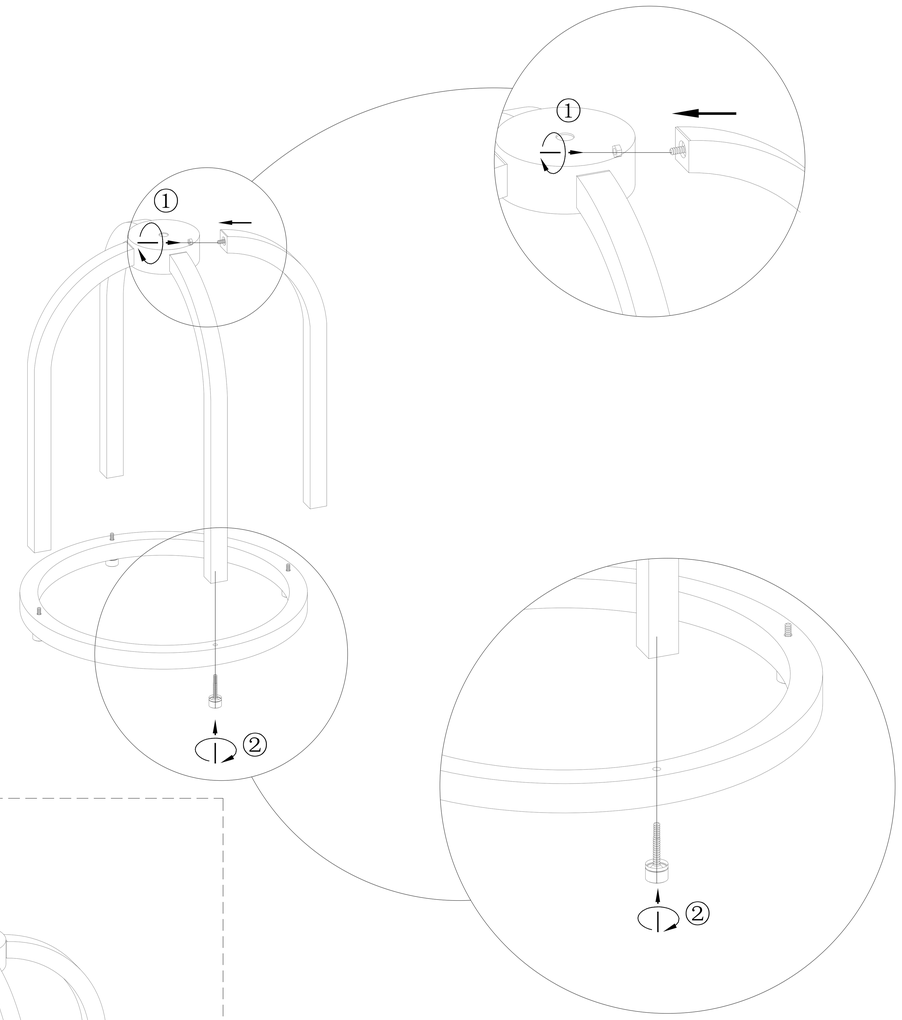

Installation
completion effect

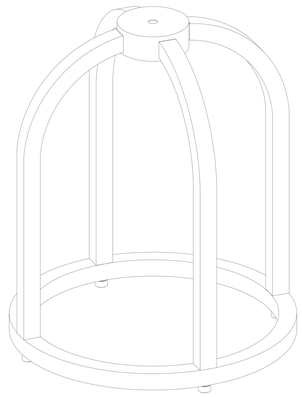

① Insert the tooth rod at one end of the decorative wood into the lamp hole, and tighten the nut to the tooth rod。

② Thread the tooth rod on the tooth rod cap through the hole on the decorative wood ring and tighten it with the inner tooth hole on the decorative wood。

Step 2

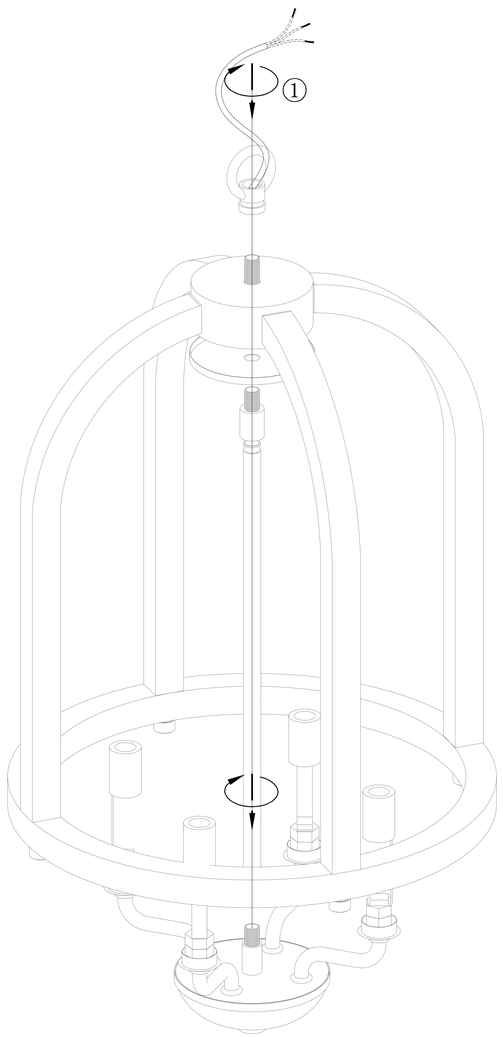

① Tighten the hanging ring, lamp ancient, middle pole, lamp, and main body connection。

Step 3

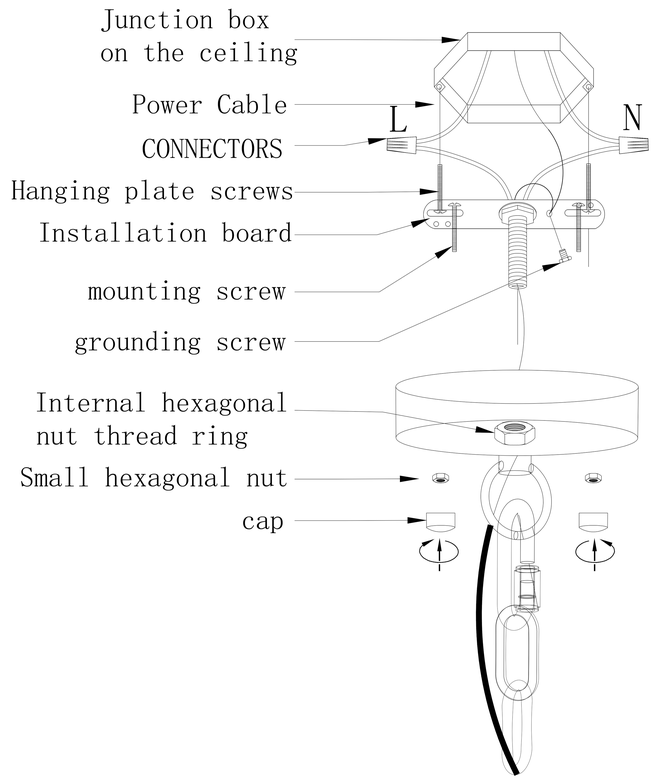

① Thread all the wires through the canopy and installation kit。

② Connect the power cable with two cable connectors。

③ Connect the grounding wire and tighten it with the grounding screw。

④ Install the fixing screws into the mounting plate, install the installation unit under the junction box, and tighten with two mounting screws。

⑤ Fix the canopy in place using a suspension ring. Tighten the screw ring and hex nut with a wrench to tighten the hex nut。

⑥ Tighten the fixing screws on the rain shelter holes。

⑦ Tighten the cap tightly。

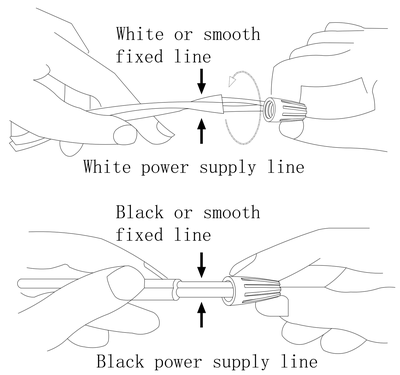

Connect the black or red wire (with an L sticker on the wire) to:	Connect the white wire (with N stickers on the wire) to:
black	white
Parallel lines - pti&l (circular and smooth)	Parallel lines - spri&l (square and ridge shaped)
Transparent, brown, gold or black (without tracer)	Transparent, brown, gold or black (with tracer)
Copper core insulated wire (excluding GREEN)	Silver conductor insulated wire (excluding GREEN)

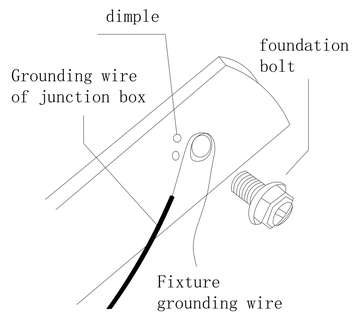

Step 4

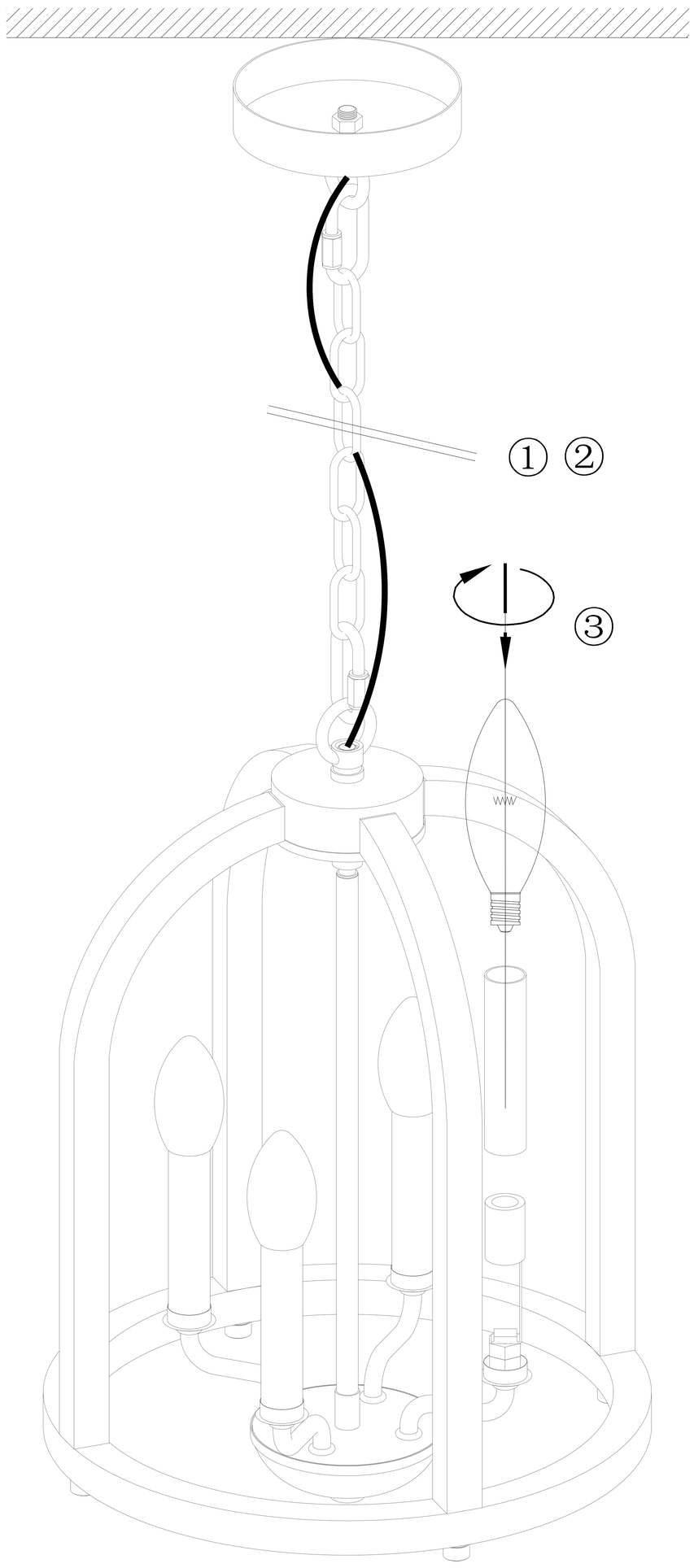

①② This depends on the height of your ceiling and the desired suspension length. You can measure the chain and adjust the locking buckle to achieve the desired chain length。

③ Place the lamp head tube on the lamp head and tighten the bulb (E12 maximum 40W, not included)。