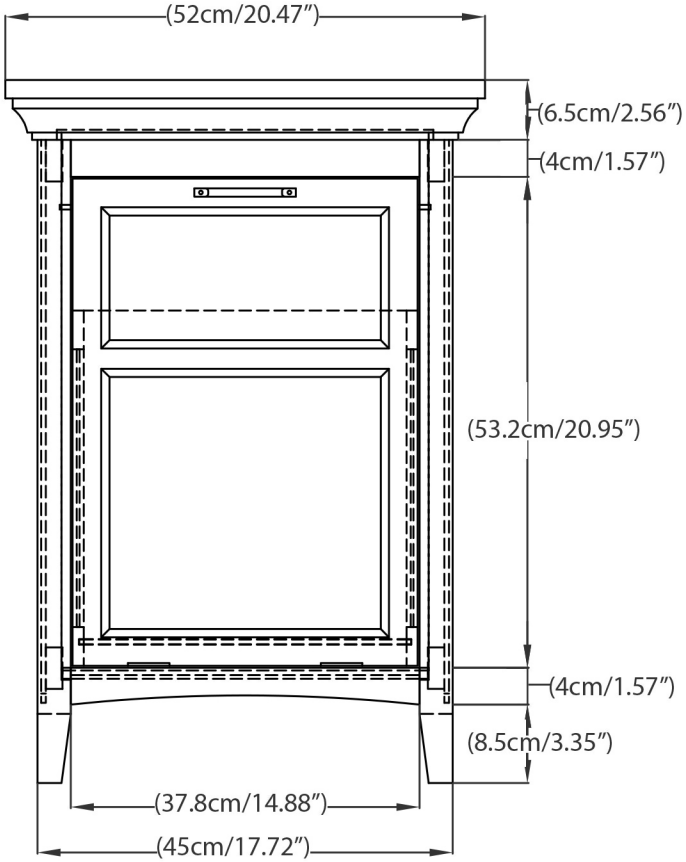

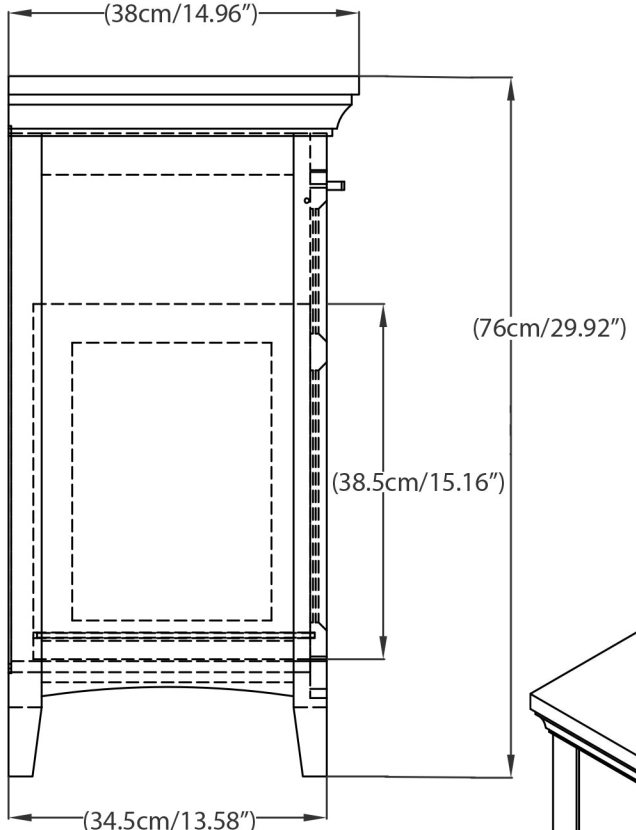

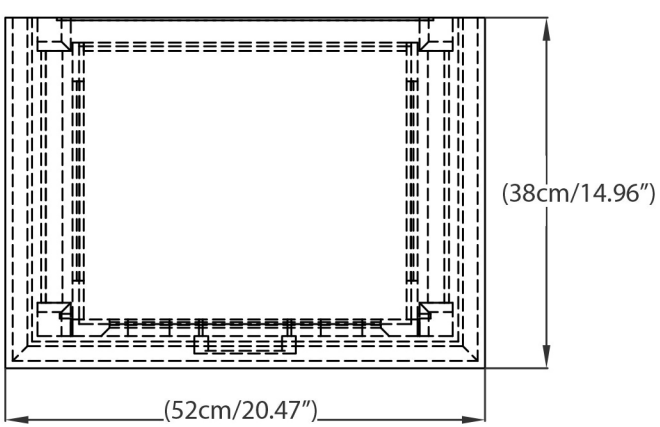

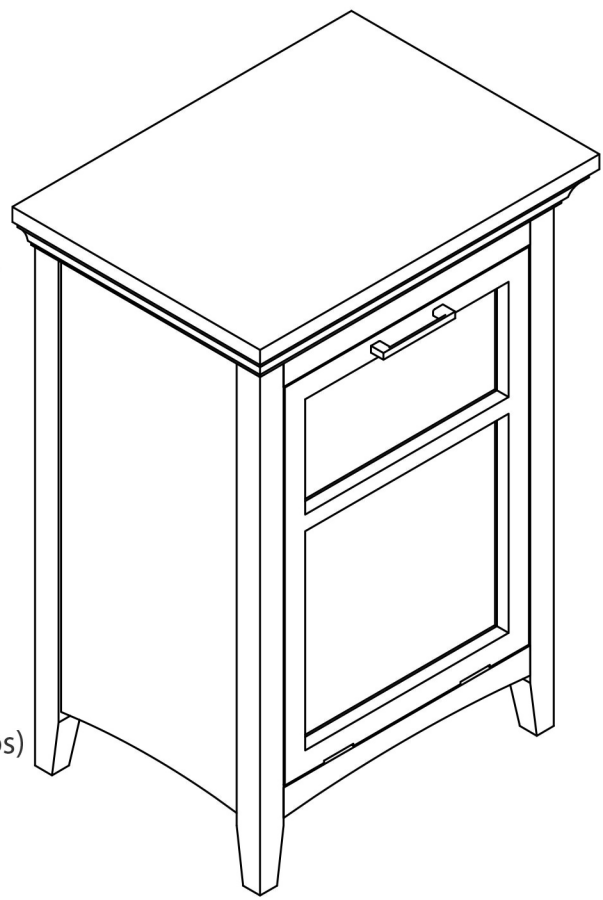

Net Weight: 32.88(lbs)