SHOWER HEAD

C10.RH03

CRANACH
BATH & KITCHEN

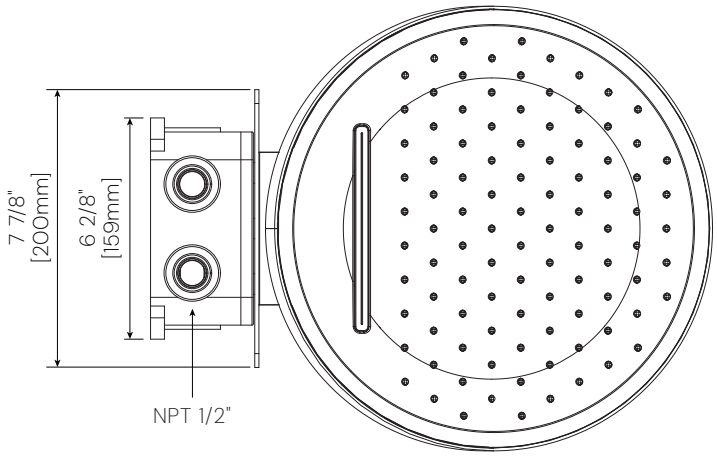

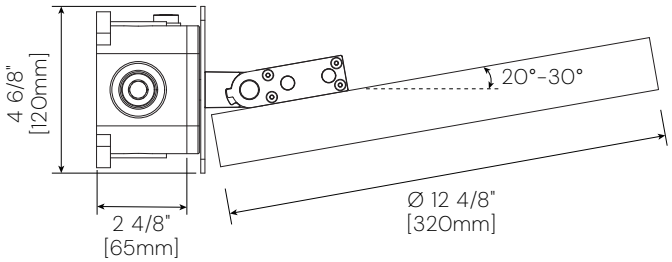

FEATURES

- Rain Spray
  Wide and even water flow, relaxing and spa-like sensation.
- Water Fall
  Gentle cascading water flow, natural and relaxing experience.
- Easy Clean Spray Nozzles
  Lime and calcium buildup prevention, hassle-free maintenance.
- Solid Stainless Construction
  Premium stainless steel, durable and rust-resistant.

SPECIFICATION

- Wall-mounted
- Size: Ø 12 4/8" (320mm)
- Inlet: NPT 1/2" female connection
- Finish Availability: Polished Chrome/Matte Black/Brushed Nickel/Brushed Gold

FLOW

- 1.8/2.5 GPM @ 80 PSI MAX

WARRANTY

- Parts and Finish: Limited lifetime warranty for residential, or 10 years for commercial purchasers and multi-family (apartments and condominiums) residential, in each case from the date of purchase.

STANDARDS

- ASME A112.18.1/CSA B125.1

Cranach deserves the right to make changes in specifications and materials and to change or discontinue models both without notice or obligation. Dimensions are only for reference only.

HAND SHOWER

C90.HS03

CRANACH
BATH & KITCHEN

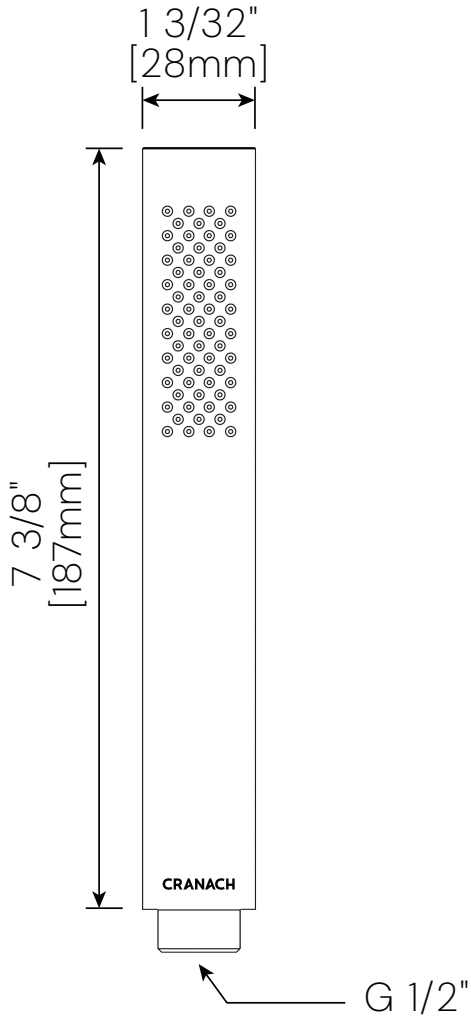

FEATURES

- Single Function
  Single stream full body coverage engineered for total immersion.
- Easy Clean Spray Nozzles
  Lime and calcium buildup prevention, hassle-free maintenance.
- All Metal Construction
  Durable metal build, superior strength and long-lasting reliability.

SPECIFICATION

- Inlet: G 1/2" male connection
- Finish Availability: Polished Chrome/Matte Black/Brushed Nickel/ Brushed Gold
- Hose and holder not Included

FLOW

- 1.8/2.5 GPM @ 80 PSI MAX

WARRANTY

- Parts and Finish: Limited lifetime warranty for residential, or 10 years for commercial purchasers and multi-family (apartments and condominiums) residential, in each case from the date of purchase.

STANDARDS

- ASME A112.18.1/CSA B125.1

Cranach deserves the right to make changes in specifications and materials and to change or discontinue models both without notice or obligation. Dimensions are only for reference only.

TIRM & VALVE

C66.RH01

CRANACH
BATH & KITCHEN

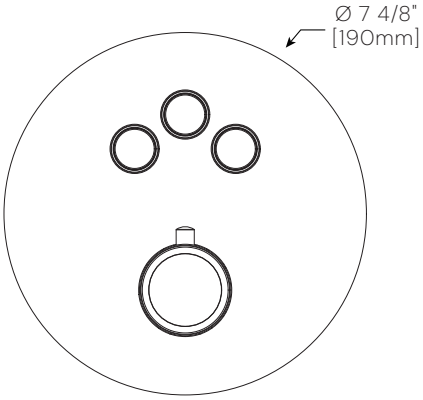

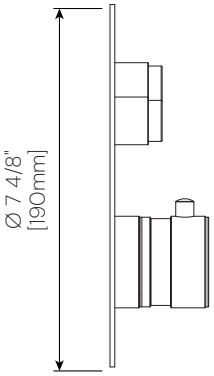

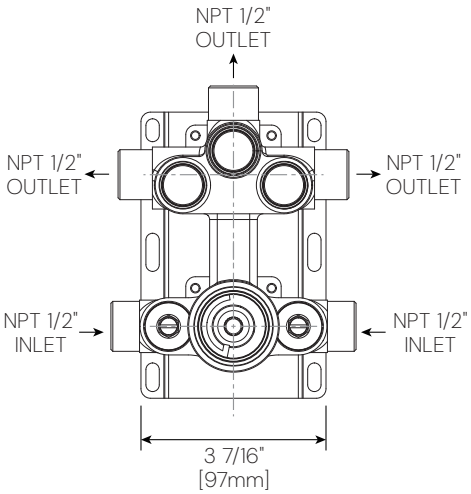

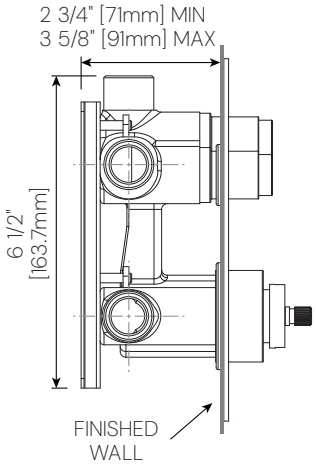

FEATURES

- Thermostatic Valve
  Precise temperature control, reliable operation, and improved user safety.
- 3 Outlets
  Three independent outlets operable singly or in any combination.
- Corrosion-Resistant Finish
  Resilient coating, defense against corrosion and wear.
- All Metal Construction
  Durable metal build, superior strength and long-lasting reliability.

SPECIFICATION

- Thermostatic cartridge locks temperature at 38°C/100°F
- Top button controls diverter function
- Bottom knob controls temperature
- Inlet: NPT 1/2" female connection
- Outlet: NPT 1/2" male connection
- Finish Availability: Polished Chrome/Matte Black/Brushed Nickel/Brushed Gold
- Cartridges included

FLOW

- 8.5 GPM @ 80 PSI MAX

WARRANTY

- Parts and Finish: Limited lifetime warranty for residential, or 10 years for commercial purchasers and multi-family (apartments and condominiums) residential, in each case from the date of purchase.

STANDARDS

- ASME A112.18.1/CSA B125.1

Cranach deserves the right to make changes in specifications and materials and to change or discontinue models both without notice or obligation. Dimensions are only for reference only.

ACCESSORIES

C90.HH23

CRANACH
BATH & KITCHEN

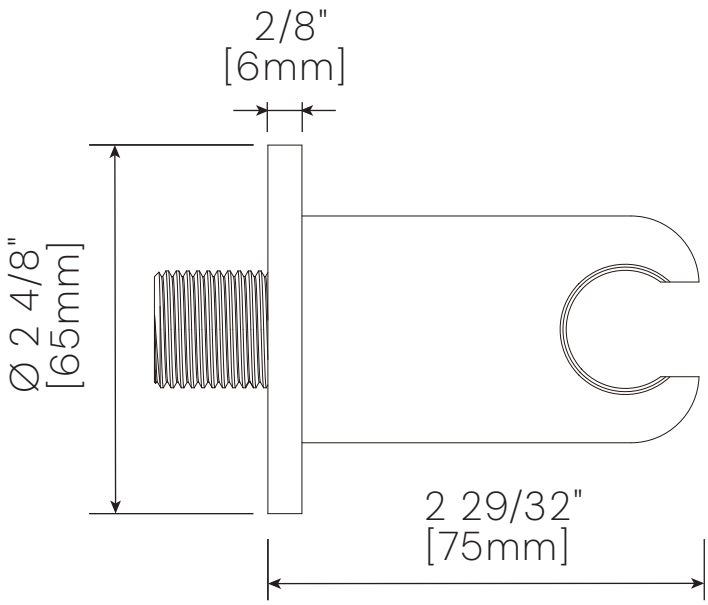

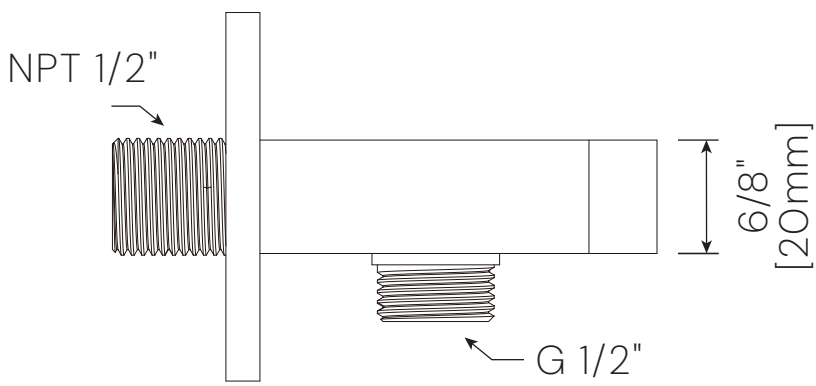

FEATURES

- All Metal Construction
  Durable metal build, superior strength and long-lasting reliability.
- Easy Wipe Clean
  Chemical-free cleaning, effortless maintenance on frequently touched areas.

SPECIFICATION

- Inlet: NPT 1/2" male connection
- Outlet: G 1/2" male connection
- Finish Availability: Polished Chrome/Matte Black/Brushed Nickel/ Brushed Gold

WARRANTY

- Parts and Finish: Limited lifetime warranty for residential, or 10 years for commercial purchasers and multi-family (apartments and condominiums) residential, in each case from the date of purchase.

STANDARDS

- ASME A112.18.1/CSA B125.1

Cranach deserves the right to make changes in specifications and materials and to change or discontinue models both without notice or obligation. Dimensions are only for reference only.

ACCESSORIES

C90.SH01

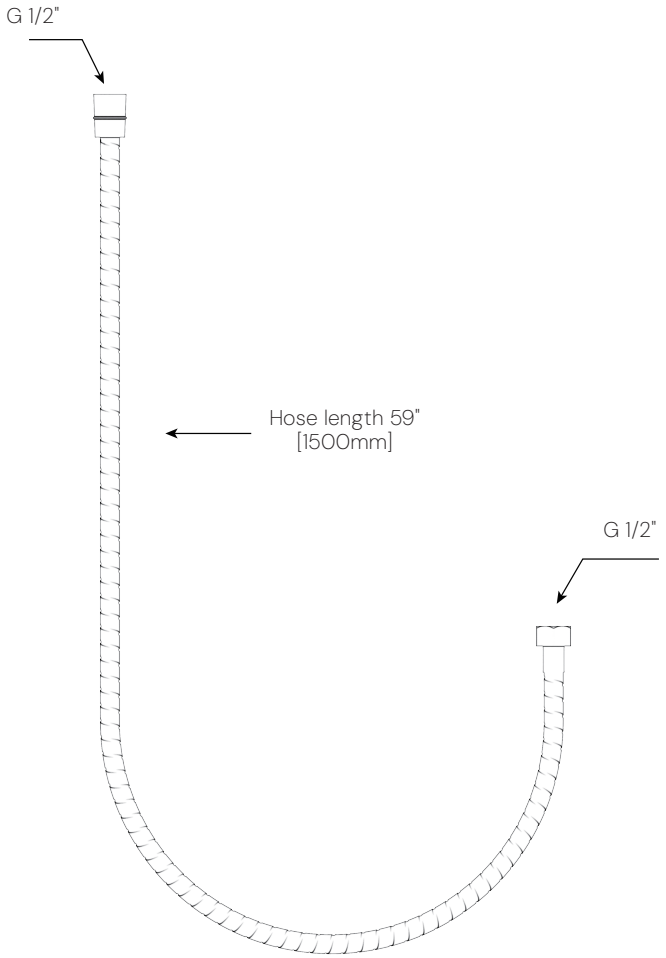

FEATURES

- All Metal Construction
  Durable metal build, superior strength and long-lasting reliability.

SPECIFICATION

- Outlet: G 1/2" female connection
- Inlet: G 1/2" female connection
- 59"(1500mm) length hose
- Finish Availability: Polished Chrome/Matte Black/Brushed Nickel/Brushed Gold

WARRANTY

- Parts and Finish: Limited lifetime warranty for residential, or 10 years for commercial purchasers and multi-family (apartments and condominiums) residential, in each case from the date of purchase.

STANDARDS

- ASME A112.18.1/CSA B125.1

Cranach deserves the right to make changes in specifications and materials and to change or discontinue models both without notice or obligation. Dimensions are only for reference only.