5FT Ottoman Bed

Assembly Instructions – Please keep for future reference

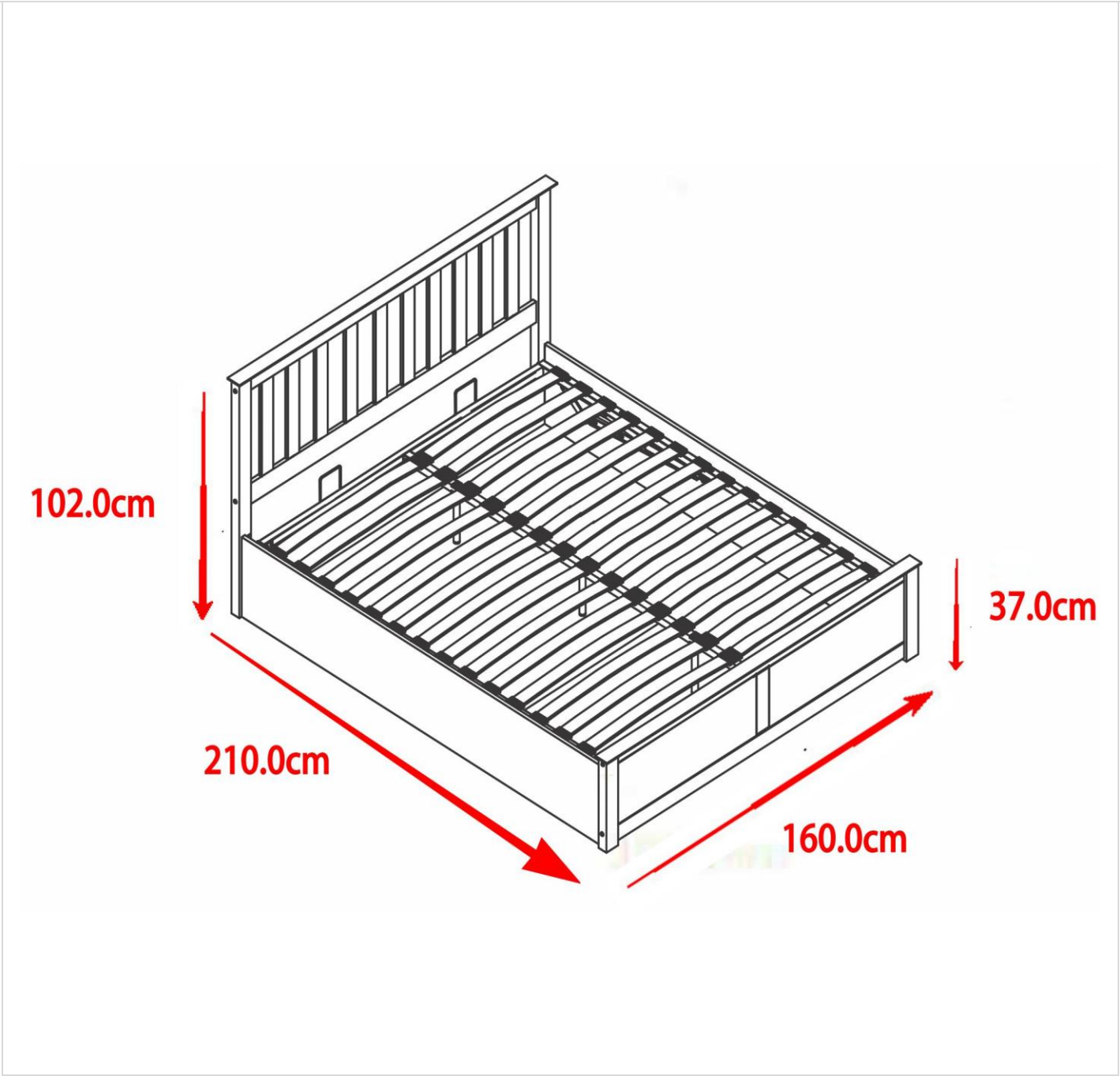

Dimensions	No. people	Assembly Time
Width: 160.0 cm Depth: 210.0 cm Height: 102.0 cm		60 mins (approx.)

Important

- PLEASE READ THESE INSTRUCTIONS FULLY BEFORE STARTING ASSEMBLY
- PLEASE DO NOT THROW THE PACKAGING AWAY UNTIL YOU ARE SATISFIED WITH PURCHASE, GOODS NEED TO BE RETURNED IN ORIGINAL PACKAGING.

Important – Please read these instructions fully before starting assembly

⚠ Safety and Care Advice

Important – Please read these instructions fully before starting assembly

- Check you have all the components, parts, hardware and tools listed on pages 3, 4.
- Remove all fittings from the plastic bags and separate them into their groups.
- Keep children and animals away from the work area, small parts could choke if swallowed.
- Make sure you have enough space to lay out the parts before starting.
- Do not stand or put weight on the product, this could cause damage.
- Assemble the item as close to its final position (in the same room) as possible.
- Assemble on a soft, level surface to avoid damaging the unit or your floor.
- We do not recommend the  use of power drill/drivers for inserting screws, as this could damage the unit. Only use hand screwdrivers.
- Dispose of all packaging carefully and responsibly.

HELPFUL HINTS

- Please read through the assembly instructions thoroughly before you begin.
- Check all fittings and panels against the parts list to ensure that you have everything before you start. In the unlikely event that any parts are missing, please contact your retailer immediately.
- Remove all fittings from the plastic bags and separate them into their groups in a bowl or other container to stop any small parts being lost.
- Do not use any tool that's not listed in these assembly instructions. The use of power tools is NOT advised, this could damage your product and cause over tightening to occur.
- Assemble the item as close to its final position (in the same room) as possible.
- Make sure you have enough space to layout the parts before starting.
- Assemble on a soft level surface to avoid damaging the unit or your floor.
- Parts of the assembly will be easier with 2 people. Look for this logo
- Check you have all the components and tools listed on the next page.

SAFETY

- Keep children and animals away from the work area, small parts could cause choking if swallowed.
- Dispose of all packaging carefully and responsibly.

Care and Maintenance

- Only clean using a damp cloth and mild detergent, do not use bleach or abrasive cleaners.
- From time to time check that there are no loose screws on this unit.
- This product should not be discarded with household waste. Take to your local authority waste disposal centre.

If you are unhappy with the product and wish to return it, please follow the retailer's returns procedure.

IMPORTANT INFORMATION

OTTOMAN OPERATING INSTRUCTIONS

Once your bed frame is completely assembled, the slat frame unit will not operate correctly unless a mattress is placed on the slat frame. Position the mattress onto the slat frame whilst it is in the closed position.

The pistons used in the construction of this product are extremely strong and cannot be operated by hand when not fitted to the ottoman hinges. All pistons are tested in the factory for correct pressure and operation before use.

Initially it might appear that the pistons are very stiff when opening and closing the ottoman frame, THIS IS NORMAL.

After operating the ottoman a few times, the movement of the pistons and the opening and closing of the ottoman will become easier.

PLEASE NOTE - It takes a lot of force to make the initial movement of the ottoman. **THIS IS A DESIGN FEATURE OF THE PRODUCT SO THAT IT DOES NOT FALL SHUT.** When the ottoman is almost shut, it will close completely under its own weight. The speed of closing depends on the weight of the mattress so always keep fingers clear of the frame. Periodically check and tighten bolts to ensure that the components are tight and secure.

When lowering the slat unit for the first time, take care to make sure it does not rub unevenly on the inside face of the Side Rail. If it does, the bed has been assembled slightly out of square. This can be rectified by moving the Footboard of the bed slightly to the left or right whilst leaving the headboard of the bed frame stationary.

If you are experiencing difficulty with the initial compression try fitting one piston at a time (following the Assembly Instructions) then press down on the side of the frame with the piston fitted - this acts like a big lever (The weight of the mattress can be used to supplement the load exerted). Effectively you are doubling the amount of force applied, because you have halved the resistance offered by the pistons. It can take slightly more effort than you might feel comfortable applying to the bed frame at first.

WARNING

For the safety of yourselves and others, please ensure that:

- **Children and pets are not left unattended when the frame is in the lifted position as they could become trapped inside the ottoman space.**
- **Please keep children and pets away from the ottoman bedstead whilst opening and closing the slat frame to avoid injury.**
- **The items store under the bed - i.e. the top of an item must not touch the underside of the mattress metal frame base or it may get damaged.**

ATTENTION
Important Notes
Regarding Gas Lifts

This information applies to all types of gas lift storage, regardless of the base top: boarded base ❶ or wooden slats ❷ and regardless of opening configuration: end opening ❶ / side opening ❷

NEVER OPEN OR CLOSE WITHOUT A MATTRESS ON TOP OR YOU RISK TWISTING THE FRAME, DAMAGING THE BED OR PERSONAL INJURY!

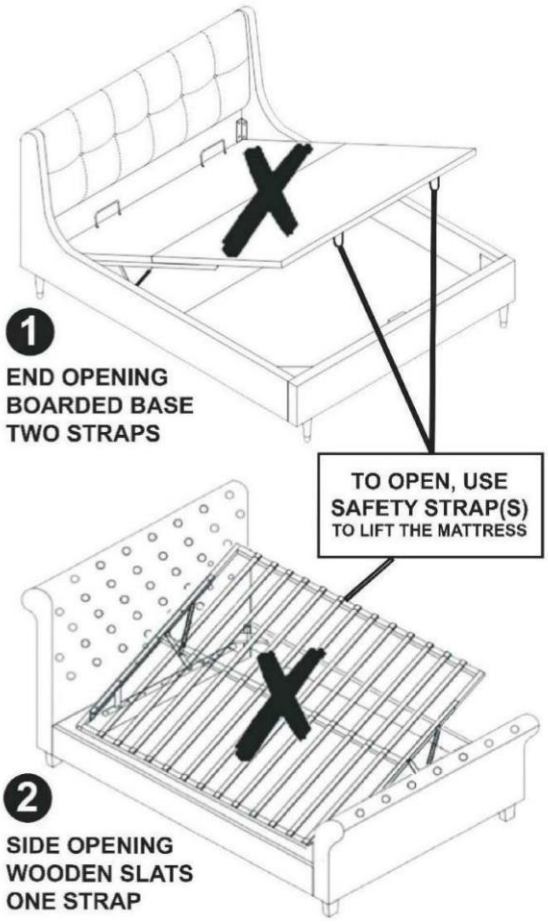

❶ END OPENING BOARDED BASE TWO STRAPS

❷ SIDE OPENING WOODEN SLATS ONE STRAP

❸ ONCE THE MATTRESS IS ON TOP, YOU CAN OPEN & CLOSE THE BED SAFELY ✓

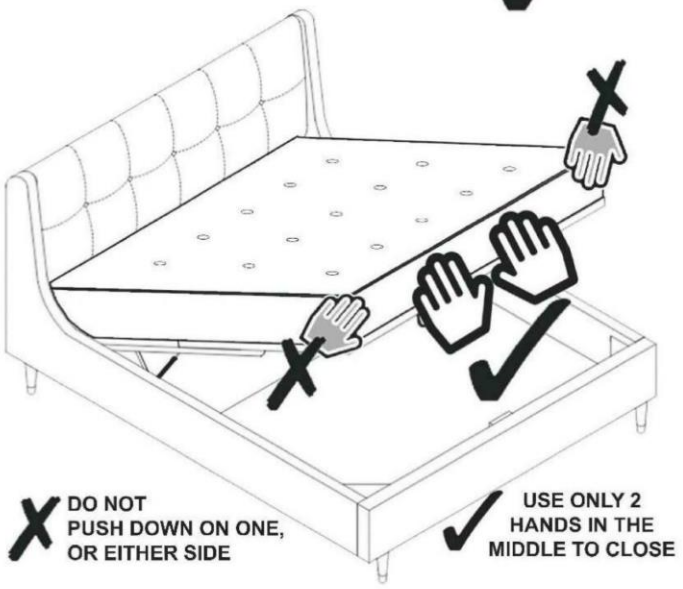

✗ DO NOT PUSH DOWN ON ONE, OR EITHER SIDE

✓ USE ONLY 2 HANDS IN THE MIDDLE TO CLOSE

Once all the nuts and bolts are tightened firmly, the first time you close the lifting mechanism, push down with extra pressure to force open the seals on the pistons.

This will feel like a lot of pressure, so be firm and it will close!

1. **NEVER operate without a mattress on top. Failure to do so will damage the bed.**
2. **Close by pushing down firmly, with both hands towards the centre, with equal pressure.**
3. **NEVER push down on only one side or edge, or you will damage your bed.**
4. **NEVER sleep on the bed frame without a mattress.**
5. **Please remember to re-tighten all nuts & bolts within the bed frame after 2 weeks of use.**

Hints and Tips

Failure to do so may result in injury.

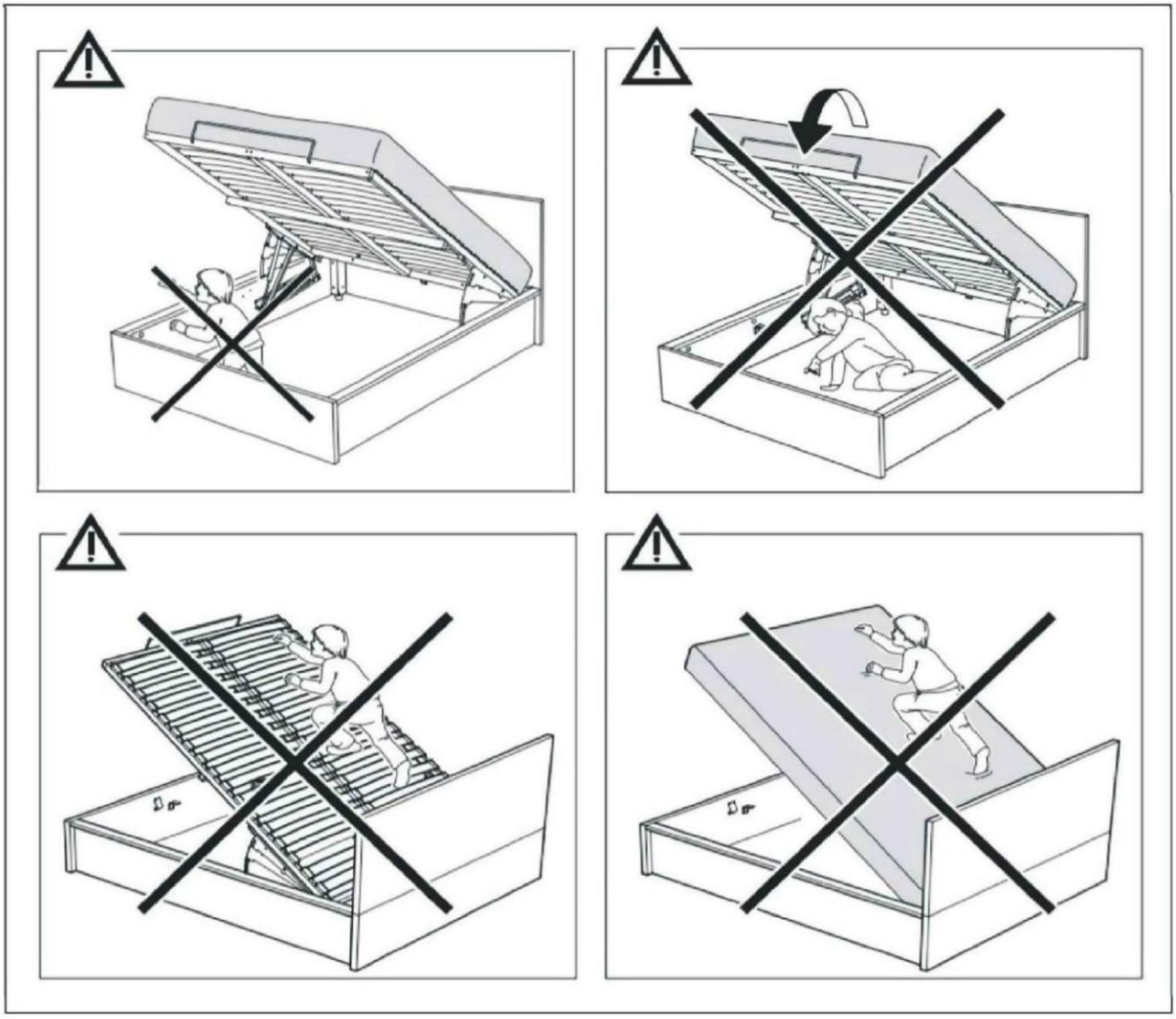

Bed frame must be in it's CLOSED position when moving the bed.

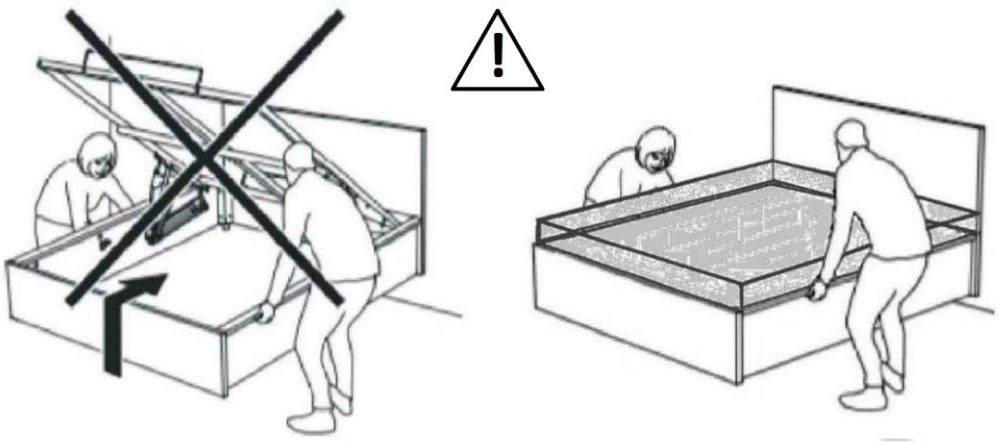

Hints and Tips

Failure to do so may result in injury.

To operate the ottoman, always use two hands at arm's length to push down on the bed frame end, in between the 2 rows of slats (as shown below) to close the bed frame.

To open, lift up using the nylon strap on the bed end.
You must always ensure the mattress is on the bed frame before lifting to open and close the bed frame.

The weight of the mattress loaded on the frame helps to close the bed frame easier and with less effort, also keep the frame in it's closed position until it is pulled upwards by the user.

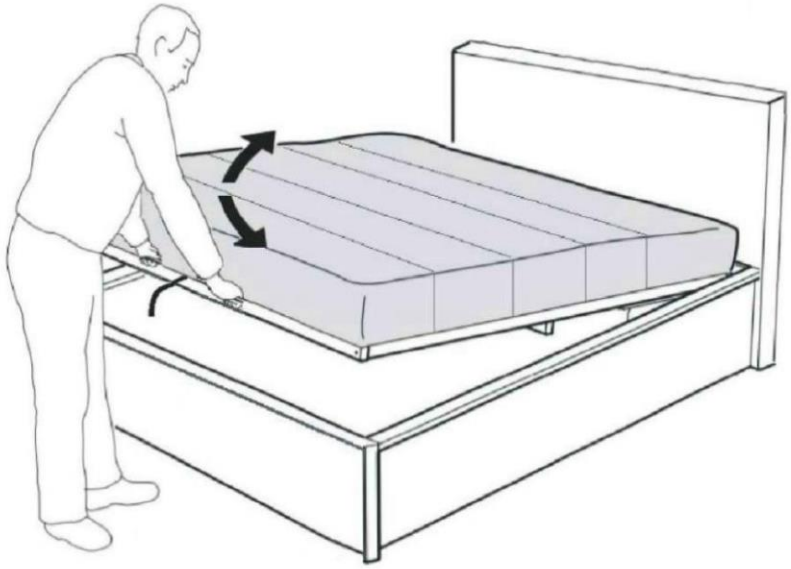



Components – Parts

Please check that you have all the components listed below before constructing your item.

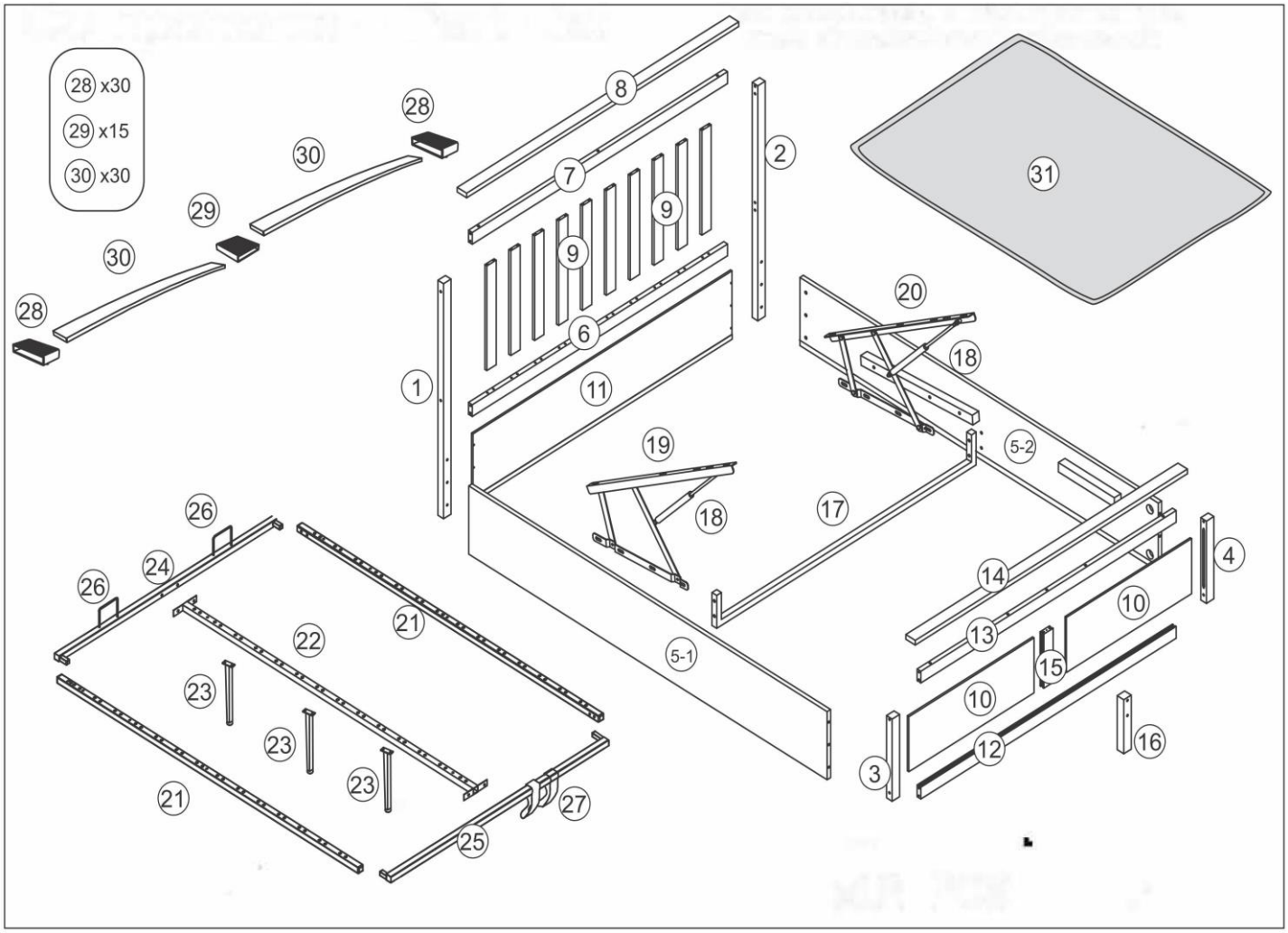

Components - Parts

Please check that you have all the components listed below before constructing your item.

Part No	Description	Qty
1	Headboard Post (Left)	1
2	Headboard Post (Right)	1
3	Footboard Post (Left)	1
4	Footboard Post (Right)	1
5-1	Side Rail (Left)	1
5-2	Side Rail (Right)	1
6	Headboard Bottom stretcher	1
7	Headboard Top Stretcher	1
8	Headboard Crown	1
9	Headboard Vertical Slats	10
10	Footboard Center Panel	2
11	Headboard Bottom Panel	1
12	Footboard Bottom Stretcher	1
13	Footboard Top Stretcher	1
14	Footboard Crown	1
15	Footboard Vertical Center Divider	1
16	Metal Frame Support	1
17	Side Rail Center Stretcher	1
18	Gas Lift Piston	2
19	Folding Mechanism (Left)	1
20	Folding Mechanism (Right)	1
21	Side Frame Rail	2
22	Centre Support Rail	1
23	Centre Support Leg	3
24	Head End Frame Rail	1
25	Foot End Frame Rail	1
26	Mattress Stopper	2
27	Lifting Handle Strap	1
28	End Slat Cap	30
29	Centre Slat Cap	15
30	Slat	30
31	Non-Woven Fabric	1

Components - Fixings

Please check that you have all the components listed below before constructing your item.

Note: The quantities below are the correct amount to complete the assembly. In some cases more fittings may be supplied than are required.

A x4 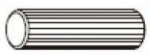 Wood Dowel Φ8x30mm	**B** x48  Wood Dowel Φ6x30mm	**C** x8  Bolt Φ6x70mm	**D** x9  Bolt M6x65mm	**E** x6  T-Nut
F x6  Bolt M6x50mm	**G** x4  Bolt M6x35mm	**H** x6  Stud M6x60mm	**J** x6  Nut M6	**K** x6  Half Moon Washer
L x1 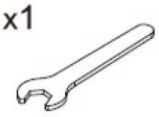 Spanner M6	**M** x1  Allen Key M4	**N** x8 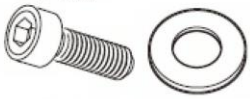 Bolt & Washer Φ8x20mm	**O** x24  Bolt Φ8x15mm	**P** x4  Nut M8
Q x1 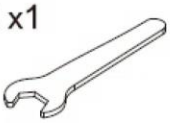 Spanner M10	**R** x1  Allen Key M5	**S** x2  Screw Φ4x50mm	**T** x1 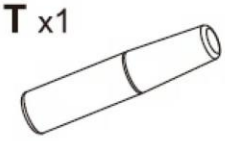 Wood Glue	**U** x6  Screw Φ4x20mm
I x1  Screw Driver (Not Provided)				

Tools Required



NOTE: SCREW DRIVER & HAMMER ARE NOT PROVIDED.

Ruler – Use this to measure your screws (mm)

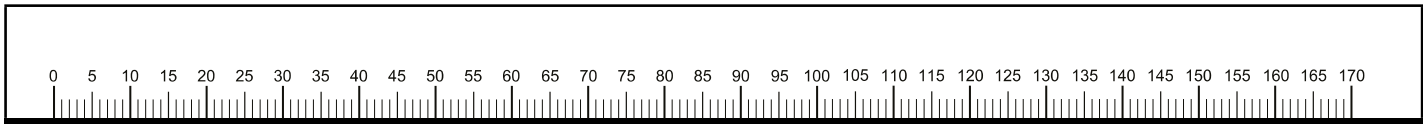

Important – Please read these instructions fully before starting assembly

Assembly Instructions

Step 01

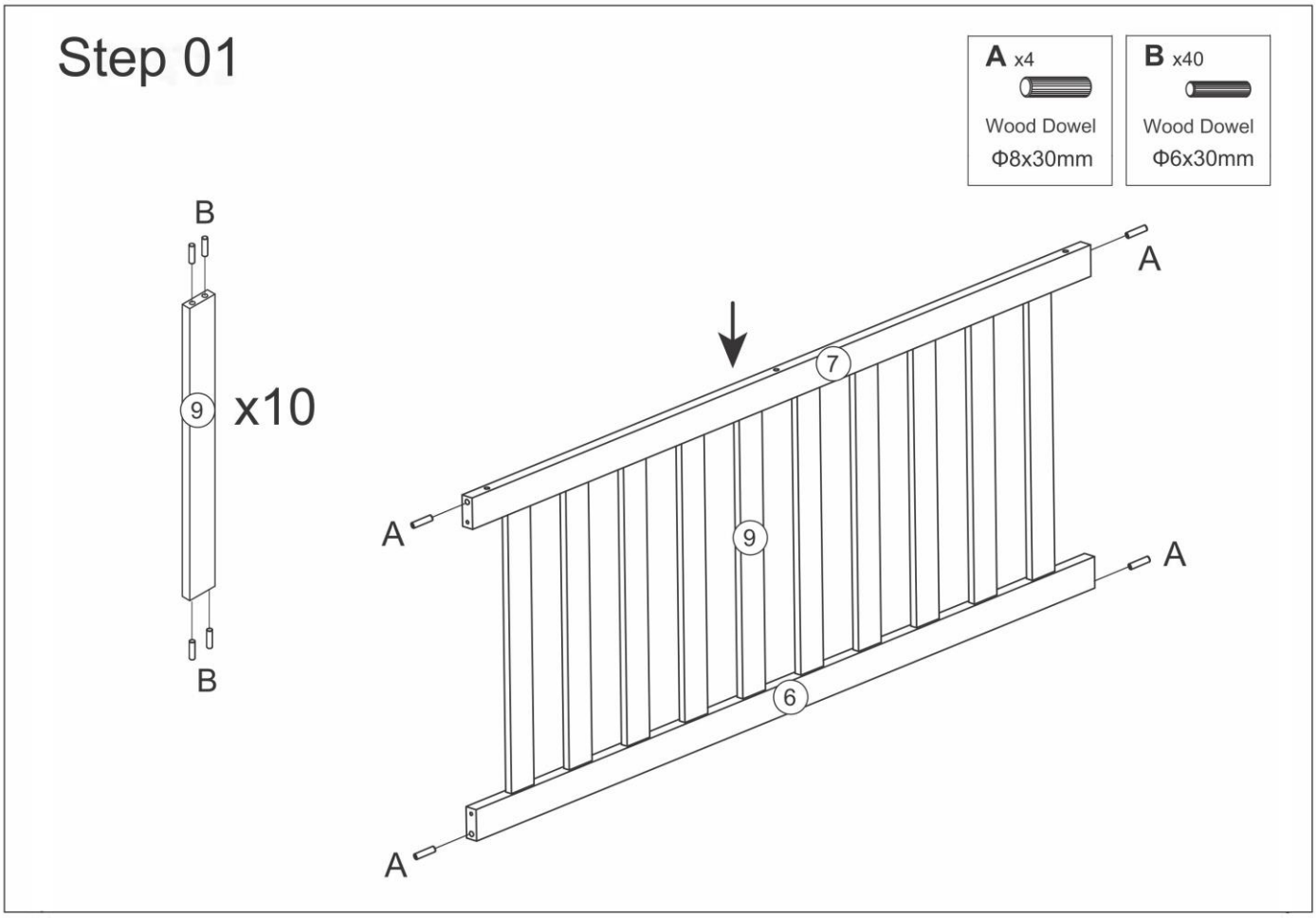

Step 02

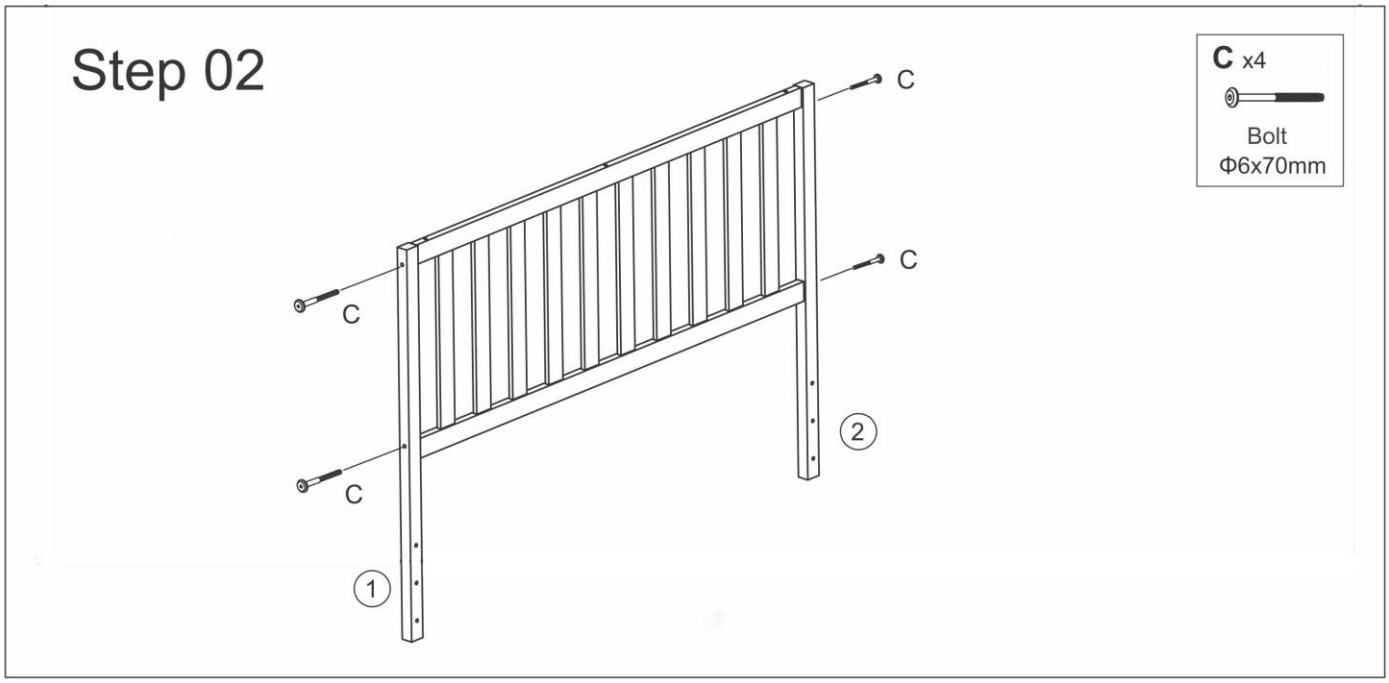

Step 03

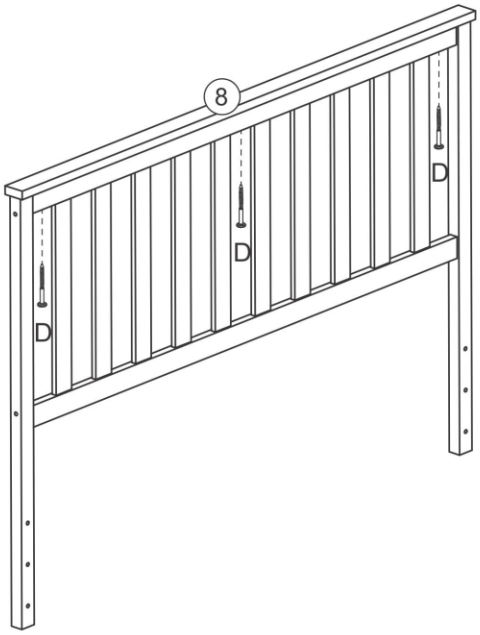

D x3



Bolt
M6x65mm

Step 04

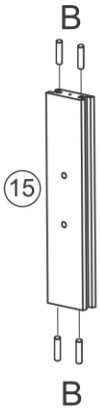

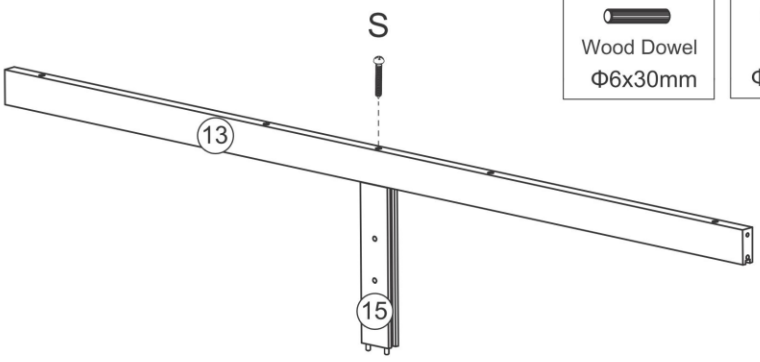

B x4

Wood Dowel
Φ6x30mm

S x1



Screw
Φ4x50mm

Step 05

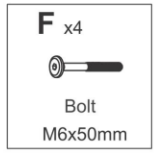

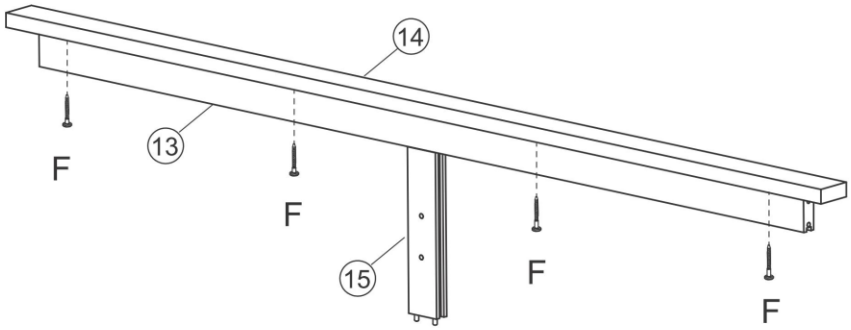

Step 06



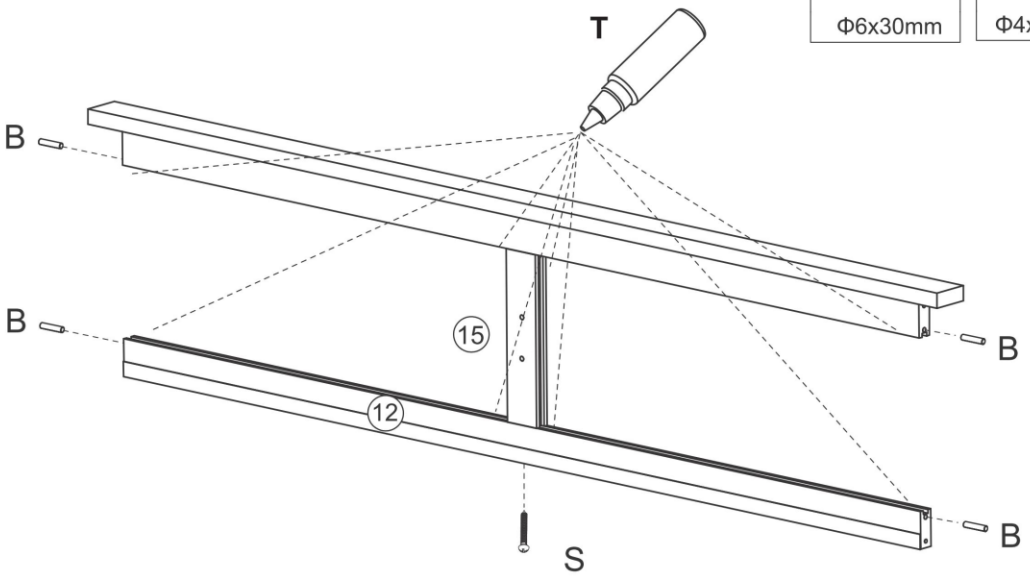

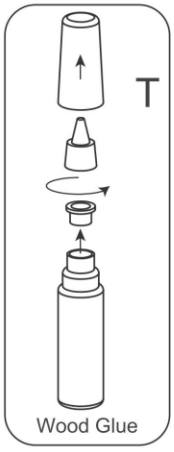

Step 07

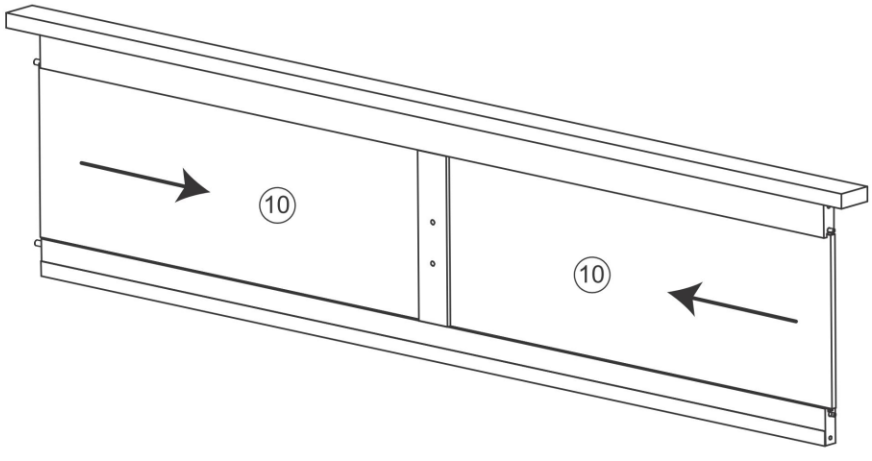

Step 08

C x4
Bolt
Φ6x70mm

H x6
Stud
M6x60mm

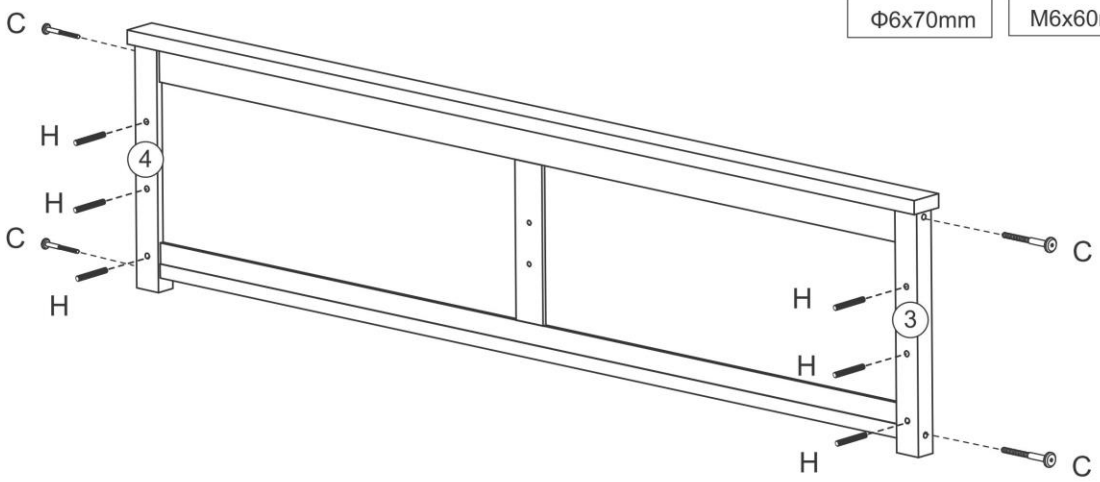

Step 09

Do Not Over Tighten
The Nut " **P** "

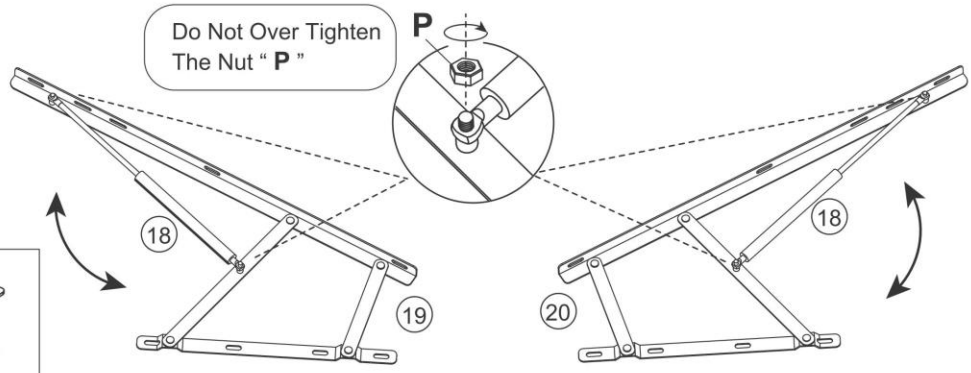

P x4
But
M8

Q x1
Spanner
M10

Step 10

N x8
Bolt & Washer
Φ8x20mm

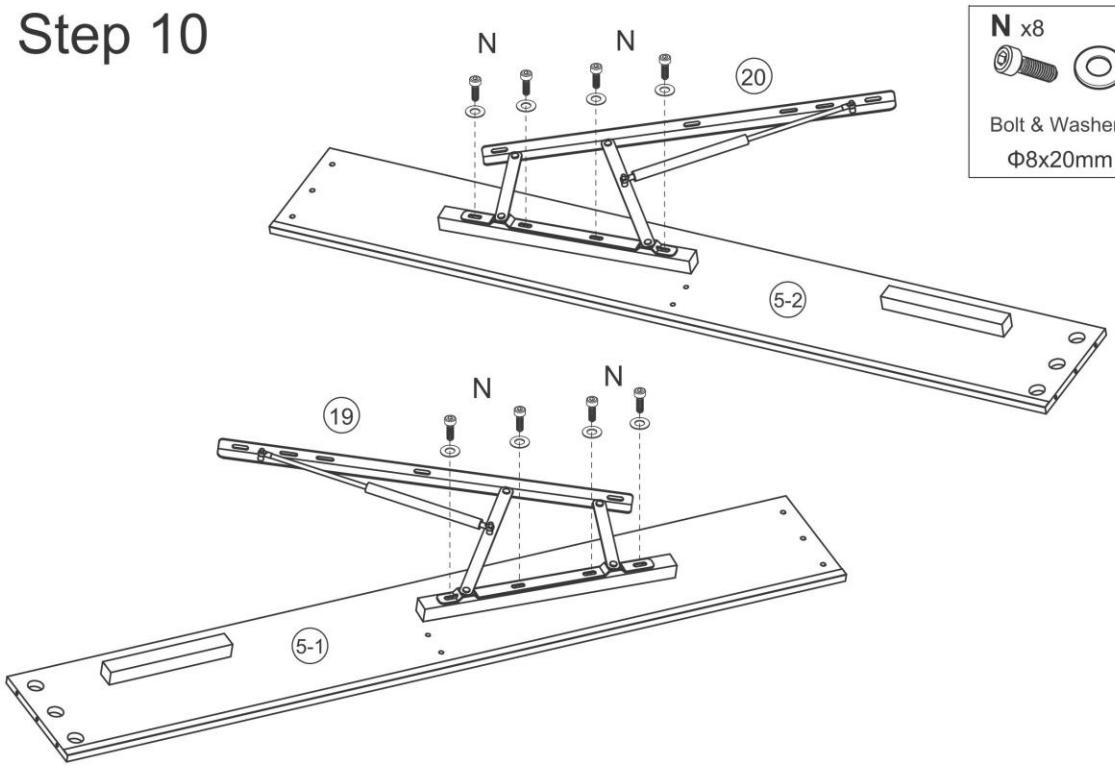

Step 11

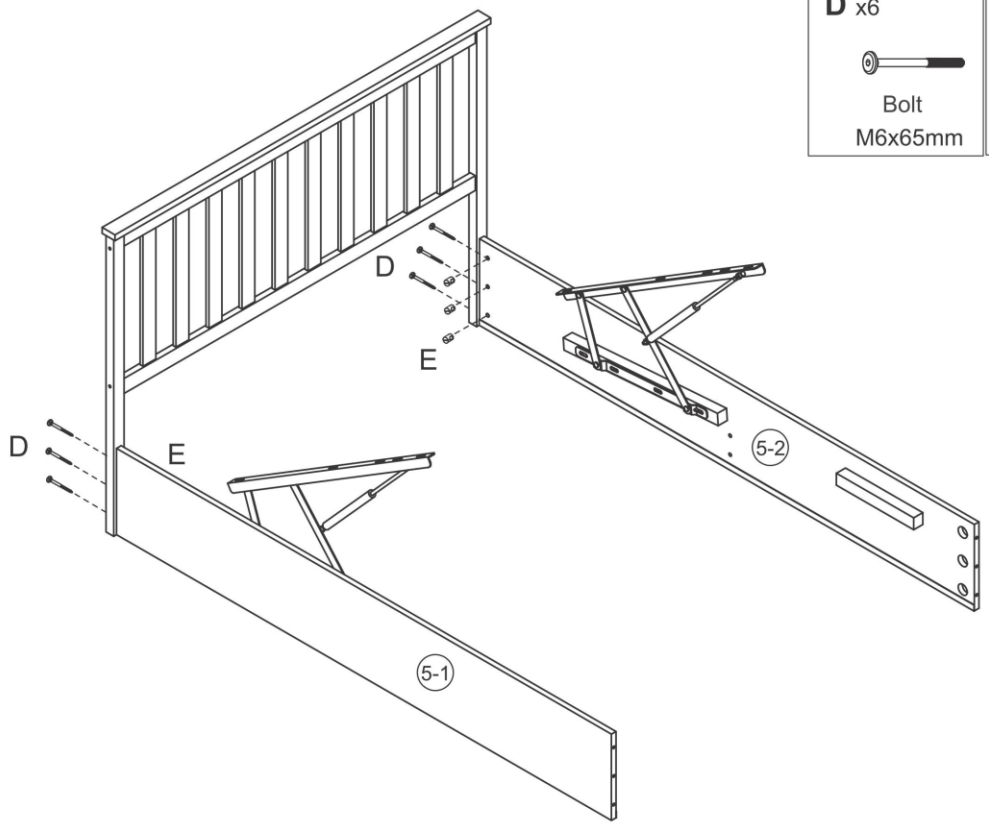

Step 12

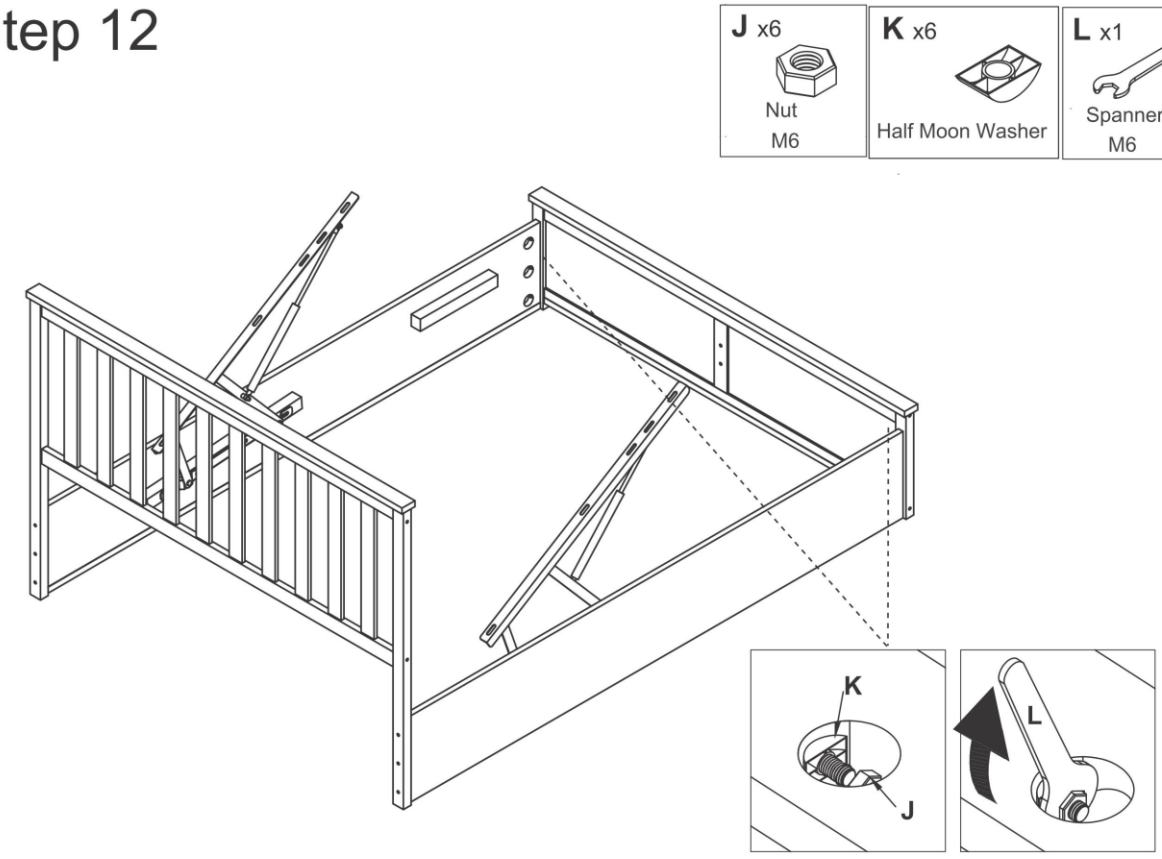

Step 13

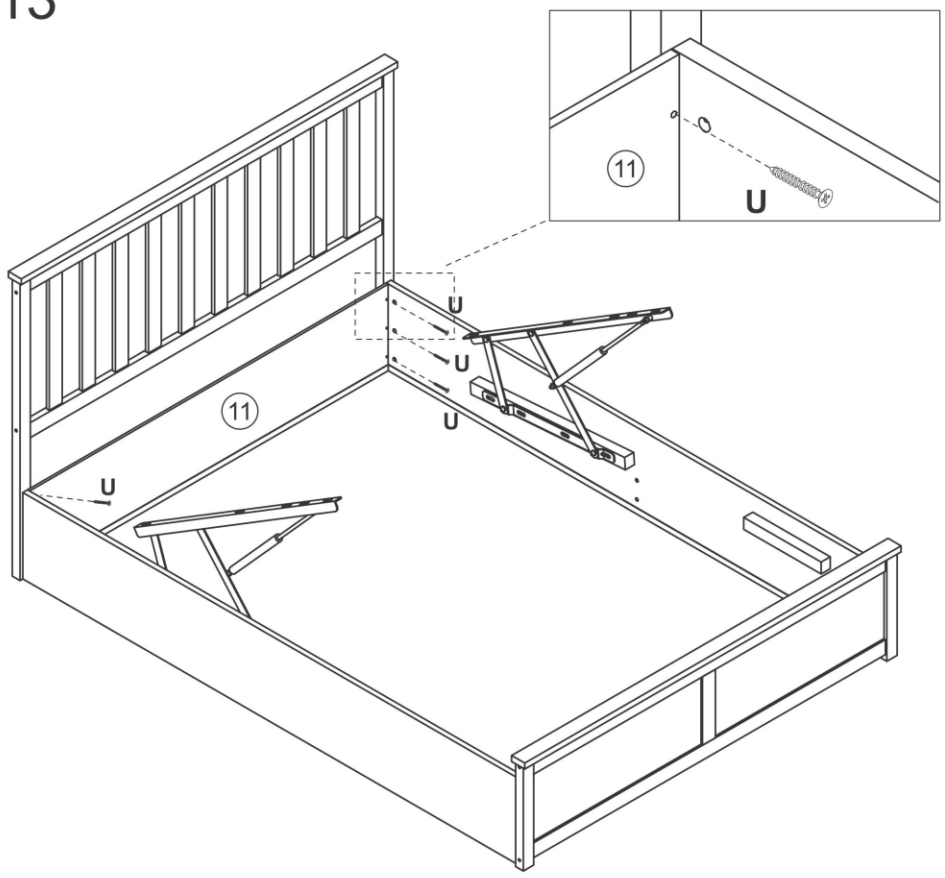

Step 14

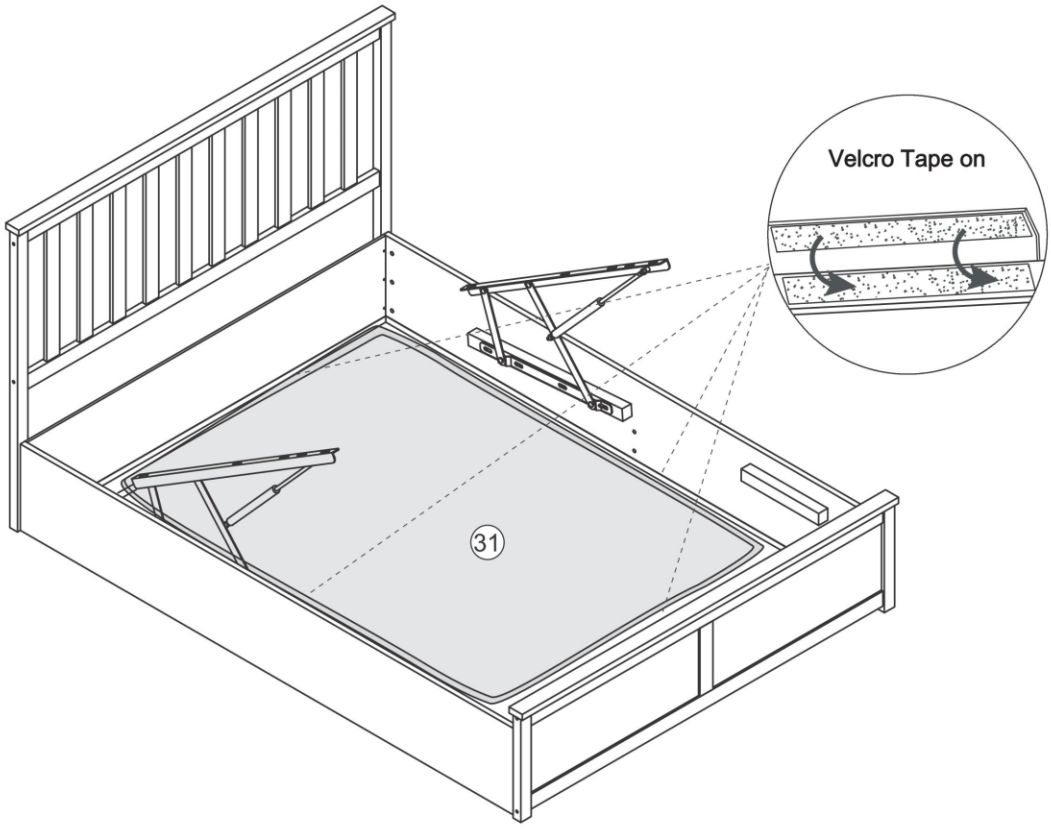

Step 15

G x4



Bolt

M6x35mm

F x2



Bolt

M6x50mm

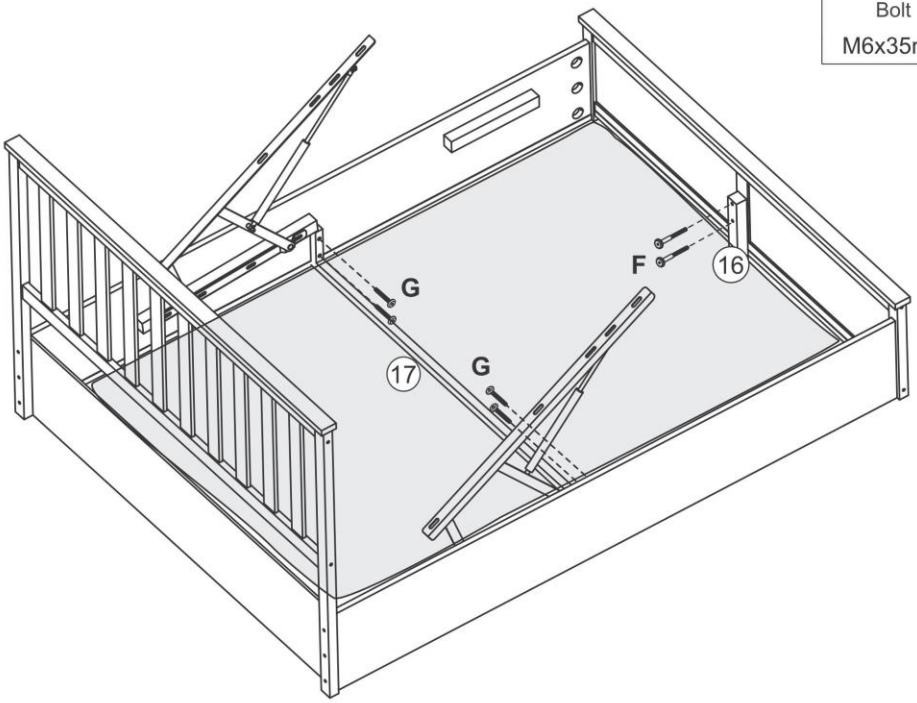

Step 16

O x12



Bolt

Φ8x15mm

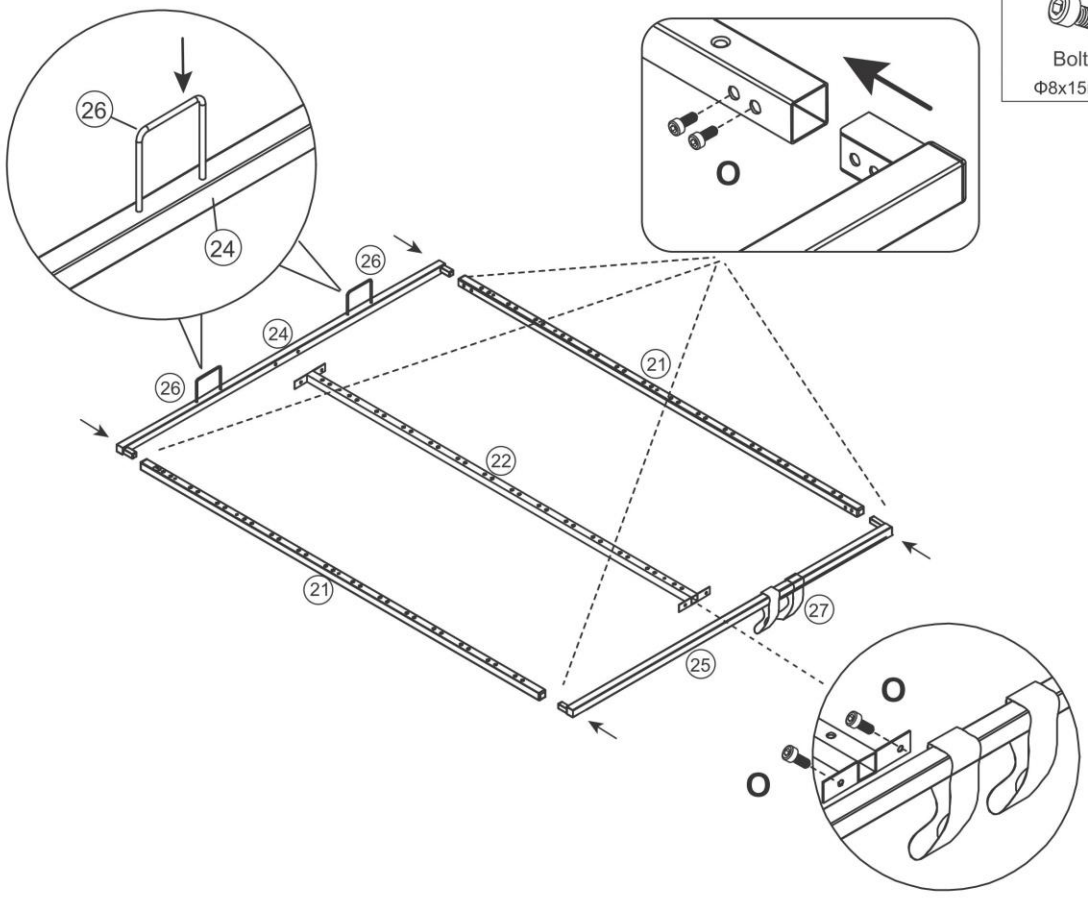

Step 17

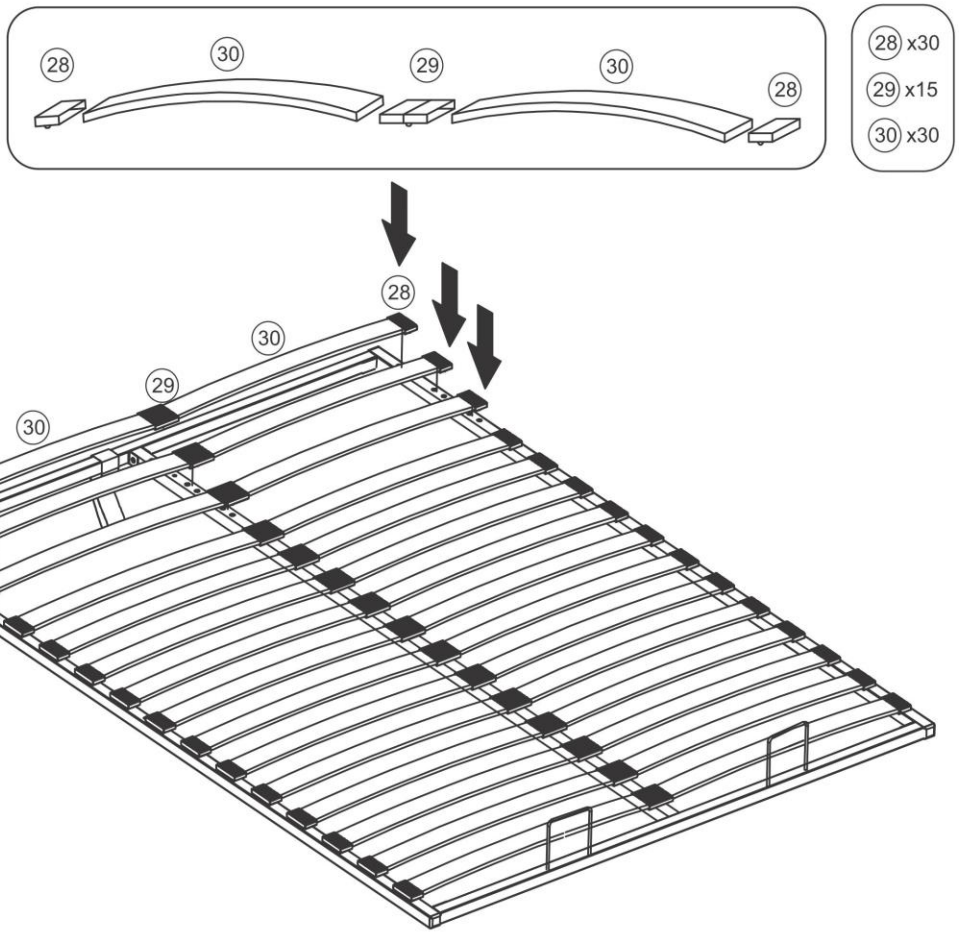

Step 18



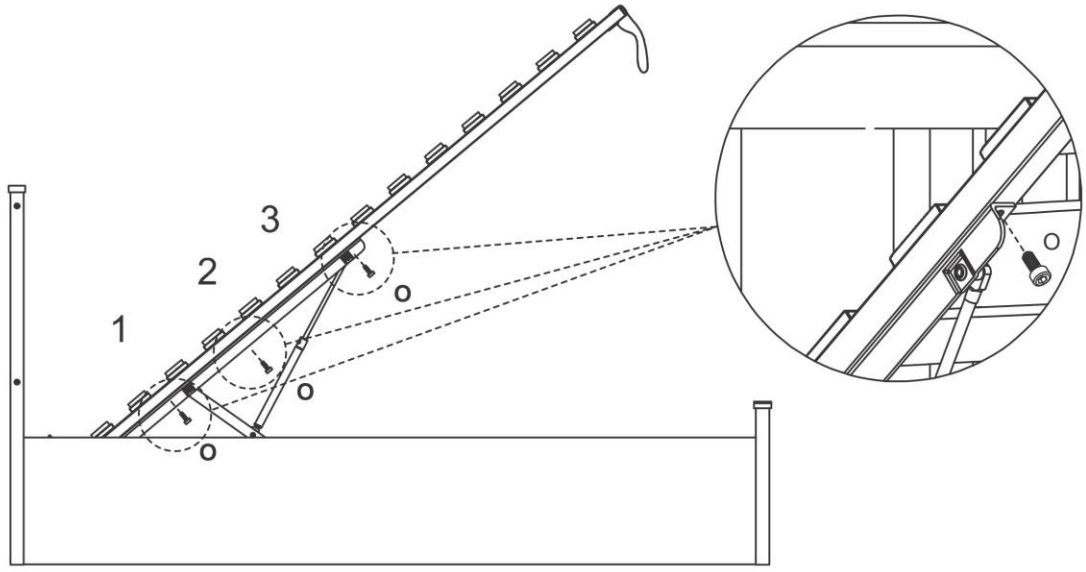

Step 19

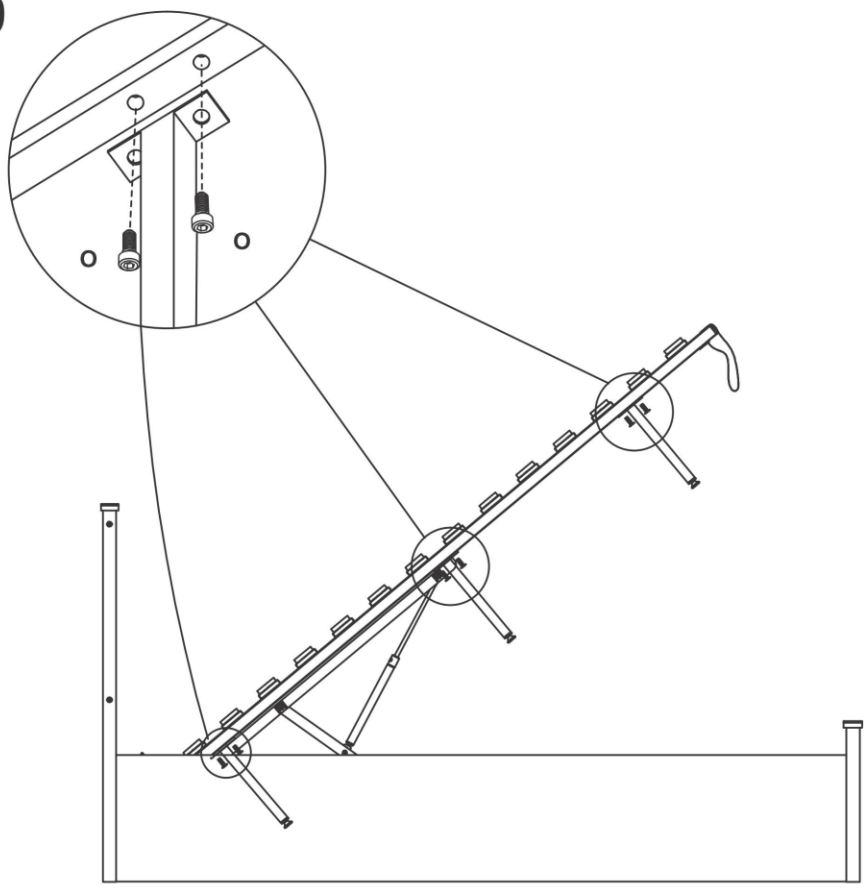

x6



Bolt

Φ8x15mm

Step 20

Assembly Complete

