ASSEMBLY INSTRUCTION

1

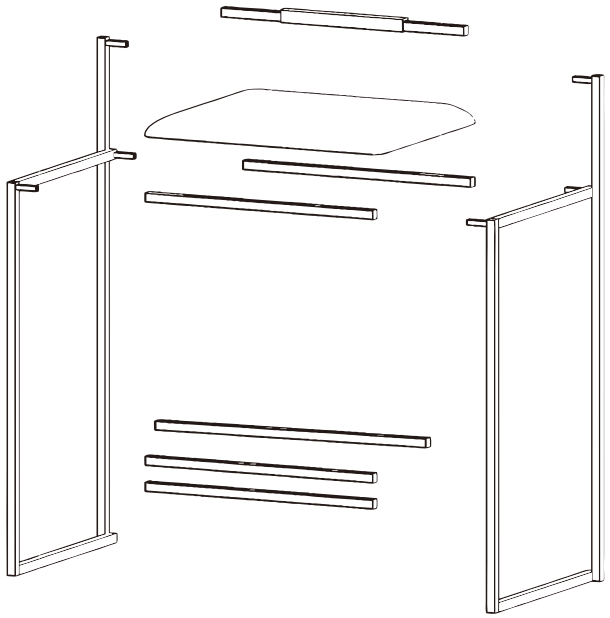

2

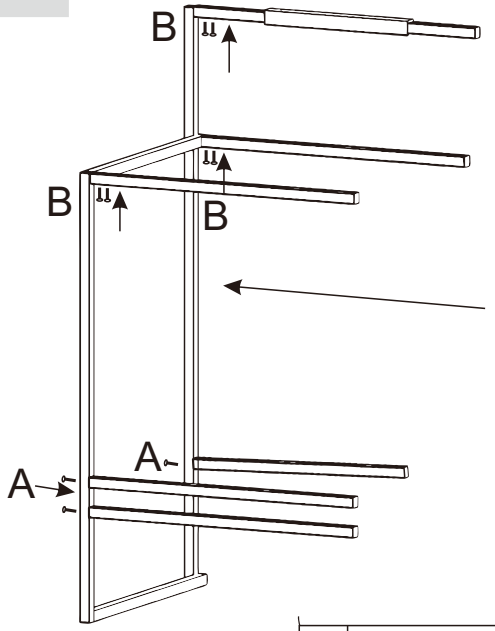

A	M6X35mm	3
B	M6X10mm	6

3

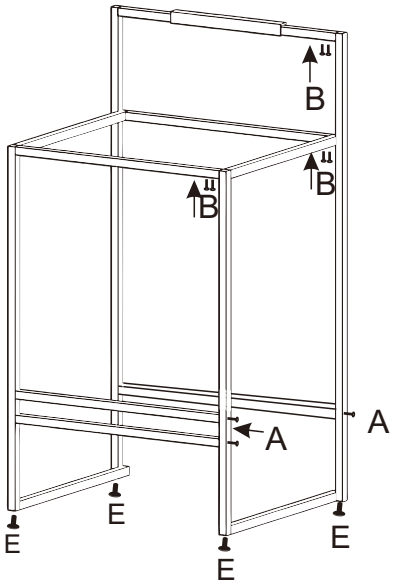

A	M6X35mm	3
B	M6X10mm	6
E	M6X20MM	4

4

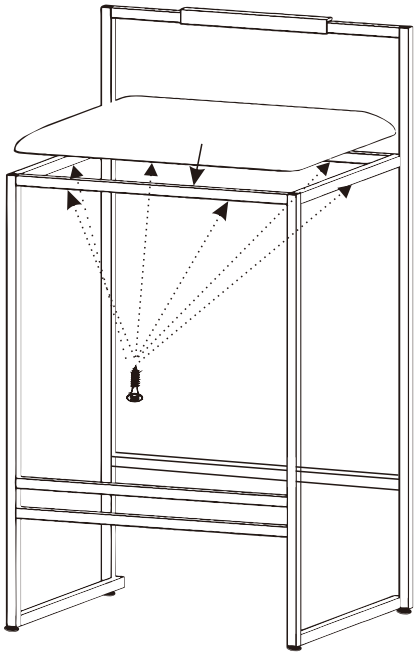

C	M4 x35mm	6